Document Title	Specification of Timing Extensions for Classic Platform
Document Category	Template specification (TPS)
Document UID	411
Document Status	published
Part of AUTOSAR Standard	Classic Platform
Part of Standard Release	R26-11

Document Change History

Date	Release	Changed by	Description
2026-11-26	R26-11	AUTOSAR Release Management	• See appendix G.19
2025-11-27	R25-11	AUTOSAR Release Management	• Removal of obsolete elements and TDEventTTCan feature • Mark appendices as informative/normative
2024-11-27	R24-11	AUTOSAR Release Management	• Major rework of SL-LET • Clarification of ordering of TimingDescriptionEventChain segments • Annotation of imposition times to constraints
2023-11-23	R23-11	AUTOSAR Release Management	• Change primitive type of maxSlots/maxCycles in repetitiveEOC • Improve identification and constraints of root in hierarchicalEOC • Introduce Intra-LET paradigms • Remove EOC.ignoreOrderAllowed
2022-11-24	R22-11	AUTOSAR Release Management	• Added SL-LET feature • Rework document structure
2021-11-25	R21-11	AUTOSAR Release Management	• Removed some obsolete elements • Corrected description of the attribute ExecutionOrder-Constraint.orderedElement • Corrected spelling errors and incorrect captions



△

2020-11-30	R20-11	AUTOSAR Release Management	• Added support for AUTOSAR Software Clusters and AUTOSAR Classic Platform Flexibility
2019-11-28	R19-11	AUTOSAR Release Management	• Replaced the verb ”must” by the verb ”shall” according to TPS_STDT_00053. • Corrected spelling errors, terminology, and removed empty pages • Changed attributes of TDEventFrameEthernet to be consistent with changes applied to ethernet communications. • Corrected splitkey definition in timingResource. • Revised section ”Occurrence Expression Language for Timing Events” to improve understanding of the purpose of complex timing description event, as well as the timing functions. • Changed Document Status from Final to published
2018-10-31	4.4.0	AUTOSAR Release Management	• Added support for Logical Execution Time • Added element SynchronizationPointConstraint • Removed constraint constr_4535 from specification. • Added element BswCompositionTiming
2017-12-08	4.3.1	AUTOSAR Release Management	• Editorial changes in chapter 6 and 7.
2016-11-30	4.3.0	AUTOSAR Release Management	• Added support for conditional timing • Added support for timing constraints for Ethernet communications • Added timing function to support mode dependency • Minor corrections / clarifications / editorial changes; For details please refer to the ChangeDocumentation

▽

△

2015-07-31	4.2.2	AUTOSAR Release Management	• Minor corrections and editorial changes • Added appendices C and D
2014-10-31	4.2.1	AUTOSAR Release Management	• Added the capability in Execution Order Constraint to reference RTE and BSW Events • Added description about how to specify time sets • Minor corrections / clarifications / editorial changes; For details please refer to the BWCStatement
2014-03-31	4.1.3	AUTOSAR Release Management	• Revised the entire contents of chapter ”Application Notes” • Applied editorial changes to section ”Repetitive Execution Order Constraint”
2013-10-31	4.1.2	AUTOSAR Release Management	• Clarified the semantics of jitter and removed ambiguities in the description of the Periodic Event Triggering Constraint. • Added AUTOSAR constraints in order to ensure specification of consistent Execution Order Constraints. • Added capability to specify logical successor relationships between runnable entities and groups of runnable entities. • Changed the prefix of timing functions from ”ARTE” to ”TIMEX” in order to be consistent with the AUTOSAR standard definitions. • Clarified the use of event types in the various timing views defined in the specification.

▽

△

2013-03-15	4.1.1	AUTOSAR Release Management	• Applied editorial changes in order to improve readability and comprehensibility of the contents of the document • Added VFB event type `TDEventTrigger` and extended `TDEventSwcInternalBehavior-TypeEnum` to indicate variable access of runnable entities • Extended the capability of `SynchronizationTiming-Constraint` to reference timing description events • Revised and extended the capabilities of `ExecutionOrderConstraint` to specify hierarchical and repetitive execution order constraints • Added the capability to specify blueprints of `VfbTiming`s • Added capabilities to reference timing description events in existing timing models and to support reuse of timing models, as well as AUTOSAR methodology
2011-12-22	4.0.3	AUTOSAR Release Management	• Added new timing constraint types `AgeConstraint` and `ExecutionTimeConstraint` • Added occurrence expression language for `TimingDescriptionEvent`s • Improved `TDEventModeDeclaration`, `BurstPatternEventTriggering` and `SwcTiming`
2011-04-15	4.0.2	AUTOSAR Release Management	• Dropped `InstanceRefs` and replaced with `ComponentInComposition-InstanceRef` • Restricted the semantics of `ExecutionOrderConstraint` and `OffsetTimingConstraint` • Parameterize the observable event 'FlexRayClusterCycleStart' by defining the cycle repetition

▽

△

2009-12-18	4.0.1	AUTOSAR Release Management	• Initial Release

Disclaimer

This work (specification and/or software implementation) and the material contained in it, as released by AUTOSAR, is for the purpose of information only. AUTOSAR and the companies that have contributed to it shall not be liable for any use of the work.

The material contained in this work is protected by copyright and other types of intellectual property rights. The commercial exploitation of the material contained in this work requires a license to such intellectual property rights.

This work may be utilized or reproduced without any modification, in any form or by any means, for informational purposes only. For any other purpose, no part of the work may be utilized or reproduced, in any form or by any means, without permission in writing from the publisher.

The work has been developed for automotive applications only. It has neither been developed, nor tested for non-automotive applications.

The word AUTOSAR and the AUTOSAR logo are registered trademarks.

Table of Contents

1 Introduction 16
1.1 Overview . . . 16
1.2 Approach . . . 16
1.3 Scope . . . 16
1.4 Document Conventions . . . 17
2 Modeling 20
2.1 TimingExtensions (Timing Views) . . . 21
2.1.1 VfbTiming . . . 22
2.1.2 SwcTiming . . . 24
2.1.3 SystemTiming . . . 25
2.1.4 BswModuleTiming and BswCompositionTiming . . . 27
2.1.4.1 BswModuleTiming . . . 27
2.1.4.2 BswCompositionTiming . . . 28
2.1.5 EcuTiming . . . 29
2.2 Timing Conditions . . . 31
2.3 TimingDescription . . . 40
2.3.1 TimingDescriptionEventChain . . . 41
2.3.1.1 Segments . . . 43
2.3.1.2 Approach . . . 44
2.3.1.2.1 Decomposition . . . 45
2.3.1.2.2 Composition . . . 45
2.3.1.3 Patterns . . . 46
2.3.1.3.1 Sequence . . . 46
2.3.1.3.2 Fork . . . 47
2.3.1.3.3 Join . . . 48
2.3.1.3.4 Alternative . . . 48
2.3.1.3.5 Cycle . . . 49
2.3.2 TimingDescriptionEvent . . . 50
2.3.2.1 TDEventVfb . . . 51
2.3.2.1.1 TDEventVfbReference . . . 53
2.3.2.1.2 TDEventVfbPort . . . 53
2.3.2.1.2.1 TDEventVariableDataPrototype . . . 55
2.3.2.1.2.2 TDEventOperation . . . 56
2.3.2.1.2.3 TDEventModeDeclaration . . . 58
2.3.2.1.2.4 TDEventTrigger . . . 59
2.3.2.1.2.5 Blueprinting TDEventVfbPort . . . 60
2.3.2.2 TDEventSwc . . . 61
2.3.2.2.1 TDEventSwcInternalBehavior . . . 62
2.3.2.2.1.1 TDEventSwcInternalBehaviorTypeEnum . . . 64
2.3.2.3 TDEventCom . . . 65
2.3.2.3.1 TDEventISignal . . . 67

2.3.2.3.2 TDEventIPdu . . . 68
2.3.2.3.3 TDEventFrame . . . 69
2.3.2.3.4 TDEventComEthernet . . . 71
2.3.2.3.5 TDEventCycleStart . . . 73
2.3.2.3.5.1 TDEventFrClusterCycleStart . . . 73
2.3.2.4 TDEventBswInternalBehavior . . . 73
2.3.2.4.1 TDEventBswInternalBehaviorTypeEnum . . . 74
2.3.2.5 TDEventBsw . . . 75
2.3.2.5.1 TDEventBswModule . . . 76
2.3.2.5.2 TDEventBswModeDeclaration . . . 77
2.3.2.6 TDEventComplex . . . 78
2.3.2.7 TDEventOccurrenceExpression . . . 79
2.3.2.7.1 TDEventOccurrenceExpressionFormula . . . 81
2.3.2.7.2 TDEventOccurrenceExpressionVariable . . . 83
2.3.2.7.3 TDEventOccurrenceExpressionArgument . . . 84
2.3.2.7.4 TDEventOccurrenceExpression.function==CONTENT_-FILTER . . . 86
2.3.2.7.5 TDEventOccurrenceExpression.function==COMPLEX_-EVENT . . . 87
2.3.2.7.5.1 Example . . . 90
2.3.2.8 Time Base Referencing for Timing Description Events . . . 91
2.4 TimingConstraint . . . 91
2.4.1 TimingConstraints on TimingDescriptionEvents . . . 92
2.4.1.1 SynchronizationTimingConstraint . . . 93
2.4.1.2 EventTriggeringConstraint . . . 95
2.4.1.2.1 PeriodicEventTriggering . . . 95
2.4.1.2.2 SporadicEventTriggering . . . 100
2.4.1.2.3 ConcretePatternEventTriggering . . . 101
2.4.1.2.4 BurstPatternEventTriggering . . . 104
2.4.1.2.5 ArbitraryEventTriggering . . . 106
2.4.1.3 OffsetTimingConstraint . . . 108
2.4.1.4 AgeConstraint . . . 110
2.4.2 TimingConstraints on TimingDescriptionEventChains . . . 111
2.4.2.1 SynchronizationTimingConstraint . . . 112
2.4.2.2 LatencyTimingConstraint . . . 115
2.4.2.2.1 LatencyConstraintTypeEnum . . . 115
2.4.2.2.1.1 LatencyConstraintTypeEnum==age . . . 116
2.4.3 TimingConstraints on ExecutableEntities . . . 119
2.4.3.1 ExecutionOrderConstraint . . . 119
2.4.3.1.1 Precedence and Succeedence . . . 124
2.4.3.1.2 Executables and Events . . . 125
2.4.3.1.3 ExecutionOrderConstraintType-Enum==ordinaryEOC . . . 126

2.4.3.1.4 ExecutionOrderConstraintType-Enum==hierarchicalEOC . . . 128
2.4.3.1.5 ExecutionOrderConstraintType-Enum==repetitiveEOC . . . 131
2.4.3.2 ExecutionTimeConstraint . . . 135
2.4.3.2.1 Core Execution Time . . . 135
3 Methodology 138
3.1 Logical Execution Time . . . 138
3.1.1 LET Interval Definition . . . 138
3.1.2 Relation between LET Intervals . . . 140
3.1.3 Executable Entity Cluster to LET Interval mapping . . . 145
3.1.4 Data flow within an LET Interval . . . 148
3.2 System Level Logical Execution Time . . . 150
3.2.1 SL-LET Interval Definition . . . 150
3.2.1.1 Execution Order . . . 152
3.2.2 SL-LET Time Zones . . . 152
3.2.2.1 SL-LET Zone Clocks . . . 154
3.2.2.2 SL-LET Zone Clock Accuracy . . . 154
3.3 Classic Platform Software Clusters . . . 155
3.3.1 Specifying a Dispatcher . . . 156
3.3.2 Specifying Timing Parameters of a Dispatcher . . . 158
3.3.3 Mapping Executable Entities to a Dispatcher . . . 159
3.3.4 Mappings between Software Clusters . . . 160
3.3.5 Example . . . 163
A Reference Material 165
A.1 Terms and Abbreviations . . . 165
A.2 Imposition Times . . . 166
B Test Cases 167
B.1 Component integration . . . 167
B.1.1 VFB view . . . 168
B.1.2 ECU view . . . 169
B.2 Engine control . . . 169
B.2.1 Timing Requirements . . . 171
B.2.1.1 Formal description of timing constraints in view VfbTiming . . . 172
B.2.1.1.1 Requirement_1 . . . 172
B.2.1.1.2 Requirement_2 . . . 173
B.2.1.1.3 Requirement_3 . . . 173
B.2.1.2 Formal description of timing constraints in view EcuTiming . . . 174
B.2.1.2.1 Requirement_4 . . . 174
B.2.1.3 Formal description of timing constraints in view SwcTiming . . . 175
B.2.1.3.1 Requirement_5 . . . 175
B.3 Describing and Constraining Sensor and Actuator Timing . . . 176

B.3.1 External Event of a Sensor accessed via S/R . . . 176
B.3.2 External Event of an Actuator accessed via S/R . . . 177
B.3.3 External Event of a Sensor accessed via C/S . . . 177
B.3.4 External Event of an Actuator accessed via C/S . . . 177
B.3.5 Considering hardware I/O latency of EventChains at VFB-level . . . 178
B.3.5.1 Input latency . . . 178
B.3.5.2 Output latency . . . 178
B.3.6 Constraining Input or Output Latency . . . 178
C ARXML Listings 179
C.1 Variant Handling . . . 179
C.2 Logical Execution Time . . . 182
C.2.1 Logical Execution Time - Timing descriptions . . . 182
C.2.2 Logical Execution Time - Timing constraints - Latency Timing . . . 182
C.2.3 Logical Execution Time - Timing constraints - Event Triggering . . . 182
C.2.4 Logical Execution Time - Timing constraints - Event Triggering - Gap 183
C.2.5 Logical Execution Time - Timing constraints - Offset Timing - Without 183
C.2.6 Logical Execution Time - Timing constraints - Offset Timing - With . 184
C.2.7 Logical Execution Time - Timing constraints - Offset Timing - Arbitrary 184
C.2.8 Logical Execution Time - Timing constraints - Offset Timing - Arbitrary Overlap . . . 185
C.2.9 Logical Execution Time - Timing constraints - Execution Order . . . 186
C.3 Software Cluster . . . 187
C.3.1 Software Cluster - Timing descriptions . . . 187
C.4 System Level Logical Execution Time . . . 190
C.4.1 System Level Logical Execution Time . . . 190
C.5 TDEventOccurrenceExpression . . . 193
C.5.1 TDEventOccurrenceExpression - Filter Expression . . . 193
C.5.2 TDEventOccurrenceExpression - Grammar . . . 195
C.6 Test Cases . . . 195
C.6.1 Test Cases - VFB Elements . . . 195
C.6.2 Test Cases - VFB Timing - Latency Constraints . . . 196
C.6.3 Test Cases - VFB Timing - Execution Order Constraints . . . 197
C.6.4 Test Cases - COM Frame Timing . . . 197
C.6.5 Test Cases - COM Frame Timing - Timing Description Event Chain . 197
C.6.6 Test Cases - COM Frame Timing - Latency Constraint . . . 197
C.7 Test Cases - Engine Control . . . 198
C.7.1 Test Cases - Engine Control - `Requirement_1` . . . 198
C.7.2 Test Cases - Engine Control - `Requirement_2` . . . 200
C.7.3 Test Cases - Engine Control - `Requirement_3` . . . 201
C.7.4 Test Cases - Engine Control - `Requirement_4` . . . 202
C.7.5 Test Cases - Engine Control - `Requirement_5` . . . 204
D Mentioned Class Tables 206

E Non-splitable elements in the scope of this document 263

F Variation Points in the Scope of this Document 264

G Change History 265
G.1 Changes in AUTOSAR release R4.0.1 . . . 265
G.1.1 Added Specification Items in Release R4.0.1 . . . 265
G.1.2 Changed Specification Items in Release R4.0.1 . . . 265
G.1.3 Deleted Specification Items in Release R4.0.1 . . . 265
G.1.4 Added Constraints in Release R4.0.1 . . . 265
G.1.5 Changed Constraints in Release R4.0.1 . . . 265
G.1.6 Deleted Constraints in Release R4.0.1 . . . 265
G.2 Changes in AUTOSAR release R4.0.2 . . . 266
G.2.1 Added Specification Items in Release R4.0.2 . . . 266
G.2.2 Changed Specification Items in Release R4.0.2 . . . 266
G.2.3 Deleted Specification Items in Release R4.0.2 . . . 266
G.2.4 Added Constraints in Release R4.0.2 . . . 266
G.2.5 Changed Constraints in Release R4.0.2 . . . 266
G.2.6 Deleted Constraints in Release R4.0.2 . . . 266
G.3 Changes in AUTOSAR release R4.0.3 . . . 266
G.3.1 Added Specification Items in Release R4.0.3 . . . 266
G.3.2 Changed Specification Items in Release R4.0.3 . . . 268
G.3.3 Deleted Specification Items in Release R4.0.3 . . . 268
G.3.4 Added Constraints in Release R4.0.3 . . . 268
G.3.5 Changed Constraints in Release R4.0.3 . . . 268
G.3.6 Deleted Constraints in Release R4.0.3 . . . 268
G.4 Changes in AUTOSAR release R4.1.1 . . . 269
G.4.1 Added Specification Items in Release R4.1.1 . . . 269
G.4.2 Changed Specification Items in Release R4.1.1 . . . 269
G.4.3 Deleted Specification Items in Release R4.1.1 . . . 269
G.4.4 Added Constraints in Release R4.1.1 . . . 269
G.4.5 Changed Constraints in Release R4.1.1 . . . 270
G.4.6 Deleted Constraints in Release R4.1.1 . . . 270
G.5 Changes in AUTOSAR release R4.1.2 . . . 270
G.5.1 Added Specification Items in Release R4.1.2 . . . 270
G.5.2 Changed Specification Items in Release R4.1.2 . . . 270
G.5.3 Deleted Specification Items in Release R4.1.2 . . . 271
G.5.4 Added Constraints in Release R4.1.2 . . . 271
G.5.5 Changed Constraints in Release R4.1.2 . . . 271
G.5.6 Deleted Constraints in Release R4.1.2 . . . 271
G.6 Changes in AUTOSAR release R4.1.3 . . . 271
G.6.1 Added Specification Items in Release R4.1.3 . . . 271
G.6.2 Changed Specification Items in Release R4.1.3 . . . 272
G.6.3 Deleted Specification Items in Release R4.1.3 . . . 272

G.6.4 Added Constraints in Release R4.1.3 . . . 272
G.6.5 Changed Constraints in Release R4.1.3 . . . 272
G.6.6 Deleted Constraints in Release R4.1.3 . . . 272
G.7 Changes in AUTOSAR release R4.2.1 . . . 272
G.7.1 Added Specification Items in Release R4.2.1 . . . 272
G.7.2 Changed Specification Items in Release R4.2.1 . . . 272
G.7.3 Deleted Specification Items in Release R4.2.1 . . . 273
G.7.4 Added Constraints in Release R4.2.1 . . . 273
G.7.5 Changed Constraints in Release R4.2.1 . . . 273
G.7.6 Deleted Constraints in Release R4.2.1 . . . 273
G.8 Changes in AUTOSAR release R4.2.2 . . . 273
G.8.1 Added Specification Items in Release R4.2.2 . . . 273
G.8.2 Changed Specification Items in Release R4.2.2 . . . 274
G.8.3 Deleted Specification Items in Release R4.2.2 . . . 274
G.8.4 Added Constraints in Release R4.2.2 . . . 274
G.8.5 Changed Constraints in Release R4.2.2 . . . 274
G.8.6 Deleted Constraints in Release R4.2.2 . . . 274
G.9 Changes in AUTOSAR release R4.3.0 . . . 274
G.9.1 Added Specification Items in Release R4.3.0 . . . 274
G.9.2 Changed Specification Items in Release R4.3.0 . . . 274
G.9.3 Added Constraints in Release R4.3.0 . . . 274
G.9.4 Changed Constraints in Release R4.3.0 . . . 275
G.9.5 Deleted Constraints in Release R4.3.0 . . . 275
G.10 Changes in AUTOSAR release R4.3.1 . . . 275
G.10.1 Added Specification Items in Release R4.3.1 . . . 275
G.10.2 Changed Specification Items in Release R4.3.1 . . . 275
G.10.3 Added Constraints in Release R4.3.1 . . . 275
G.10.4 Changed Constraints in Release R4.3.1 . . . 275
G.10.5 Deleted Constraints in Release R4.3.1 . . . 275
G.11 Changes in AUTOSAR release R4.4.0 . . . 276
G.11.1 Added Specification Items in Release R4.4.0 . . . 276
G.11.2 Changed Specification Items in Release R4.4.0 . . . 276
G.11.3 Added Constraints in Release R4.4.0 . . . 276
G.11.4 Changed Constraints in Release R4.4.0 . . . 276
G.11.5 Deleted Constraints in Release R4.4.0 . . . 276
G.12 Changes in AUTOSAR release R19-11 . . . 277
G.12.1 Added Specification Items in Release 19-11 . . . 277
G.12.2 Changed Specification Items in Release 19-11 . . . 277
G.12.3 Added Constraints in Release 19-11 . . . 277
G.12.4 Changed Constraints in Release 19-11 . . . 277
G.12.5 Deleted Constraints in Release 19-11 . . . 277
G.13 Changes in AUTOSAR release R20-11 . . . 277
G.13.1 Added Specification Items in R20-11 . . . 277

G.13.2 Changed Specification Items in R20-11 . . . 277
G.13.3 Deleted Specification Items in R20-11 . . . 278
G.13.4 Added Constraints in R20-11 . . . 278
G.13.5 Changed Constraints in R20-11 . . . 278
G.13.6 Deleted Constraints in R20-11 . . . 278
G.14 Changes in AUTOSAR release R21-11 . . . 278
G.14.1 Added Specification Items in R21-11 . . . 278
G.14.2 Changed Specification Items in R21-11 . . . 280
G.14.3 Deleted Specification Items in R21-11 . . . 280
G.14.4 Added Constraints in R21-11 . . . 281
G.14.5 Changed Constraints in R21-11 . . . 283
G.14.6 Deleted Constraints in R21-11 . . . 283
G.15 Changes in AUTOSAR release R22-11 . . . 283
G.15.1 Added Specification Items in R22-11 . . . 283
G.15.2 Changed Specification Items in R22-11 . . . 284
G.15.3 Deleted Specification Items in R22-11 . . . 284
G.15.4 Added Constraints in R22-11 . . . 284
G.15.5 Changed Constraints in R22-11 . . . 287
G.15.6 Deleted Constraints in R22-11 . . . 287
G.16 Changes in AUTOSAR release R23-11 . . . 287
G.16.1 Added Specification Items in R23-11 . . . 287
G.16.2 Changed Specification Items in R23-11 . . . 288
G.16.3 Deleted Specification Items in R23-11 . . . 288
G.16.4 Added Constraints in R23-11 . . . 288
G.16.5 Changed Constraints in R23-11 . . . 289
G.16.6 Deleted Constraints in R23-11 . . . 290
G.17 Changes in AUTOSAR release R24-11 . . . 290
G.17.1 Added Specification Items in R24-11 . . . 290
G.17.2 Changed Specification Items in R24-11 . . . 290
G.17.3 Deleted Specification Items in R24-11 . . . 290
G.17.4 Added Constraints in R24-11 . . . 291
G.17.5 Changed Constraints in R24-11 . . . 292
G.17.6 Deleted Constraints in R24-11 . . . 296
G.18 Changes in AUTOSAR release R25-11 . . . 297
G.18.1 Added Specification Items in R25-11 . . . 297
G.18.2 Changed Specification Items in R25-11 . . . 297
G.18.3 Deleted Specification Items in R25-11 . . . 297
G.18.4 Added Constraints in R25-11 . . . 297
G.18.5 Changed Constraints in R25-11 . . . 297
G.18.6 Deleted Constraints in R25-11 . . . 298
G.19 Changes in AUTOSAR release R26-11 . . . 298
G.19.1 Added Specification Items in R26-11 . . . 298
G.19.2 Changed Specification Items in R26-11 . . . 298

G.19.3 Deleted Specification Items in R26-11 299
G.19.4 Added Constraints in R26-11 300
G.19.5 Changed Constraints in R26-11 301
G.19.6 Deleted Constraints in R26-11 305

References

[1] Meta Model
AUTOSAR_FO_MMOD_MetaModel

[2] Methodology for Classic Platform
AUTOSAR_CP_TR_Methodology

[3] System Template
AUTOSAR_CP_TPS_SystemTemplate

[4] Standardization Template
AUTOSAR_FO_TPS_StandardizationTemplate

[5] Virtual Functional Bus
AUTOSAR_CP_TR_VFB

[6] Software Component Template
AUTOSAR_CP_TPS_SoftwareComponentTemplate

[7] Glossary
AUTOSAR_FO_TR_Glossary

[8] Specification of RTE Software
AUTOSAR_CP_SWS_RTE

[9] Generic Structure Template
AUTOSAR_FO_TPS_GenericStructureTemplate

[10] Meta Model-generated XML Schema
AUTOSAR_FO_MMOD_XMLSchema

[11] Basic Software Module Description Template
AUTOSAR_CP_TPS_BSWModuleDescriptionTemplate

[12] System-level Logical Execution Time: Augmenting the Logical Execution Time Paradigm for Distributed Real-time Automotive Software

1 Introduction

1.1 Overview

This AUTOSAR document contains the specification of the AUTOSAR Timing Extensions (TIMEX) and describes the elements of the AUTOSAR meta-model [1] used for creating timing models for the respective AUTOSAR Platform.

It is a supplement to the formal Unified Modeling Language (UML) definition of the Timing Extensions by means of the AUTOSAR meta-model. In other words, this document in addition to the formal definition provides introductory description and rationale for the part of the AUTOSAR meta-model relevant for the creation of timing models.

1.2 Approach

For the integration of timing information into the AUTOSAR meta-model there were two viable alternatives: the extension of existing templates, or the definition of a separate timing template.

Several discussions lead to the decision to explicitly NOT defining a separate timing template. The most valuable advantage of such an approach is addressed by the idea behind the current template composition. They are highly adapted to the AUTOSAR methodology ([2]) and the several templates handle specific process steps in the methodology.

It is neither the goal to provide a proposal for a timing augmented development process, nor to define an isolated, new process step (e.g. a timing process step). Therefore, the augmentation of the existing templates instead of the creation of a new timing template reduces dependencies in the meta-model among templates.

1.3 Scope

The primary purpose of TIMEX is to support constructing embedded real-time systems that satisfy given timing requirements and to perform timing analysis/validations of those systems once they have built up.

TIMEX provides a timing model as specification basis for a contract based development process, in which the development may be carried out by different organizations in different locations and time frames.

The constraints entered in the early phase of the project (when corresponding solutions are not developed yet) shall be seen as extra-functional requirements agreed between the development partners. In such way, the timing specification supports a top-down design methodology.

However, due to the fact that a pure top-down design is not feasible in most of the cases (e.g. because of legacy code), the timing specification allows the bottom-up design methodology as well.

The resulting overall specification shall enable the analysis of a system's timing behavior and the validation of the analysis results against timing constraints. Thus, timing properties required for the analysis shall be contained in the timing augmented system model. Example: the priority of a task, the activation behavior of an interrupt, the sender timing of a PDU and frame etc.).

Such timing properties can be found all across AUTOSAR. For example [3] provides means to configure and specify the timing behavior of the communication stack. Furthermore the execution time of executable entities can be specified. In addition, the overall specification shall provide means to describe timing constraints. A timing constraint defines a restriction for the timing behavior of the system (e.g. bounding the maximum latency from sensor sampling to actuator access). Timing constraints are added to the system model using TIMEX. Constraints, together with the result of timing analysis, are considered during the validation of a system's timing behavior, when a nominal/actual value comparison is performed.

Note: TIMEX enables the analysis and validation of an AUTOSAR system's timing behavior. However, the specification of analysis and validation **results** (e.g. the maximum resource load of an ECU, etc.) is not addressed in this document.

1.4 Document Conventions

Technical terms are typeset in mono spaced font, e.g. `PortPrototype`. As a general rule, plural forms of technical terms are created by adding "s" to the singular form, e.g. `PortPrototype`s. By this means the document resembles terminology used in the AUTOSAR XML Schema.

This document contains constraints in textual form that are distinguished from the rest of the text by a unique numerical constraint ID, a headline, and the actual constraint text starting after the ⌈ character and terminated by the ⌋ character.

The purpose of these constraints is to literally constrain the interpretation of the AUTOSAR meta-model such that it is possible to detect violations of the standardized behavior implemented in an instance of the meta-model (i.e. on M1 level).

Makers of AUTOSAR tools are encouraged to add the numerical ID of a constraint that corresponds to an M1 modeling issue as part of the diagnostic message issued by the tool.

The attributes of the classes introduced in this document are listed in form of class tables. They have the form shown in the example of the top-level element AUTOSAR:

Please note that constraints are not supposed to be enforceable at any given time in an AUTOSAR workflow. During the development of a model, constraints may legitimately be violated because an incomplete model will obviously show inconsistencies.

However, at specific points in the workflow, constraints shall be enforced as a safeguard against misconfiguration.

The points in the workflow where constraints shall be enforced, sometimes also known as the “imposition time” of the constraint, are different for each model category, e.g. on the classic platform, the constraints defined for software-components are typically enforced prior to the generation of the RTE while the constraints against the definition of an Ecu extract shall be applied when the Ecu configuration for the Com stack is created.

For each document, possible imposition times of constraints are defined and the imposition times are typically mentioned in the constraint themselves to give a proper orientation for implementers of AUTOSAR authoring tools.

Let `AUTOSAR` be an example of a typical class table. The first rows in the table have the following meaning:

Class: The name of the class as defined in the UML model.

Package: The UML package the class is defined in. This is only listed to help locating the class in the overall meta model.

Note: The comment the modeler gave for the class (class note). Stereotypes and UML tags of the class are also denoted here.

Base Classes: If applicable, the list of direct base classes.

The headers in the table have the following meaning:

Attribute: The name of an attribute of the class. Note that AUTOSAR does not distinguish between class attributes and owned association ends.

Type: The type of an attribute of the class.

Mul.: The assigned multiplicity of the attribute, i.e. how many instances of the given data type are associated with the attribute.

Kind: Specifies, whether the attribute is aggregated in the class (`aggr` aggregation), an UML attribute in the class (`attr` primitive attribute), or just referenced by it (`ref` reference). Instance references are also indicated (`iref` instance reference) in this field.

Note: The comment the modeler gave for the class attribute (role note). Stereotypes and UML tags of the class are also denoted here.

Please note that the chapters that start with a letter instead of a numerical value represent the appendix of the document. The purpose of the appendix is to support the explanation of certain aspects of the document and does not represent binding conventions of the standard.

The verbal forms for the expression of obligation specified in [TPS_STDT_00053] shall be used to indicate requirements, see [4, Standardization Template].

Please note: By intent, TPS documents (and their traceable items) do not trace up to an RS (requirement item).

2 Modeling

The AUTOSAR Timing Extensions (TIMEX) provide some basic means to describe and specify timing information: TimingDescriptions, expressed by TimingDescriptionEvents and TimingDescriptionEventChains, and TimingConstraints that are imposed on these TimingDescriptionEvent and TimingDescriptionEventChains. Both means, TimingDescriptions and TimingConstraints, are organized in *timing views* for specific purposes.

In general, the purpose of TIMEX are two fold:

- to provide timing requirements that guide the construction of systems which eventually shall satisfy those timing requirements
- to provide sufficient timing information to analyze and validate the temporal behavior of a system

Compared to the specification of a system's functional behavior, the specification of its timing behavior requires additional information to be captured. Not only the eventual occurrence of events but also their exact timing or the concurrency of various events become important. Therefore, in the specification of timing extensions for AUTOSAR, the *event* is the basic entity. This event is used to refer to an observable behavior within a system at a certain point in time. Example: (e.g. the activation of a RunnableEntity, the transmission of a frame etc.)

Having to deal with different abstraction levels and views (see chapter 2.1), and in order to avoid semantic confusion with existing concepts, a new abstract type TimingDescriptionEvent (see section 2.3.2) is introduced as a formal basis for the timing extensions. Depending on the model entity and the associated observable behavior, specific timing events are defined and linked to the different views.

For the analysis of a system's timing behavior usually not only single events but also the correlation of different events is of fundamental importance. To relate timing events to each other, a further concept called TimingDescriptionEventChain (see section 2.3.1) is introduced. Hereby, it is important to note that for the referenced events of an event chain a functional dependency is implicitly assumed. This means that an event of a chain somehow causes subsequent chain events. An example for an end-to-end event chain with bus communication is depicted in Figure 2.5 in chapter 2.1. This event chain describes the path from software component instance "SWC1" to software component instance "SWC3".

Based on events and event chains, it is possible to express various specific timing constraints derived from the abstract type TimingConstraint. These timing constraints specify the expected timing behavior. As timing constraints shall be valid independently from implementation details, they are also expressed on a abstract level by referencing TimingDescriptionEvents and TimingDescriptionEventChains.

Thus, by means of events, event chains and timing constraints defined on top of these, a separate central timing specification can be provided, decoupling the expected tim-

ing behavior from the actually implemented behavior. This approach supports timing contracts for AUTOSAR systems in a top-down as well as bottom-up approach.

2.1 TimingExtensions (Timing Views)

A TIMEX model starts with the meta-class `TimingExtension` or rather, one of the sub-classes of `TimingExtension` as the top-level element. This is the owning element for all other related elements. The sub-classes of `TimingExtension` define a set of timing views as shown in Figure 2.1 and detailed in the next sub-sections. The chosen view depends on the availability of necessary information and the stage in the workflow. The timing views are:

- **VfbTiming**: timing information related to the interaction (e.g. reading and writing of data to ports) of `SwComponentType`s at VFB level (2.1.1)
- **SwcTiming**: timing information related to the `SwcInternalBehavior` of `AtomicSwComponentType`s (2.1.2)
- **SystemTiming**: timing information related to a `System`, utilizing information about topology, software deployment, and signal mapping (2.1.3)
- **BswModuleTiming**/**BswCompositionTiming**: respectively, timing information related to the `BswInternalBehavior` of a single `BswModuleDescription`; timing information related to `BswInternalBehavior` of more than one implementation of a `BswModuleDescription` (2.1.4)
- **EcuTiming**: timing information related to the `EcucValueCollection` covering the entire software on an ECU with application software and configured basic software (2.1.5)

The event types are used to specify:

- reading and writing of data from and to specific SWC ports
- calling of services and receiving their responses (VFB, SW-C, System and ECU Timing)
- sending and receiving data via networks and through communication stacks (System and ECU Timing)
- activating, starting and terminating executable entities (SW-C Timing and Basic SW Module Timing)
- calling basic software services and receiving their responses (ECU Timing and Basic SW Module Timing).

[TPS_TIMEX_00009] Optionality of Timing Extensions ⌈To maintain it's optional use in the AUTOSAR methodology, TIMEX always references "outwards" towards other external (i.e. in other template specifications) model elements.⌋

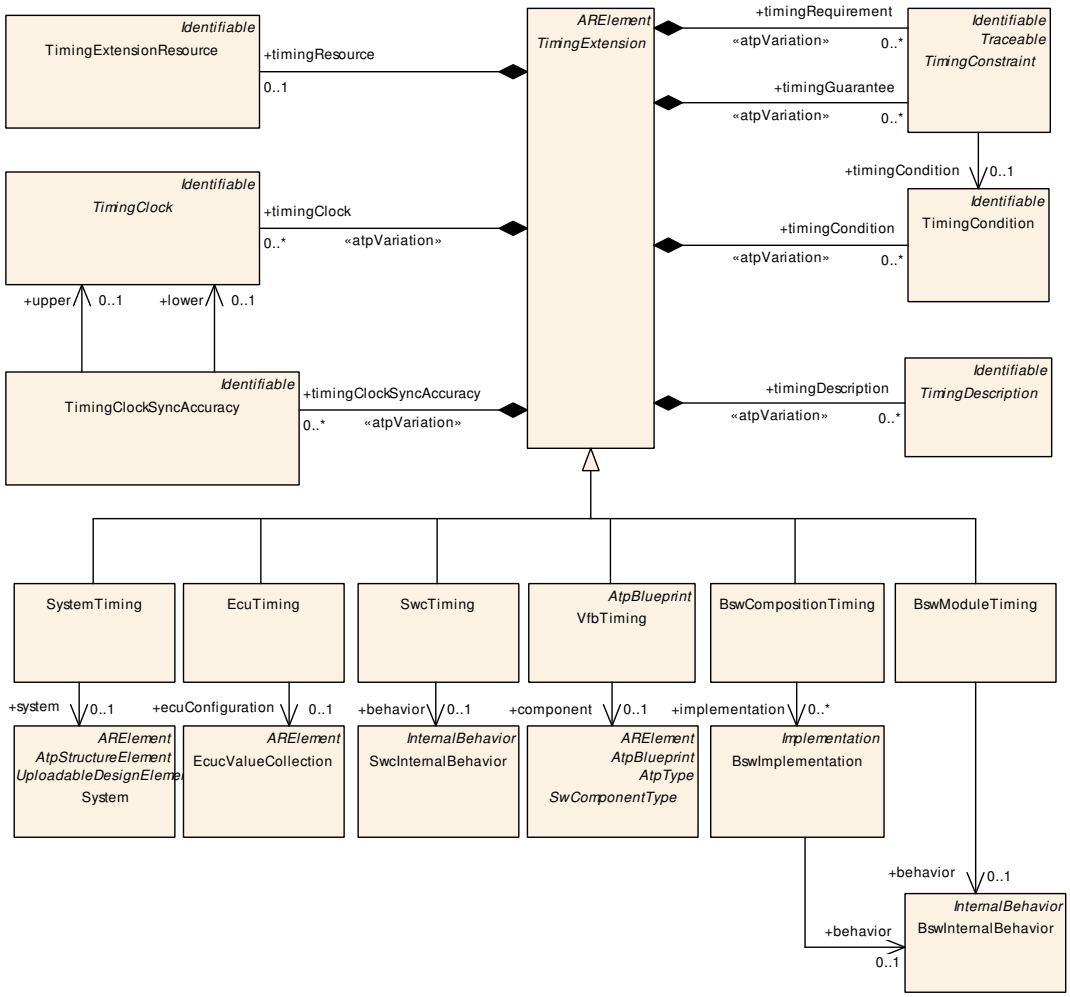

Figure 2.1: Timing Extensions top-level view

2.1.1 VfbTiming

AUTOSAR defines the *Virtual Functional Bus* [5] as a composition of SwComponentPrototypes at a logical level, regardless of their physical distribution. On this logical level a special view can be applied for timing specification. This section describes what kind of timing specification can be applied at VFB level for a system or sub-system. Typically, end-to-end timing constraints, including (physical) sensors and actuators, shall be captured in this view, allowing an early formalization of those constraints.

Neglecting the physical distribution means that the VfbTiming view does not deal with the question, in which system context the prototype of a CompositionSwComponentType shall be implemented. An additional restriction of the VfbTiming view is present due to the black box treatment of software components. The SwcInternalBehavior of AtomicSwComponentTypes is not considered. For these mentioned restrictions (irrelevance of the physical distribution, black box view), TimingDescriptions at VFB level should only refer to SwComponentTypes, PortPrototypes and their connections, but not the InternalBehavior.

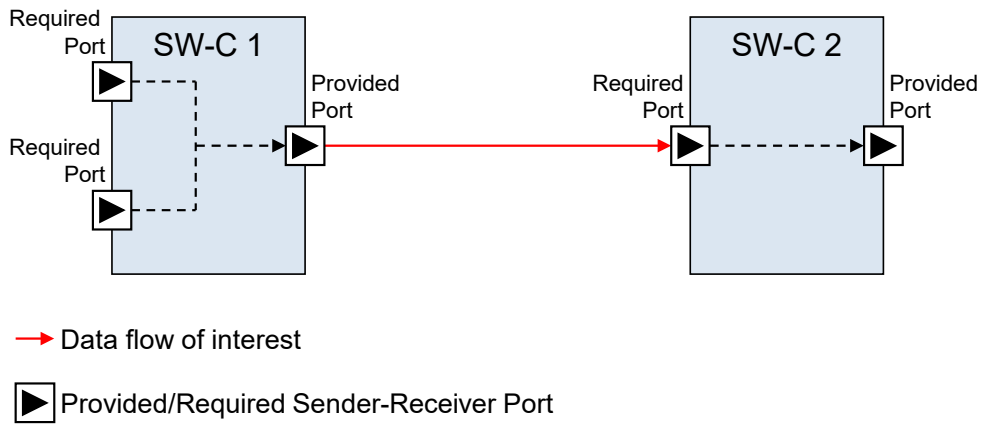

Figure 2.2: Example: Data flow in the scope of the VfbTiming view

The VfbTiming view is applicable for different system granularities. The smallest granularity is the investigation of a single SwComponentType without any contextual embedding. Here, a timing description can only refer to relations between a component's RPortPrototypes and the same component's PPortPrototypes.

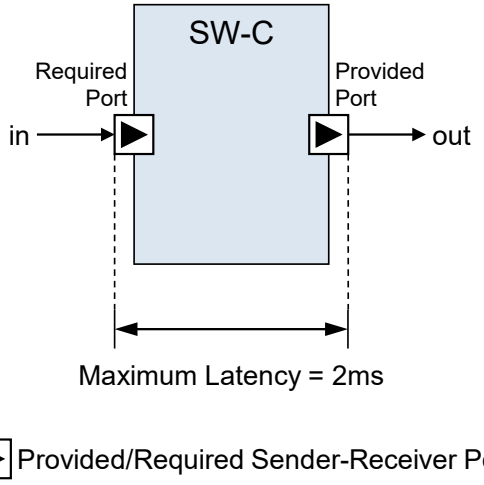

Figure 2.3: Example: Latency requirement

As an example, consider the timing constraint illustrated in Figure 2.3: "From the point in time, where the value *in* is received by the SWC, until the point in time, where the newly calculated value *out* is sent, there shall be a maximum latency of 2 ms". This would be attached to the timing description that refers to an AtomicSwComponentType *SW-C*.

In case of a CompositionSwComponentType that itself contains other SwComponentPrototypes, the timing interrelation between different components, e.g. from one component's PPortPrototype to another component's RPortPrototype, could be of interest.

[TPS_TIMEX_00032] Purpose of VfbTiming ⌈The element VfbTiming aggregates all timing information, timing descriptions and timing constraints related to the VFB View.⌋

Class	**VfbTiming**			
Note	A model element used to define timing descriptions and constraints at VFB level. TimingDescriptions aggregated by VfbTiming are restricted to event chains referring to events which are derived from the class TDEventVfb. **Tags:** atp.recommendedPackage=TimingExtensions			
Base	*ARElement*, *ARObject*, *AtpBlueprint*, *CollectableElement*, *Identifiable*, *MultilanguageReferrable*, *PackageableElement*, *Referrable*, *TimingExtension*			
Aggregated by	ARPackage.element			
Attribute	***Type***	***Mult.***	***Kind***	***Note***
component	SwComponentType	0..1	ref	This defines the scope of a VfbTiming. All corresponding timing descriptions and constraints shall be defined within this scope. **Tags:** atp.Splitkey=component

Table 2.1: VfbTiming

The `VfbTiming` shall also be restricted to permit only a view in the context of the Classic Platform.

[constr_6923] Restriction of `System.category` in a `VfbTiming` view

Imposition time: `IT_TimingViewReady`

⌈The `SwComponentType` referenced by `VfbTiming.component` shall be restricted to a `SwComponentType` which is referenced by a `SwComponentPrototype.type` and that `SwComponentPrototype` is aggregated by a `CompositionSwComponentType.component` and that `CompositionSwComponentType` is transitively referenced by a `RootSwCompositionPrototype.softwareComposition` and that `RootSwCompositionPrototype` is aggregated by a `System.rootSoftwareComposition` where the `System.category` shall be one of those in [constr_6922].⌋

2.1.2 SwcTiming

In contrast to the `VfbTiming` view, a specification engineer might especially be interested in the `SwcInternalBehavior` of `AtomicSwComponentType`s that are represented as black boxes at VFB level. The `SwcInternalBehavior` specifies a component's behavioral decomposition into runnable entities, which are executed at runtime. Thus, in `SwcTiming` view, a timing description is attached to the `SwcInternalBehavior` of a `SwComponentType`. It can refer to the activation, start, and termination (see section 2.3.2.2.1) of the execution of a `RunnableEntity`.

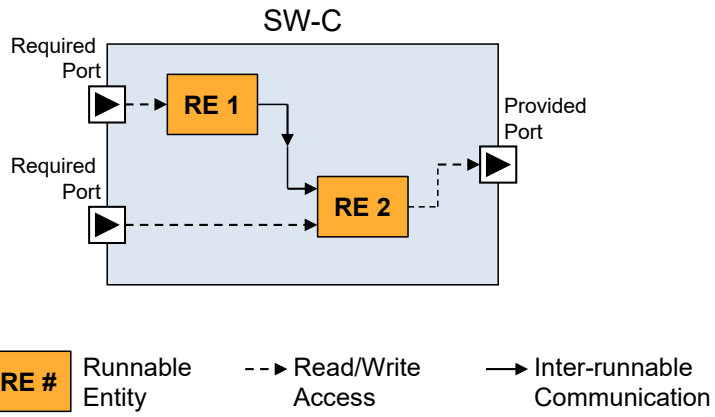

Figure 2.4: Example: Data flow in the scope of the SW-C Timing view

Class	**SwcTiming**			
Note	The SwcTiming is used to describe the timing of an atomic software component. TimingDescriptions aggregated by SwcTiming are restricted to event chains referring to events which are derived from the classes TDEventVfb and TDEventSwcInternalBehavior. **Tags:** atp.recommendedPackage=TimingExtensions This Class is only used by the AUTOSAR Classic Platform.			
Base	*ARElement*, *ARObject*, *CollectableElement*, *Identifiable*, *MultilanguageReferrable*, *Packageable Element*, *Referrable*, *TimingExtension*			
Aggregated by	ARPackage.element			
Attribute	***Type***	***Mult.***	***Kind***	***Note***
behavior	SwcInternalBehavior	0..1	ref	This defines the scope of a SwcTiming. All corresponding timing descriptions and constraints shall be defined within this scope. Note! The reason for the cardinality of 0..1 is to ensure backward compatibility. **Tags:** atp.Splitkey=behavior

Table 2.2: SwcTiming

2.1.3 SystemTiming

At system level a special prototype of a `CompositionSwComponentType`—the `RootSwCompositionPrototype`—is instantiated. This prototype, the chosen hardware topology and other artifacts are used as input to the task dealing with the deployment of software components onto ECUs in order to configure the system. The main configuration result is the mapping of software components to ECUs and in further steps the resulting communication matrix is created. This information is aggregated in the `System` description.

The `SystemTiming` view is used to provide timing information at system level. As an extension, it can be attached to a `System`. As the `System` description aggregates all the information about `SwComponentType`s and their corresponding `SwcInternalBehavior`, it is possible to use the same concepts that are available in the views `VfbTiming` and `SwcTiming` also in this timing view. The difference is the specific system context that defines the validity of timing information at system level. Without

knowledge of the mapping of software components to a target hardware respectively ECU, only a generic platform independent description can be provided.

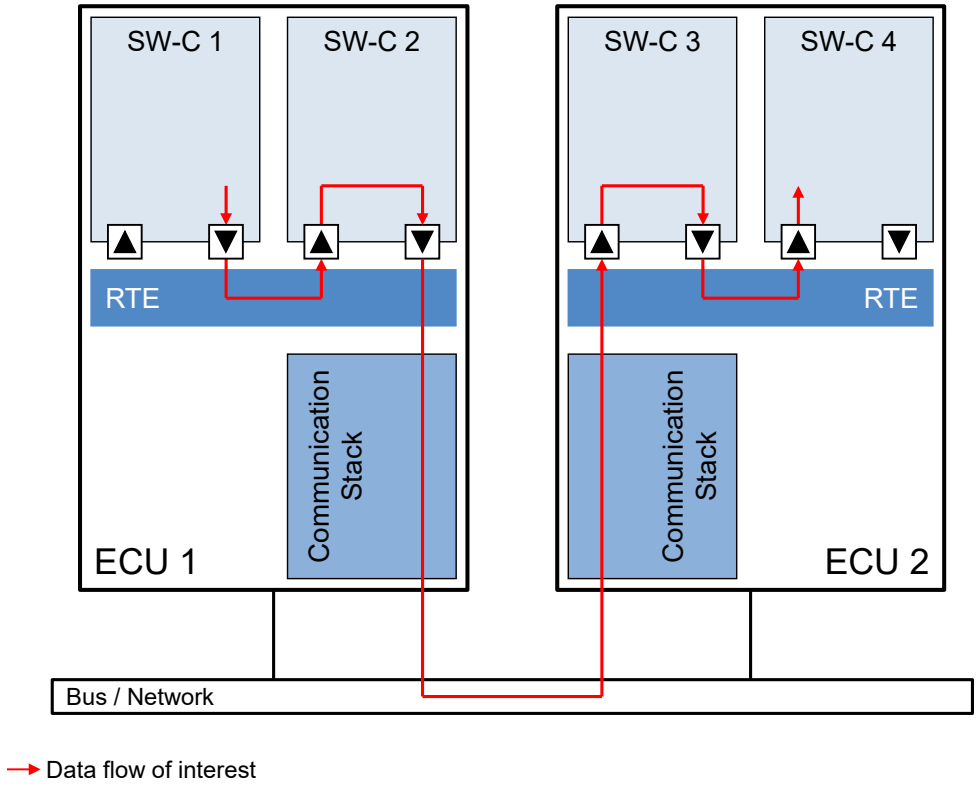

Figure 2.5: Example: Data flow in the scope of System Timing view

In addition, a timing description in system view refers to the concrete communication of software components that only was represented as abstract connectors in `VfbTiming` view. Due to the software mapping, now communication is either local communication over the RTE (both software components on same ECU) or remote communication over the RTE, through the communication stack of the BSW and a communication bus. A system-specific timing description thus can refer to signals (RTE), I-PDUs (COM) and frames (communication driver and bus).

Class	**SystemTiming**			
Note	A model element used to refine timing descriptions and constraints (from a VfbTiming) at System level, utilizing information about topology, software deployment, and signal mapping described in the System Template. TimingDescriptions aggregated by SystemTiming are restricted to events which are derived from the class TDEventVfb, TDEventSwcInternalBehavior and TDEventCom. **Tags:** atp.recommendedPackage=TimingExtensions			
Base	*ARElement*, *ARObject*, *CollectableElement*, *Identifiable*, *MultilanguageReferrable*, *Packageable Element*, *Referrable*, *TimingExtension*			
Aggregated by	ARPackage.element			
Attribute	***Type***	***Mult.***	***Kind***	***Note***

▽

△

Class	SystemTiming			
system	System	0..1	ref	This defines the scope of a SystemTiming. All corresponding timing descriptions and constraints shall be defined within this scope. **Tags:** atp.Splitkey=system

Table 2.3: SystemTiming

The SystemTiming view shall be restricted to a subset of categorys deemed relevant to the Classic Platform.

[constr_6922] Restriction of System.category in a SystemTiming view

Imposition time: IT_TimingViewReady

⌈The reference SystemTiming.system shall refer only to one of the following System.categorys from [TPS_SYST_01003]:

- SYSTEM_DESCRIPTION
- SYSTEM_EXTRACT
- ECU_SYSTEM_DESCRIPTION
- ECU_EXTRACT
- SW_CLUSTER_SYSTEM_DESCRIPTION

⌋

[constr_6849] Multiplicity of SystemTiming.system

Imposition time: IT_TimingViewReady

⌈For each SystemTiming, the reference to System in the role system shall exist⌋

2.1.4 BswModuleTiming and BswCompositionTiming

The Basic Software Timing consists of two perspectives, which are described in the next sections.

2.1.4.1 BswModuleTiming

As part of the methodology, a BswModuleDescription is generated for each BSW module as part of the ECU configuration phase. For every module its internals, the BswInternalBehavior, shall be defined, i.e. structuring any BswModuleEntity. Similar to the timing view on the SwcInternalBehavior of an AtomicSwComponentType as described in section 2.1.2, the BSW module timing view focuses on the activation, start and end of the execution of any BswModuleEntity. The timing description for each module can be attached to the BswModuleDescription.

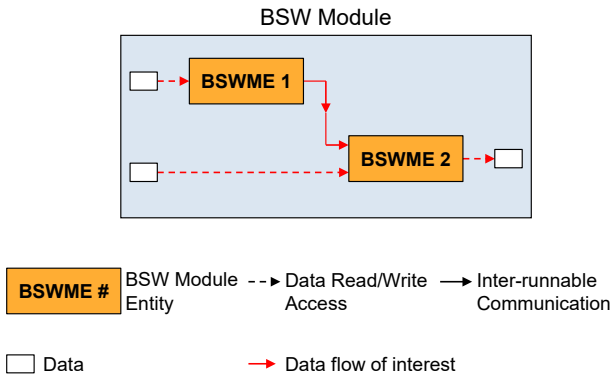

Figure 2.6: Example: Data flow in scope of BSW Module Timing view

Class	**BswModuleTiming**			
Note	A model element used to define timing descriptions and constraints for the BswInternalBehavior of one BSW Module. Thereby, for each BswInternalBehavior a separate timing can be specified. A constraint defined at this level holds true for all Implementations of that BswInternalBehavior. TimingDescriptions aggregated by BswModuleTiming are restricted to event chains referring to events which are derived from the class TDEventBswInternalBehavior. **Tags:** atp.recommendedPackage=TimingExtensions This Class is only used by the AUTOSAR Classic Platform.			
Base	*ARElement*, *ARObject*, *CollectableElement*, *Identifiable*, *MultilanguageReferrable*, *Packageable Element*, *Referrable*, *TimingExtension*			
Aggregated by	ARPackage.element			
Attribute	***Type***	***Mult.***	***Kind***	***Note***
behavior	BswInternalBehavior	0..1	ref	This defines the scope of a BswModuleTiming. All corresponding timing descriptions and constraints shall be defined within this scope. **Tags:** atp.Splitkey=behavior

Table 2.4: BswModuleTiming

[constr_6850] Multiplicity of `BswModuleTiming.behavior`

Imposition time: `IT_TimingViewReady`

⌈For each `BswModuleTiming`, the reference to `BswInternalBehavior` in the role `behavior` shall exist⌋

2.1.4.2 BswCompositionTiming

In contrast to the element `BswModuleTiming`, which describes the timing information of a single `BswInternalBehavior`, the `BswCompositionTiming` describes the timing information for more than one implementation of a basic software module — a *composition* of basic software modules. Typically, this is the case when the timing information of a basic software stack, consisting of several basic software modules, shall be described or the timing information of a basic software module that is deployed onto different cores shall be described.

Class	**BswCompositionTiming**			
Note	A model element used to define timing descriptions and constraints for a set of BswImplementations representing a BSW composition. A constraint defined at this level holds true for all referenced Bsw Implementations. Note, that multiple implementations of the same basic software module could be involved. TimingDescriptions aggregated by BswCompositionTiming are restricted to event chains referring to events which are derived from the class TDEventBswInternalBehavior and TDEventBsw. **Tags:** atp.recommendedPackage=TimingExtensions This Class is only used by the AUTOSAR Classic Platform.			
Base	*ARElement*, *ARObject*, *CollectableElement*, *Identifiable*, *MultilanguageReferrable*, *Packageable Element*, *Referrable*, *TimingExtension*			
Aggregated by	ARPackage.element			
Attribute	***Type***	***Mult.***	***Kind***	***Note***
implementation	BswImplementation	*	ref	This defines the scope of a BswCompositionTiming. All corresponding timing descriptions and constraints shall be defined within this scope. **Tags:** atp.Splitkey=implementation

Table 2.5: BswCompositionTiming

[constr_6851] Multiplicity of `BswCompositionTiming.implementation`

Imposition time: `IT_TimingViewReady`

⌈For each `BswCompositionTiming`, the reference to `BswImplementation` in the role `implementation` shall exist at least once⌋

2.1.5 EcuTiming

A result of the ECU configuration phase is the complete `EcucValueCollection` representing the ECU's configuration description. During ECU configuration, this artifact is filled amongst others with:

- the ECU Extract of System Configuration, where the needed part of the overall system description for the respective ECU is extracted.
- references to information about all BSW modules present on the ECU. Such BSW modules are described by `BswModuleDescription`s, providing for instance information about the interfaces that the modules offer or require.

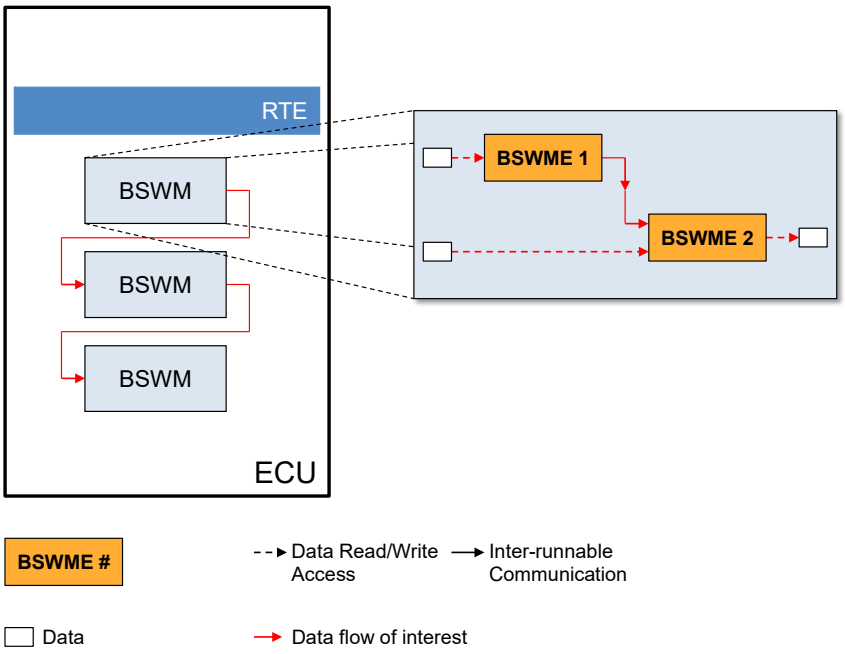

Figure 2.7: An example of data flow, whose timing behavior is in scope of ECU view

In this view, timing can reference all the ECU-relevant information: The deployed software component instances, the ECU related interactions including bus communication, Basic Software, etc. In other words, the `EcuTiming` has the same expressivity as the System Timing view but only focusing on one specific ECU in the system's topology. In addition, the entire BSW can be considered during timing modeling, because the complete composition and internal structure of the BSW modules are known. The internals of BSW modules and the inter-relations between BS modules are of interest in this timing view. The information is attached to the `EcucValueCollection`.

Class	**EcuTiming**			
Note	A timing view used to define timing descriptions and constraints within the scope of one ECU. TimingDescriptions aggregated by EcuTiming are allowed to use all events derived from the class TimingDescriptionEvent. **Tags:** atp.recommendedPackage=TimingExtensions This Class is only used by the AUTOSAR Classic Platform.			
Base	*ARElement*, *ARObject*, *CollectableElement*, *Identifiable*, *MultilanguageReferrable*, *Packageable Element*, *Referrable*, *TimingExtension*			
Aggregated by	ARPackage.element			
Attribute	***Type***	***Mult.***	***Kind***	***Note***
ecu Configuration	EcucValueCollection	0..1	ref	This defines the scope of an EcuTiming. All corresponding timing descriptions and constraints shall be defined within this scope. **Tags:** atp.Splitkey=ecuConfiguration

Table 2.6: EcuTiming

[constr_6852] Multiplicity of `EcuTiming.ecuConfiguration`

Imposition time: `IT_TimingViewReady`

⌈For each `EcuTiming`, the reference to `EcucValueCollection` in the role `ecuConfiguration` shall exist at least once⌋

2.2 Timing Conditions

In almost all cases, systems, and the application software executed in those systems, operate under various conditions, like normal condition, error condition, start-up condition, etc. During the operation of such systems the conditions may change at any time.

As a consequence timing constraints imposed on the system may vary depending on these conditions, too. TIMEX provides a means to support the description of timing constraints depending on such conditions by *Conditional Timing* as described in this section.

Almost all software management systems controlling an internal combustion engine shall maintain a constant temperature of the coolant to ensure the optimal operation under specific conditions. For example, critical thermal conditions may occur that may lead to severe damage of the engine's mechanical components. In order to prevent the engine's mechanical components from being damaged the software application shall respond faster than in the nominal case. Therefore, different timing constraints are imposed on a given event chain depending on a known condition.

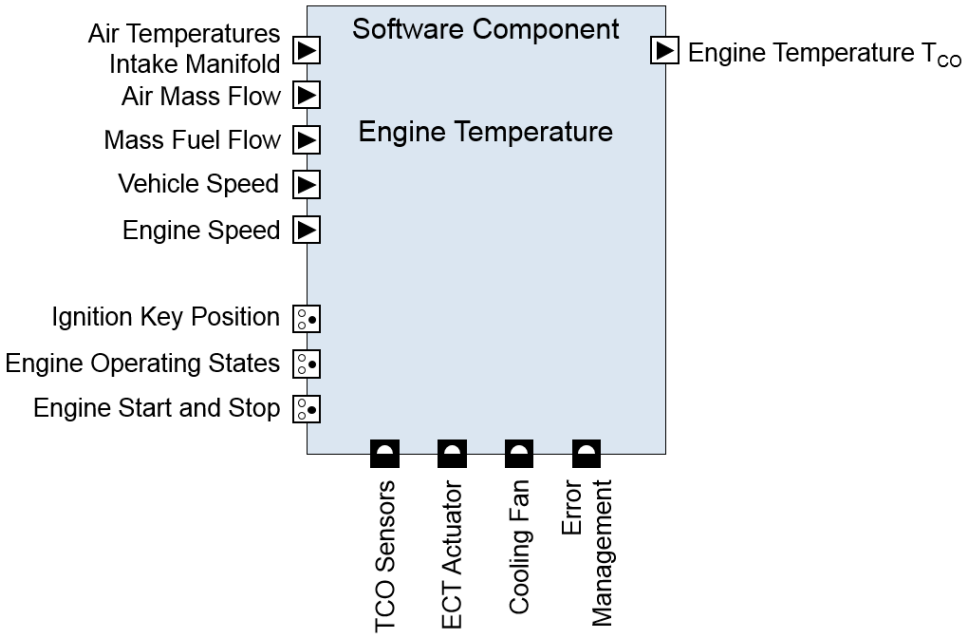

Figure 2.8: Rough sketch of an AUTOSAR software component (SW-C) controlling the coolant temperature (TCO) of an internal combustion engine. This SW-C shall consider various modes of operation as shown in the lower left corner of the components, namely the mode ports called ”Ignition Key Position”, ”Engine Operating States”, and ”Engine Start and Stop”.

As shown in Figure 2.8 the SWC controlling the coolant temperature requires information on the current operating conditions of the internal combustion engine. Depending on these conditions different timing constraints are imposed on an event chain requiring different reaction time constraints.

In one situation, the reaction time shall be much faster than in other situation. For example, the mode port called `Engine Operating States` indicates a specific condition respectively *mode* the internal combustion engine operates in. In this specific mode it may happen that the internal combustion engine faces a critical thermal condition.

In order to prevent the engine from being damaged the Electronically Controlled Thermostat (ETC) shall be actuated much faster (client port called `ECT Actuator`) than in other cases. This is accomplished by specifying a tighter reaction time for this condition; and under any other condition the reaction time may be more relaxed.

Besides this particular example, there are a lot more cases where the timing constraints imposed on given event chains change depending on the internal combustion engines mode.

In dependable systems an application is typically designed in a fault tolerant manner. It either operates under normal condition — normal mode — or under failure condition — failure mode. As sketched in the upper part of Figure 2.9 in such an application a number of runnable entities process the values of three sensors. In a first step the sensor values are corrected by a runnable entity and are passed to another runnable

entity of the application that utilizes a control algorithm to calculate an output. This output value is used to control an actuator or is processed by other runnable entities in the system. In the same application another runnable entity checks the plausibility of the values received from the sensors.

The purpose of this runnable entity is to determine any unexpected and implausible deviation from the expected values of each sensor. If such an deviation is detected by the runnable entity checking the plausibility of the sensor values then a runnable entity correcting the sensor values is notified about this condition, namely indicating a failure of one of the sensors. The runnable entity correcting the sensor values is capable of deriving the value of the erroneous sensor based on the values of the other sensors which monitor other physical properties.

Thus, the application is operating under different conditions — normal and failure mode — and with regard to the software implementation this results in different worst case execution times of the runnable entity correcting the sensor values.

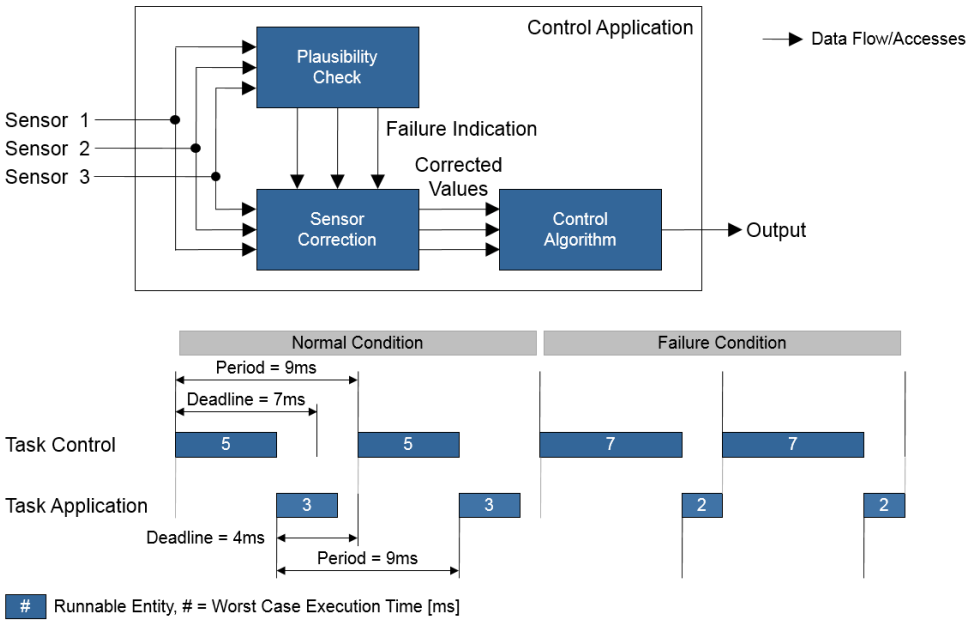

Figure 2.9: Generic fault tolerant control application

Assumed the application executing the three runnable entities is mapped to an ECU executing already runnable entities of another application. The runnable entities of these two applications are executed in the context of two tasks called `Task Control` and `Task Application`. The former task executes the runnable entities of the given fault tolerant application and the latter task executes the application already being mapped to the ECU and consisting of a number of runnable entities. Both tasks respectively applications are activated periodically every `9ms`. The task `Task Control` has a deadline of `7ms` and the task `Task Application` has a deadline of `4ms`.

As mentioned previously, the first application operates under two different conditions: Under normal condition the execution time of the runnable entities does not exceed `5ms`, and under failure condition the execution time of the runnable entities increases

to 7ms due to the additional time required for executing the algorithm to derive the value of the erroneous sensor.

A rough sketch of the task schedule containing both tasks is given in the lower part of Figure 2.9. On the left hand side the fault tolerant application is operating under normal conditions and on the right hand side this application is operating under failure condition. In this case — failure condition — the execution time 3ms of the task ask Application leads to a violation of the schedule, which means that the two applications cannot be integrated onto the same ECU unless both applications are mapped onto a more powerful ECU — resulting in a decrease of execution times. Another possibility would be that the application executed by the task Task Application provides capabilities to operate under degraded conditions resulting in a shorter execution time, for example 2ms.

However, in the cases described previously, timing constraints imposed on timing properties of SWCs and/or runnable entities depend on specific conditions a system shall operate properly.

TIMEX is capable of specifying timing constraints for specific conditions as shown in Figure 2.10. Such a timing constraint is valid if and only if the given timing condition holds.

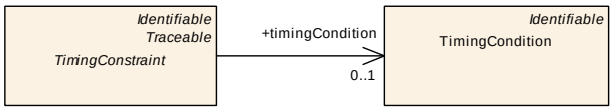

Figure 2.10: Conditional Timing Constraint

Since a TimingConstraint plays either the role of a timing requirement or timing guarantee the dependency on a condition can be specified on both types of timing information, namely timing constraint and timing property.

[TPS_TIMEX_00049] Purpose of TimingCondition ⌈The purpose of the TimingCondition is to describe a condition a timing constraint is depending on.⌋

[TPS_TIMEX_00050] Purpose of TimingConditionFormula ⌈The purpose of the TimingConditionFormula is to specify an expression describing a dependency on a specific condition.⌋

[TPS_TIMEX_00051] Purpose of TimingExtensionResource ⌈The purpose of the TimingExtensionResource is to subsume a number of re-usable elements, like instance references to various timing relevant elements, that are referenced from within a TimingConditionFormula. These elements of a TimingExtensionResource are related to the context of the aggregating — *parent* — TimingExtension.⌋

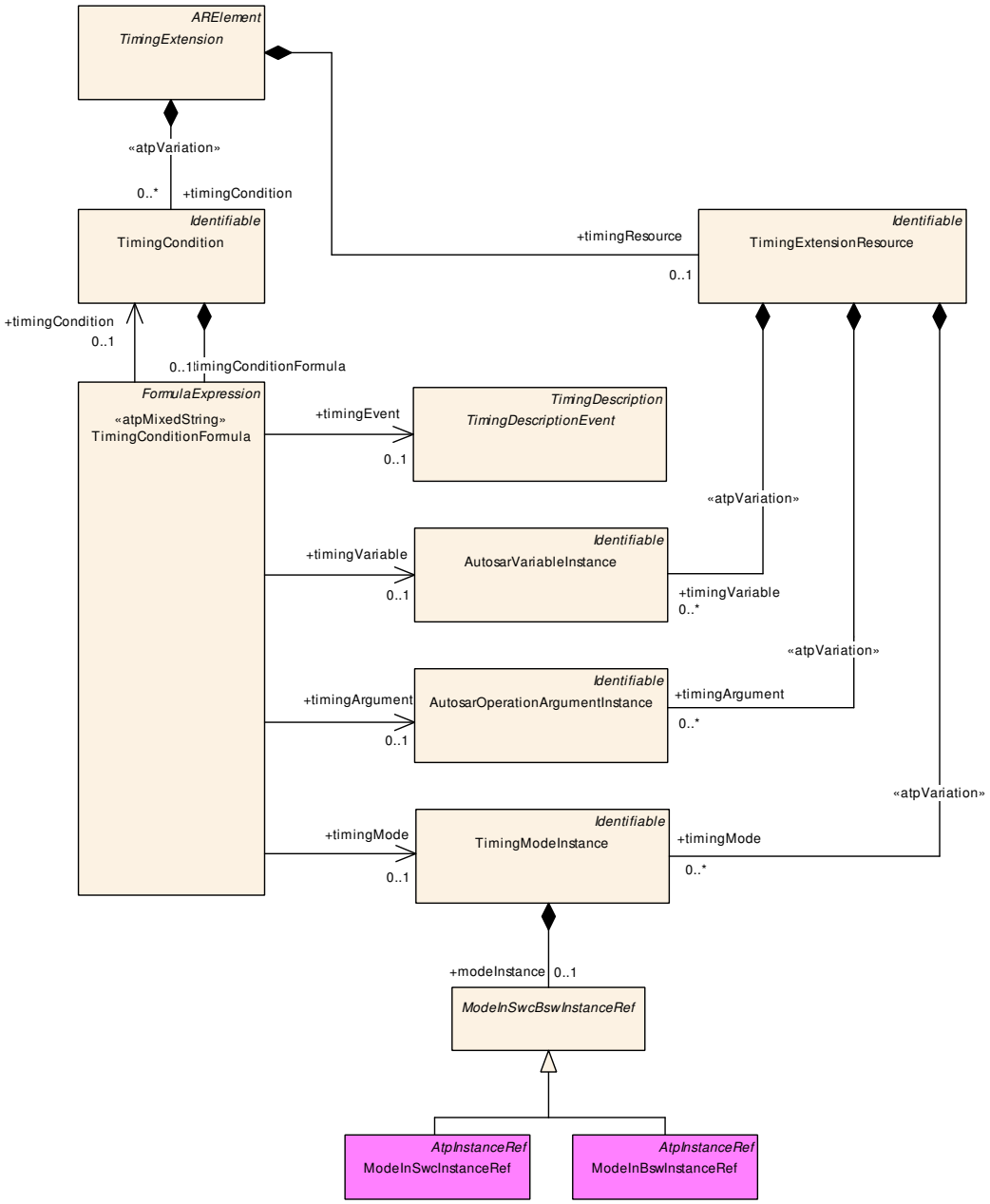

Figure 2.11: Conditional Timing

Class	**TimingCondition**			
Note	A TimingCondition describes a dependency on a specific condition. The element owns an expression which describes the timing condition dependency.			
Base	*ARObject*, *Identifiable*, *MultilanguageReferrable*, *Referrable*			
Aggregated by	*TimingExtension*.timingCondition			
Attribute	***Type***	***Mult.***	***Kind***	***Note***
timingCondition Formula	TimingCondition Formula	0..1	aggr	This is the expression describing the dependency on a specific condition. **Tags:** atp.Splitkey=timingConditionFormula

Table 2.7: TimingCondition

Class	«atpMixedString» **TimingConditionFormula**			
Note	A TimingConditionFormula describes a specific dependency. The expression shall be a boolean expression addressing modes, variables, arguments, and/or events.			
Base	*ARObject*, *FormulaExpression*			
Aggregated by	TimingCondition.timingConditionFormula			
Attribute	***Type***	***Mult.***	***Kind***	***Note***
timingArgument	AutosarOperation ArgumentInstance	0..1	ref	This refers to an argument of an operation call.
timingCondition	TimingCondition	0..1	ref	This refers to a timing condition that is part of an expression describing the dependency on a specific condition.
timingEvent	TimingDescriptionEvent	0..1	ref	This refers to a timing event.
timingMode	TimingModeInstance	0..1	ref	This refers to a mode declaration.
timingVariable	AutosarVariable Instance	0..1	ref	This refers to a variable.

Table 2.8: TimingConditionFormula

Class	**TimingExtensionResource**			
Note	A TimingExtensionResource provides the capability to contain instance references referred from within a timing condition formula.			
Base	*ARObject*, *Identifiable*, *MultilanguageReferrable*, *Referrable*			
Aggregated by	*TimingExtension*.timingResource			
Attribute	***Type***	***Mult.***	***Kind***	***Note***
timingArgument	AutosarOperation ArgumentInstance	*	aggr	This refers to an instance reference of an argument of an operation call. **Stereotypes:** atpVariation **Tags:** atp.Splitkey=timingArgument, timingArgument.shortName, timingArgument.variationPoint.shortLabel vh.latestBindingTime=postBuild
timingMode	TimingModeInstance	*	aggr	This refers to an instance reference of a mode declaration. **Stereotypes:** atpVariation **Tags:** atp.Splitkey=timingMode, timingMode.shortName, timingMode.variationPoint.shortLabel vh.latestBindingTime=postBuild
timingVariable	AutosarVariable Instance	*	aggr	This refers to an instance reference of a variable. **Stereotypes:** atpVariation **Tags:** atp.Splitkey=timingVariable, timingVariable.shortName, timingVariable.variationPoint.shortLabel vh.latestBindingTime=postBuild

Table 2.9: TimingExtensionResource

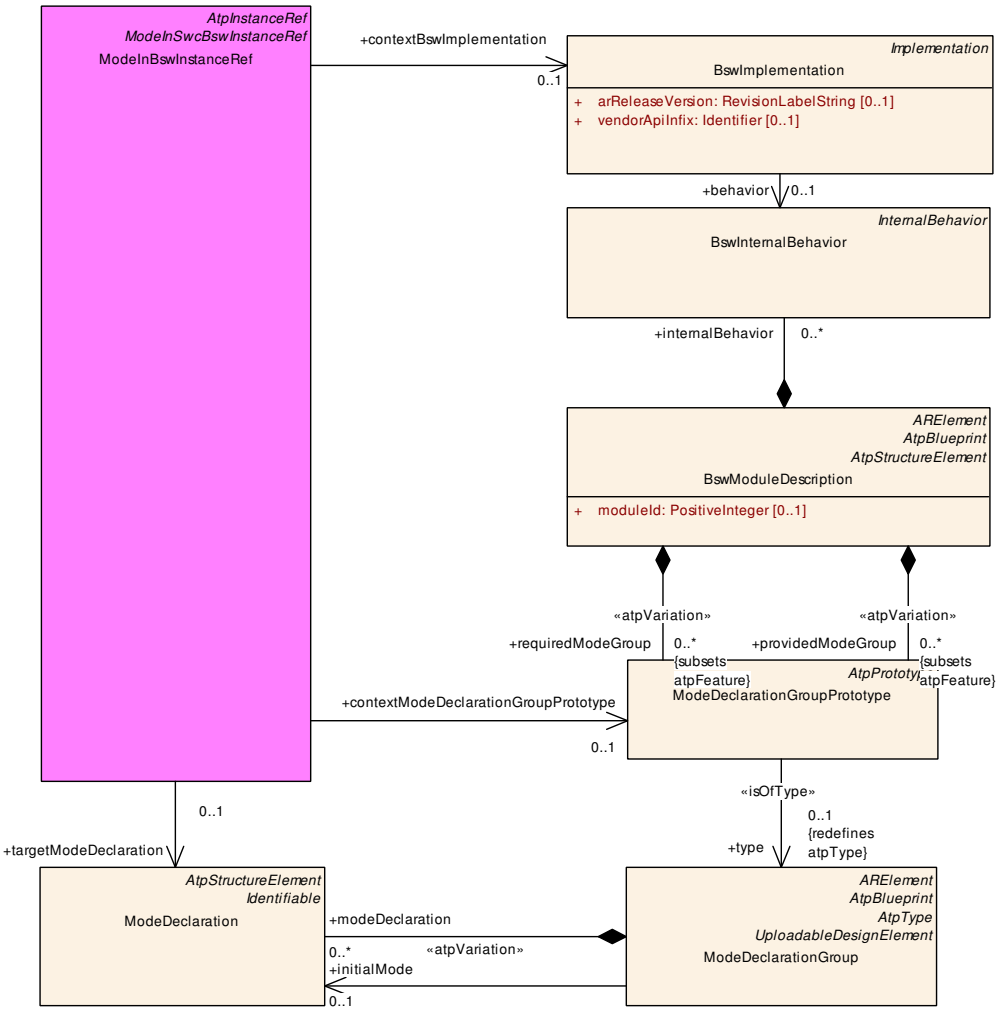

Figure 2.12: Instance Reference Mode for Basic Software Module

Since the notion of ”Type and Prototype” is not supported by the Basic Software Module Description Template, the element `ModeInBswInstanceRef` is not a specialization of `AtpInstanceRef`. Therefore, the directed association playing the role of ”base” is not present.

Class	***ModeInSwcBswInstanceRef*** (abstract)			
Note	Abstract class representing an instance reference to be capable of referencing a specific Mode Declaration utilized by a SW-C or BSW module.			
Base	*ARObject*			
Subclasses	ModeInBswInstanceRef, ModeInSwcInstanceRef			
Aggregated by	TimingModeInstance.modeInstance			
Attribute	***Type***	***Mult.***	***Kind***	***Note***
–	–	–	–	–

Table 2.10: ModeInSwcBswInstanceRef

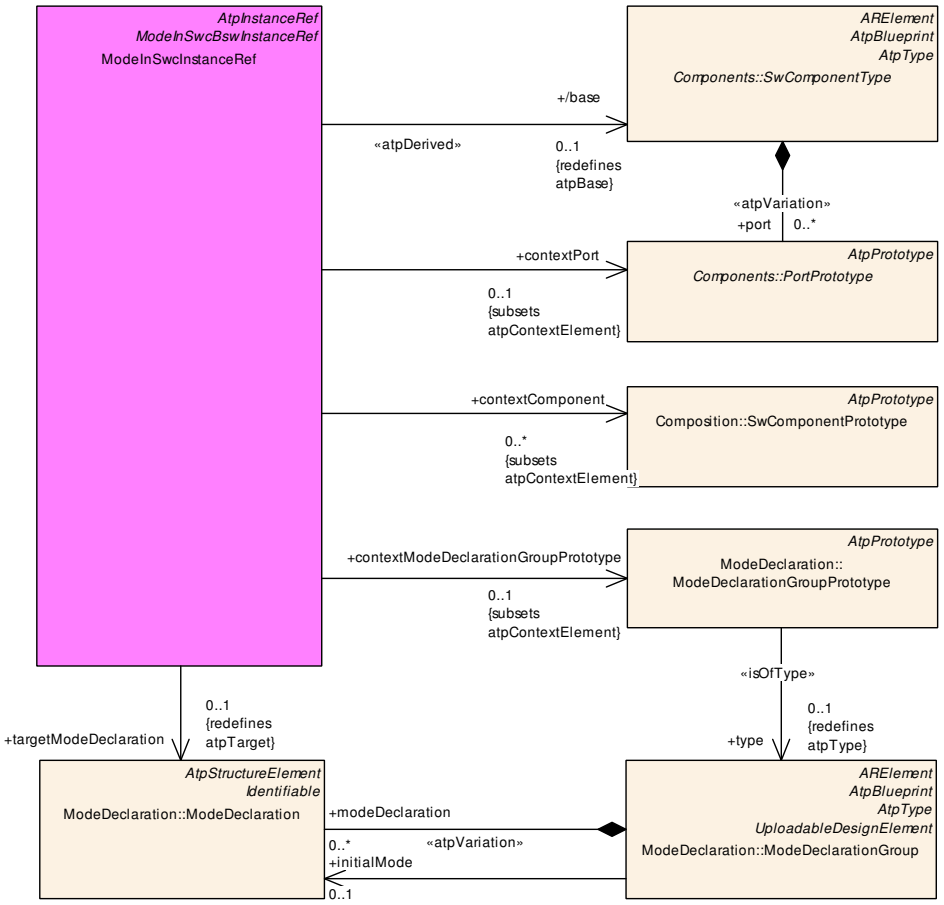

Figure 2.13: Instance Reference Mode for Software Component

Class	**TimingModeInstance**			
Note	This class specifies the mode declaration to be checked in a specific instance of a mode declaration group. This is used in a timing condition formula as an operand of the unary timing function TIMEX_mode Active to check whether the mode declaration is active at the point in time this expression is evaluated.			
Base	*ARObject*, *Identifiable*, *MultilanguageReferrable*, *Referrable*			
Aggregated by	TDEventOccurrenceExpression.mode, TimingExtensionResource.timingMode			
Attribute	***Type***	***Mult.***	***Kind***	***Note***
modeInstance	ModeInSwcBsw InstanceRef	0..1	aggr	This refers to a specific mode declaration in the given context. **Tags:** atp.Splitkey=modeInstance, modeInstance.context BswImplementation, modeInstance.contextComponent, modeInstance.contextModeDeclarationGroupPrototype, modeInstance.contextPort, modeInstance.targetMode Declaration

Table 2.11: TimingModeInstance

Class	**ModeInBswInstanceRef**
Note	Instance reference to be capable of referencing a specific ModeDeclaration of a ModeDeclarationGroup Prototype utilized in a BSW module.
Base	*ARObject*, *AtpInstanceRef*, *ModeInSwcBswInstanceRef*
Aggregated by	TimingModeInstance.modeInstance

▽

△

Class	**ModeInBswInstanceRef**			
Attribute	***Type***	***Mult.***	***Kind***	***Note***
contextBsw Implementation	BswImplementation	0..1	ref	Specifies the BSW implementation that manifests the context. **Tags:** xml.sequenceOffset=10 This Attribute is only used by the AUTOSAR Classic Platform.
contextMode Declaration GroupPrototype	ModeDeclarationGroup Prototype	0..1	ref	Specifies the mode declaration group prototype that manifests the context. **Tags:** xml.sequenceOffset=20
targetMode Declaration	ModeDeclaration	0..1	ref	Specifies the specific mode declaration in the given context. **Tags:** xml.sequenceOffset=30

Table 2.12: ModeInBswInstanceRef

[constr_6853] Multiplicity of ModeInBswInstanceRef.contextModeDeclarationGroupPrototype

Imposition time: IT_TimingViewReady

⌈For each ModeInBswInstanceRef, the reference to ModeDeclarationGroupPrototype in the role contextModeDeclarationGroupPrototype shall exist at least once.⌋

[constr_6854] Multiplicity of ModeInBswInstanceRef.targetModeDeclaration

Imposition time: IT_TimingViewReady

⌈For each ModeInBswInstanceRef, the reference to ModeDeclaration in the role targetModeDeclaration shall exist at least once.⌋

Class	**ModeInSwcInstanceRef**			
Note	Instance reference to be capable of referencing a ModeDeclaration at a specific Mode Switch Port of a SW-C.			
Base	*ARObject*, *AtpInstanceRef*, *ModeInSwcBswInstanceRef*			
Aggregated by	TimingModeInstance.modeInstance			
Attribute	***Type***	***Mult.***	***Kind***	***Note***
base	SwComponentType	0..1	ref	Specifies the SW component representing the base of the context. **Stereotypes:** atpDerived **Tags:** xml.sequenceOffset=10
context Component	SwComponent Prototype	*	ref	Specifies the SW component prototype representing the context. **Tags:** xml.sequenceOffset=20
contextMode Declaration GroupPrototype	ModeDeclarationGroup Prototype	0..1	ref	Specifies the mode declaration group prototype that manifests the context. **Tags:** xml.sequenceOffset=40

▽

△

Class	**ModeInSwcInstanceRef**			
contextPort	PortPrototype	0..1	ref	Specifies the port prototype representing the context. **Tags:** xml.sequenceOffset=30
targetMode Declaration	ModeDeclaration	0..1	ref	Specifies the specific mode declaration in the given context. **Tags:** xml.sequenceOffset=50

Table 2.13: ModeInSwcInstanceRef

[constr_6855] Multiplicity of `ModeInSwcInstanceRef.contextModeDeclarationGroupPrototype`

Imposition time: `IT_TimingViewReady`

⌈For each `ModeInSwcInstanceRef`, the reference to `ModeDeclarationGroupPrototype` in the role `contextModeDeclarationGroupPrototype` shall exist at least once.⌋

[constr_6856] Multiplicity of `ModeInSwcInstanceRef.contextPort`

Imposition time: `IT_TimingViewReady`

⌈For each `ModeInSwcInstanceRef`, the reference to `PortPrototype` in the role `contextPort` shall exist at least once.⌋

[constr_6857] Multiplicity of `ModeInSwcInstanceRef.targetModeDeclaration`

Imposition time: `IT_TimingViewReady`

⌈For each `ModeInSwcInstanceRef`, the reference to `ModeDeclaration` in the role `targetModeDeclaration` shall exist at least once.⌋

[constr_6899] Multiplicity of `ModeInSwcInstanceRef.base`

Imposition time: `IT_TimingViewReady`

⌈For each `ModeInSwcInstanceRef`, the reference to `SwComponentType` in the role `base` shall exist at least once.⌋

2.3 TimingDescription

The `TimingDescription` of a system, sub-system or SWC consists of observable `TimingDescriptionEvent`s and their causal relationships (`TimingDescriptionEventChain`) as shown in Figure 2.14. These are detailed in the next sections.

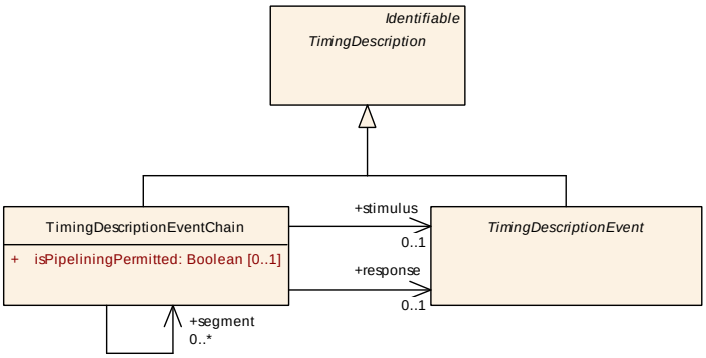

Figure 2.14: TimingDescription

2.3.1 TimingDescriptionEventChain

Event chains (TimingDescriptionEventChains) specify a causal relationship between functionally dependent events (TimingDescriptionEvents) and their temporal occurrences. Generally, the notion of a TimingDescriptionEventChain enables one to specify the relationship between two TimingDescriptionEvent points, for example: when a event A occurs then the event B occurs, or in other words, the event B occurs if and only if the event A occurred before.

In the context of a TimingDescriptionEventChain the event A has the role of the stimulus and the event B has the role of the response. By means of an TimingDescriptionEventChain, the correlation between a stimulation of a system and its corresponding response can be explicitly described and used as a formalized definition of the scope for TimingConstraints.

Event chains can be hierarchical/nested, i.e. composed of further TimingDescriptionEventChains and decomposed into further TimingDescriptionEventChains — in both cases the nested TimingDescriptionEventChains are named segments.

[TPS_TIMEX_00002] Purpose of TimingDescriptionEventChain ⌈The element TimingDescriptionEventChain is used to specify a causal relationship between timing description events and their occurrences during the runtime of a system.⌋

Class	**TimingDescriptionEventChain**			
Note	An event chain describes the causal order for a set of functionally dependent timing events. Each event chain has a well defined stimulus and response, which describe its start and end point. Furthermore, it can be hierarchically decomposed into an arbitrary number of sub-chains, so called *event chain segments*.			
Base	*ARObject*, *Identifiable*, *MultilanguageReferrable*, *Referrable*, *TimingDescription*			
Aggregated by	*TimingExtension*.timingDescription			
Attribute	***Type***	***Mult.***	***Kind***	***Note***

△

Class	TimingDescriptionEventChain			
isPipelining Permitted	Boolean	0..1	attr	States whether the scheduled entities in an LET interval shall use pipelined execution or not i.e. "permitted pipelining property" If TRUE, then the scheduled entities must implement pipelining. If FALSE or undefined, no pipelining applies.
response	TimingDescriptionEvent	0..1	ref	The response event representing the end point time (final TimingDescriptionEvent) of a timing event chain. **Tags:** atp.Splitkey=response xml.sequenceOffset=20
segment	TimingDescriptionEvent Chain	*	ref	A composed event chain consists of an arbitrary number of sub-chains. **Tags:** atp.Splitkey=segment xml.sequenceOffset=30
stimulus	TimingDescriptionEvent	0..1	ref	The stimulus event representing the starting point (initial TimingDescriptionEvent) of a timing event chain. **Tags:** atp.Splitkey=stimulus xml.sequenceOffset=10

Table 2.14: TimingDescriptionEventChain

Depending on the value of the categorys of the TimingDescriptionEventChain, it may be used in different use-cases.

[TPS_TIMEX_00110] Standardized categorys of TimingDescriptionEvent-Chain ⌈AUTOSAR standardizes the following categorys of TimingDescription-EventChain and their semantics:

- undefined: as per STANDARD
- STANDARD: No specific semantics are imposed on the TimingDescription-EventChain. It indicates the standard behavior.
- LET_INTERVAL: The TimingDescriptionEventChain represents a Logical Execution Time interval.
- SL_LET_INTERVAL: The TimingDescriptionEventChain represents a System Level Logical Execution Time interval

⌋

[constr_4515] Orthogonality of stimulus and response in a TimingDescriptionEventChain

Imposition time: IT_TimingViewReady

⌈The reference TimingDescriptionEventChain.stimulus and the reference TimingDescriptionEventChain.response shall not reference the same TimingDescriptionEvent.shortName.⌋

[constr_6906] Conformity of `stimulus` and `response` in a `TimingDescriptionEventChain`

Imposition time: `IT_TimingDescriptionReady`

⌈The `TimingDescriptionEvent`s referenced in the roles `stimulus` and `response` shall be of the same sub-class (of `TimingDescriptionEvent`)⌋

[constr_6895] Multiplicity of `TimingDescriptionEventChain.response`

Imposition time: `IT_TimingDescriptionReady`

⌈For each `TimingDescriptionEventChain`, the reference in the role `response` shall exist⌋

[constr_6896] Multiplicity of `TimingDescriptionEventChain.stimulus`

Imposition time: `IT_TimingDescriptionReady`

⌈For each `TimingDescriptionEventChain`, the reference in the role `stimulus` shall exist⌋

Figure 2.15 shows an event chain "End-to-End Timing" describing the causal dependency between "Sensor" and "Actuator". The sequence of event chain segments shows the details of "End-to-End Timing" according to the AUTOSAR timing views.

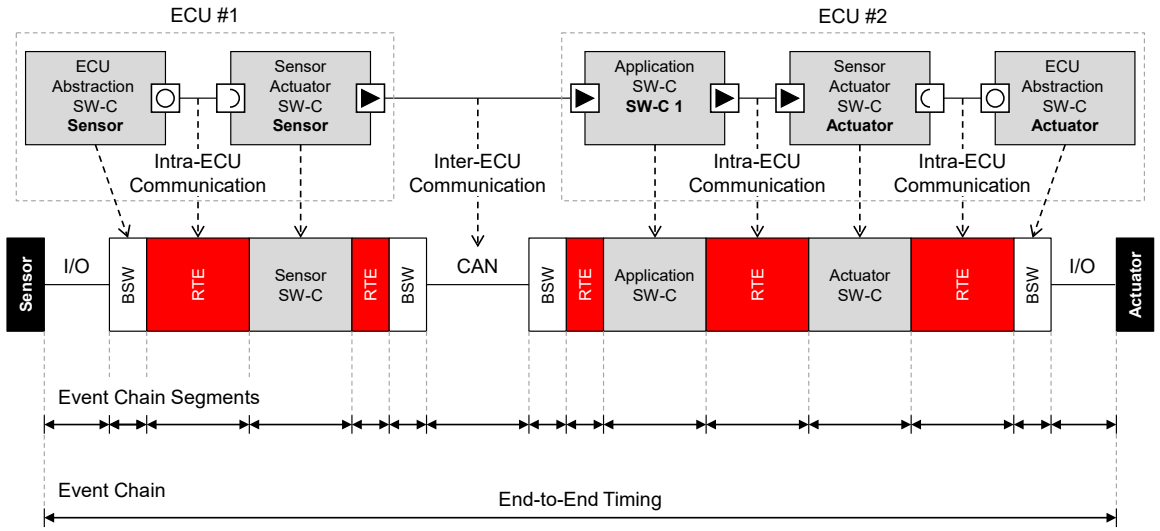

BSW Basic Software
RTE Runtime Environment
SW-C Software Component

Figure 2.15: Example of an end-to-end event chain between sensor sampling and actuator access

2.3.1.1 Segments

[TPS_TIMEX_00139] Completeness of a composed `TimingDescriptionEventChain` ⌈If a `TimingDescriptionEventChain` has > 0 `segment`s: after [constr_

4518] is applied, there shall be at least one end-to-end path from the parental TimingDescriptionEventChain.stimulus, through the segments, to the parental TimingDescriptionEventChain.response⌋

[constr_6921] Disallow TimingDescriptionEventChain segmental circular-referencing

Imposition time: IT_TimingViewReady

⌈A TimingDescriptionEventChain.segment shall never reference the (parent) TimingDescriptionEventChain in which it is referenced in the role segment.⌋

[constr_4518] Specifying end-points of a composed TimingDescriptionEventChain

Imposition time: IT_TimingViewReady

⌈If a TimingDescriptionEventChain has > 0 segments: in *that* list of segments:

- at least one segment.stimulus shall reference the (parent) TimingDescriptionEventChain.stimulus in which it is referenced in the role segment
- at least one segment.response shall reference the (parent) TimingDescriptionEventChain.response in which it is referenced in the role segment

⌋

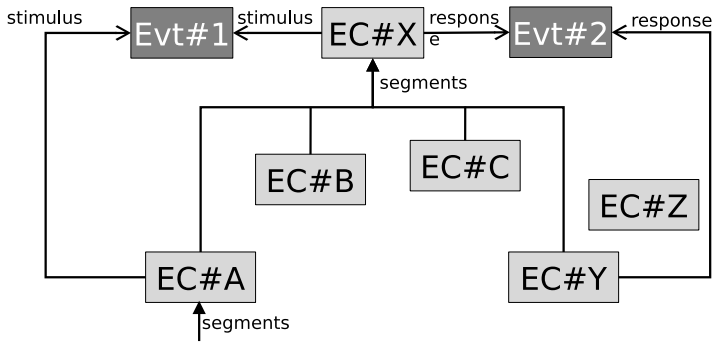

Figure 2.16: TimingDescriptionEventChain with segments

2.3.1.2 Approach

The following subsections describe how to structure event chains for systems. Depending on the pre-conditions two different approaches can be distinguished: top-down (decomposition) and bottom-up (composition).

The decomposition respectively composition of event chains can be performed according to the software component hierarchy, but does not necessarily have to follow this

hierarchy. The primary purpose is to increase respectively decrease granularity of the timing descriptions.

Note that event chains are used in all AUTOSAR timing views and any composition and decomposition of event chains can be done across various AUTOSAR timing views.

2.3.1.2.1 Decomposition

In a first step the time critical path in the system is identified. This means that a causal relationship between a stimulus event and response event is described by an event chain. For this event chain a timing constraint is specified describing the time budget. The second step is to decompose this event chain into event chain segments which implies that the given time budget gets split (decomposed) too.

Since event chain segments are event chains as well, these event chain segments can be subject to further decomposition.

Figure 2.17 shows a time critical path between the event "requesting the brake pedal position" (*stimulus*) and the event "making available the determined vehicle speed" (*response*). This event chain (EC) is subject to a timing constraint, namely a `LatencyTimingConstraint`, and is budgeted accordingly. For example, the time budget for the event chain EC is constrained by a maximum latency of $2ms$.

In subsequent steps of the development and with deeper knowledge about the system's dynamics, this event chain and its time budget can be split across the system's components. This results in the event chain segments $EC1$, $EC2$ and $EC3$ and their appropriate time budgets.

It is the typical role of a dedicated timing analysis tool to enforce checks on the chains and their budgets such that, in this example at least: the sum of the segmental time budgets does not exceed the parental given time budget of $2ms$. This is not explicitly constrained in TIMEX itself because that business logic should reside in the timing tool.

2.3.1.2.2 Composition

In the first step the system is build up based on available software components including timing descriptions. In the second step available event chains are connected with each other. This results in a sequence of event chains where the response event of one event chain has the role of the stimulus event of the subsequent event chain. In the third step, a high-level event chain is specified based on a sequence of available event chains which play the role of event chain *segments*. For this high-level event chain a time budget shall be specified. Finally, the aggregated time budget needs to be assessed if acceptable which means that the aggregated time budget shall be equal or less than the time budget of the high-level event chain.

Figure 2.17 shows the connected event chains $EC1$, $EC2$ and $EC3$. For each event chain a time budget, using a `LatencyTimingConstraint`, is specified: The time

budget of event chain $EC1$ is $0.5ms$, of event chain $EC2$ is $0.6ms$ and of event chain $EC3$ is $0.7ms$. The high-level event chain EC is a composition of the event chains $EC1$, $EC2$ and $EC3$. The stimulus event of the high-level event chain is the event "requesting the brake pedal position" (*Stimulus*) and the response event of the high-level event chain is the event "making available the determined vehicle speed" (*Response*). Eventually, a time budget is assigned to the high-level event chain using a `LatencyTimingConstraint`, for example $2ms$. This value is consistent with the aggregated time budget of the event chain segments $(0.5ms + 0.6ms + 0.7ms = 1.8ms)$.

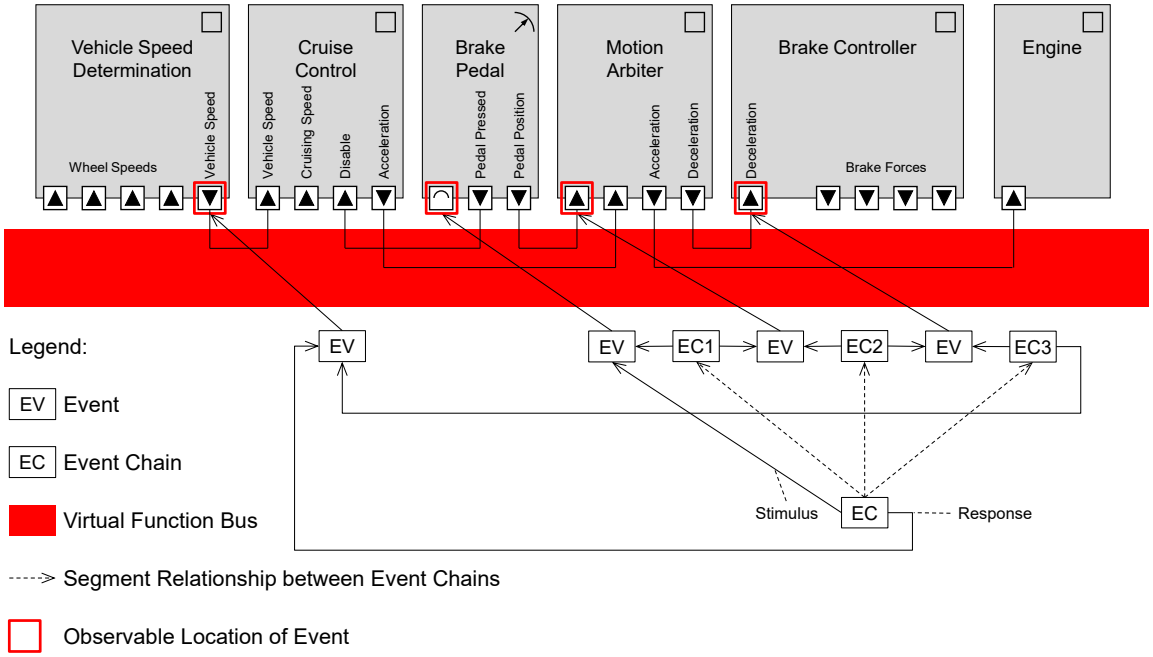

Figure 2.17: Example of a composed and decomposed event chain

2.3.1.3 Patterns

A sequence or hierarchy of event chains can form complex structures. However, if one of the aforementioned approaches is correctly followed then there is only a handful of patterns applicable. These patterns are introduced in the following with a simple example.

2.3.1.3.1 Sequence

The most frequently used pattern is the sequence of events. Such a sequence describes a succession of causally related events without an alternative path.

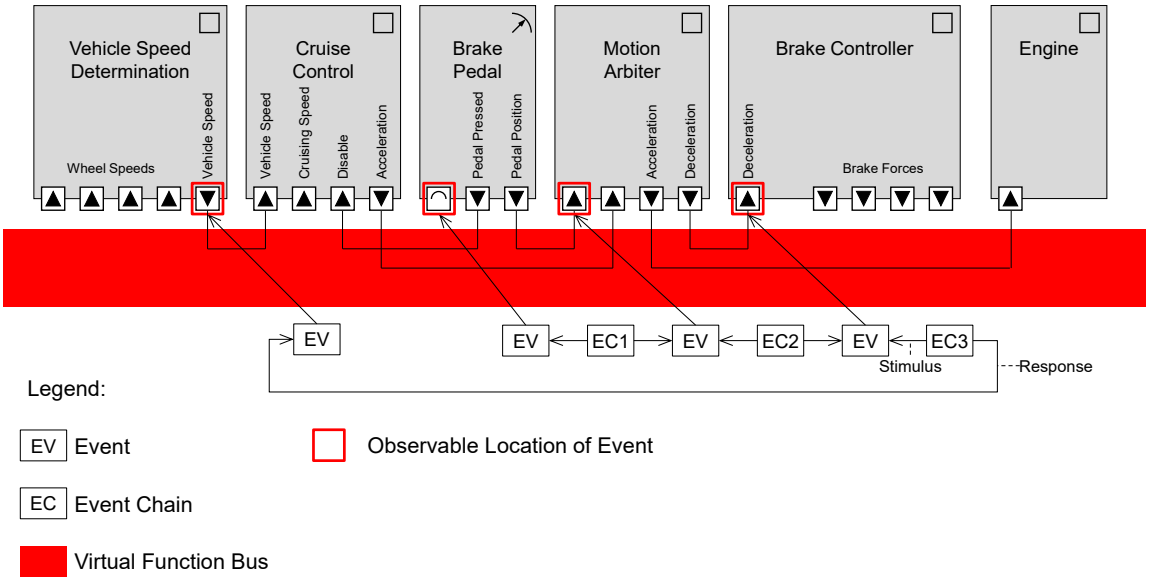

Figure 2.18: Example of the ”Sequence” pattern

An example for this pattern is depicted in Figure 2.18. The event chains $EC1$ through $EC3$ define a causal relationship of events observed at a port of the SWC called *Brake Pedal* and a port of the SWC called *Vehicle Speed Determination*.

2.3.1.3.2 Fork

The ”Fork” pattern describes the constellation where several event chains have one common stimulus event and different response events.

The pattern is illustrated in Figure 2.19, which shows a path that forks because the SWC *Brake Controller* calculates the brake force value for each wheel ($EC5$ through $EC8$).

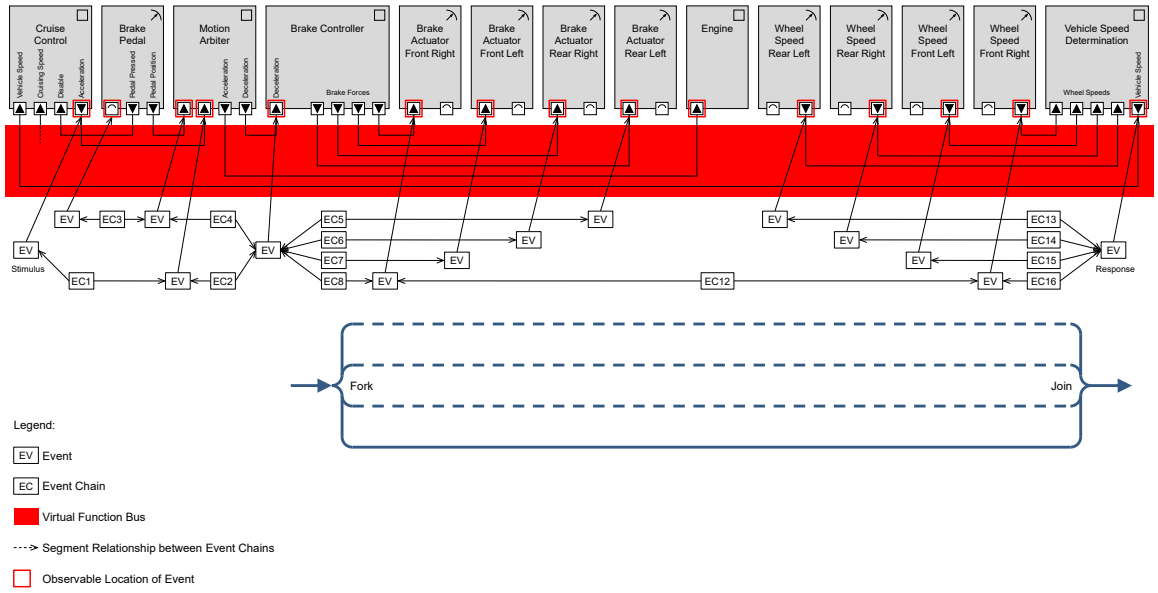

Figure 2.19: Example of the ”Fork” and ”Join” pattern

2.3.1.3.3 Join

The ”Join” pattern describes the constellation where several event chains have one common response event and different stimulus events.

The pattern is illustrated in Figure 2.19 which shows a path that joins because the SWC *Vehicle Speed Determination* aggregates the wheel speed values from individual wheels ($EC13$ through $EC16$).

2.3.1.3.4 Alternative

The ”Alternative” pattern describes the constellation where more than one path between a stimulus and response event exists. This implies that at least one ”Fork” is followed by at least one ”Join”.

The pattern is illustrated in Figure 2.20 which shows that an event observed at a required port of the SWC *Motion Arbiter* leads to an occurrence of an event either at the port called *Deceleration* of the SWC *Brake Controller*, or at the port called *Acceleration* of the SW-C *Engine*. These alternative causal relationships are described by the event chains $EC2$ and $EC4$ in this figure. In either case, the deceleration or acceleration of the vehicle leads to the occurrence of an event at the provided port called *Vehicle Speed* of the SW-C *Vehicle Speed Determination* reporting the vehicle’s speed. These alternative causal relationships are described by the event chains $EC3$ and $EC5$ which both reference the same response event. To fulfill the overall event chain, only one of the alternative paths shall have occurred.

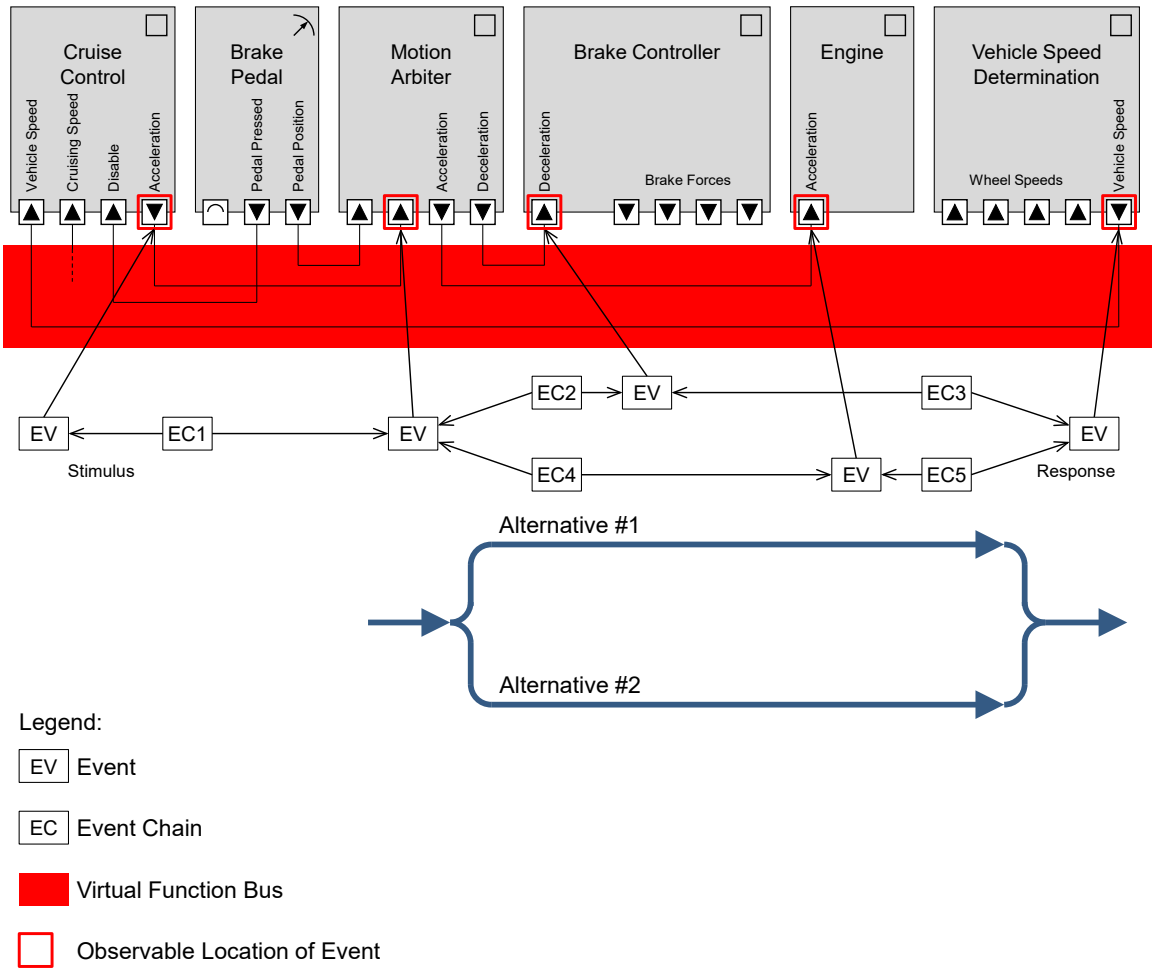

Figure 2.20: Example of the ”Alternative” pattern

2.3.1.3.5 Cycle

The ”Cycle” pattern describes the constellation where a path from the response event of an event chain leads to the stimulus of this event chain.

The pattern is illustrated in Figure 2.21 which shows three event chains $EC8$, $EC12$ and $EC17$ forming a cycle. The stimulus event of event chain $EC8$ is the response event of event chain $EC17$; and the response event of event chain $EC12$ is the stimulus event of event chain $EC17$. Event chain $EC8$ and $EC12$ reference the same event in different roles, namely response event from event chain $EC8$ perspective and stimulus event from the event chain $EC12$ perspective.

Note that an event chain referencing the same event for its stimulus and its response is forbidden according to the constraint [constr_4515]. As a consequence a cycle consists of at least two event chains.

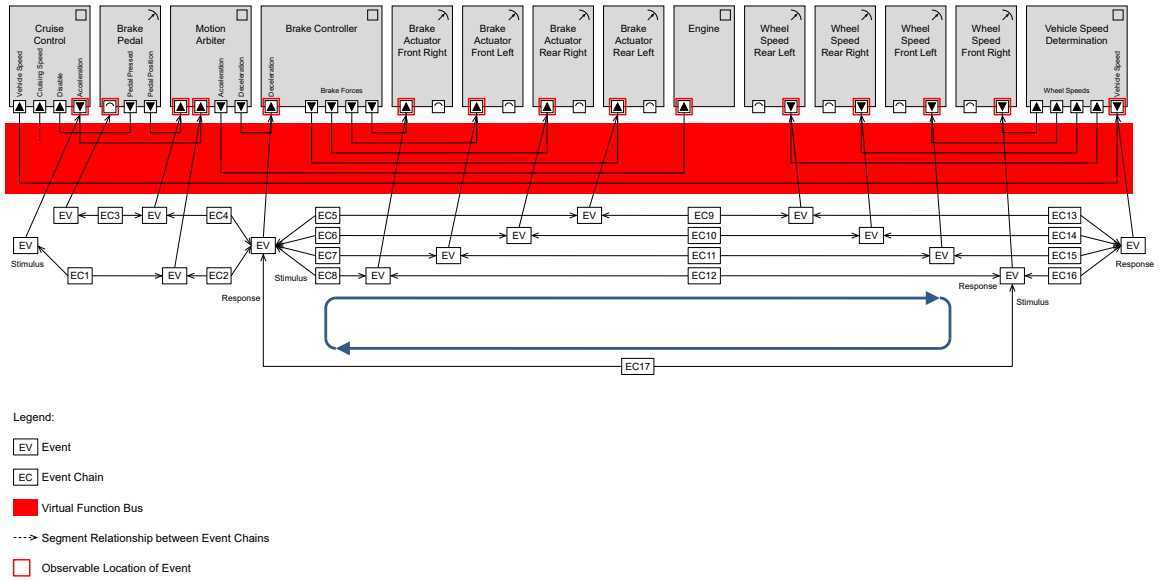

Figure 2.21: Example of the ”Cycle” pattern

2.3.2 TimingDescriptionEvent

`TimingDescriptionEvent`s refer to locations in systems at which the *occurrences* of events are observed at runtime. TIMEX defines a set of predefined `TimingDescriptionEvent` types for use in differing *observable locations* and further in differing Timing Views (2.1).

For example, this can be the start of a `RunnableEntity` or storing a frame in the hardware buffer of a communication controller.

An overview of the different event types is given in Figure 2.22. These are described in more detail in the following sub-sections.

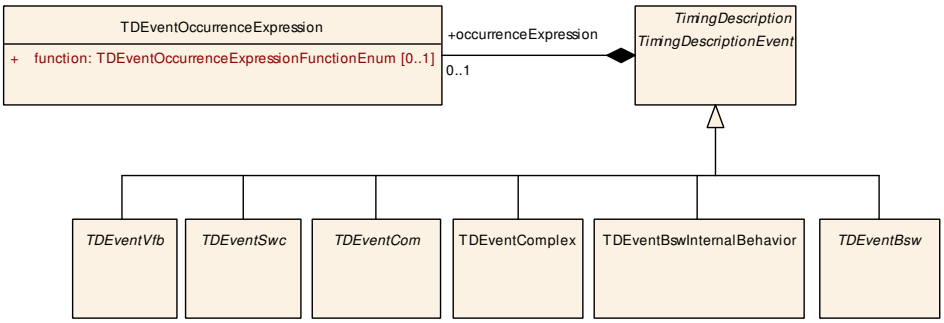

Figure 2.22: Overview of the different types of timing events

Depending on the value of the `category` of the `TimingDescriptionEvent`, it may be used in different use-cases.

[TPS_TIMEX_00056] Standardized `category`s of `TimingDescriptionEvent` in Classic Platform ⌈AUTOSAR standardizes the following `category`s of `TimingDescriptionEvent` and their semantics:

- `undefined`: as per `STANDARD`
- `STANDARD`: No specific semantics are imposed on the `TimingDescriptionEvent`. It indicates the standard behavior.
- `LET_RELEASE`: The `TimingDescriptionEvent` represents the release/start point of an LET interval
- `LET_TERMINATE`: The `TimingDescriptionEvent` represents the termination/end point of an LET interval
- `DISPATCH_ENTRY_POINT`: The `TimingDescriptionEvent` marks the *dispatcher entry point* of a timing description event chain describing a dispatcher associated with a software cluster
- `DISPATCH_EXIT_POINT`: The `TimingDescriptionEvent` marks the *dispatcher exit point* of a timing description event chain describing a dispatcher associated with a software cluster

⌋

Also note that information regarding the occurrence of a `TimingDescriptionEvent` is described separately in 2.4.1.2.

2.3.2.1 TDEventVfb

Events related to the VFB can be used during the specification of:

- `VfbTiming` 2.1.1
- `SystemTiming` 2.1.3
- `SwcTiming` 2.1.2
- `EcuTiming` 2.1.5

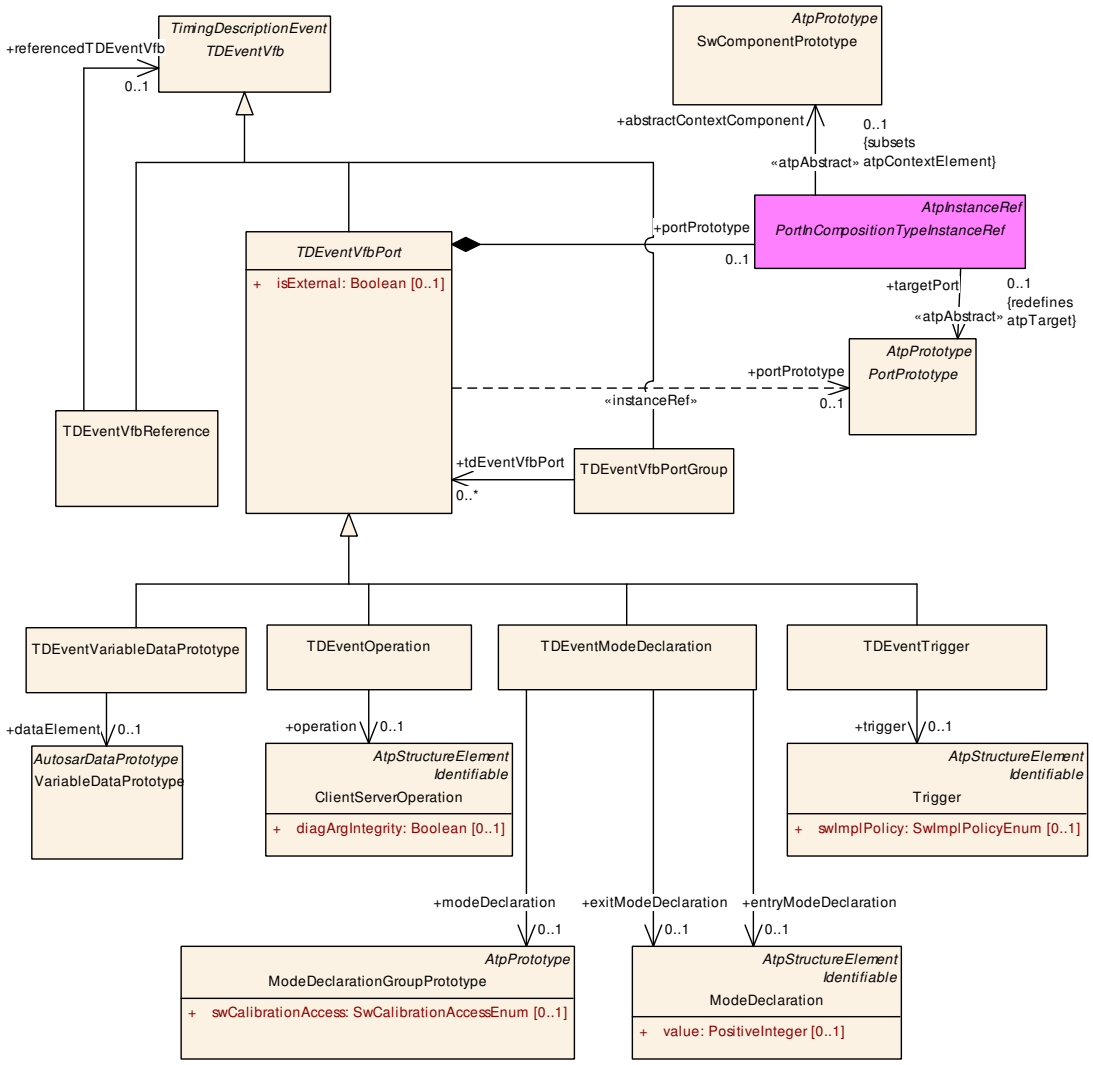

Figure 2.23: VFB events

Class	***TDEventVfb*** (abstract)			
Note	A `TimingDescriptionEvent` occuring on a Virtual Functional Bus (VFB) `PortPrototype`.			
Base	*ARObject*, *Identifiable*, *MultilanguageReferrable*, *Referrable*, *TimingDescription*, *TimingDescriptionEvent*			
Subclasses	*TDEventVfbPort*, TDEventVfbPortGroup, TDEventVfbReference			
Aggregated by	*TimingExtension*.timingDescription			
Attribute	***Type***	***Mult.***	***Kind***	***Note***
–	–	–	–	–

Table 2.15: TDEventVfb

2.3.2.1.1 TDEventVfbReference

Class	TDEventVfbReference			
Note	Reference to "other" TimingDescriptionEvents. These other TimingDescriptionEvents may be specified in other TimingExtensions (Timing Views) and re-used in this view.			
Base	ARObject, Identifiable, MultilanguageReferrable, Referrable, TDEventVfb, TimingDescription, TimingDescriptionEvent			
Aggregated by	TimingExtension.timingDescription			
Attribute	**Type**	**Mult.**	**Kind**	**Note**
referenced TDEventVfb	TDEventVfb	0..1	ref	The referenced timing description event. **Tags:** atp.Splitkey=referencedTDEventVfb

Table 2.16: TDEventVfbReference

[constr_6886] Multiplicity of TDEventVfbReference.referencedTDEventVfb

Imposition time: IT_TimingViewReady

⌈For each TDEventVfbReference, the reference to TDEventVfb in the role referencedTDEventVfb shall exist⌋

2.3.2.1.2 TDEventVfbPort

A TDEventVfbPort describes a TimingDescriptionEvent on the level of a PortPrototype. Since PortPrototypes are typed by different types of PortInterfaces whose usage is further broken down into the type of Operation/Data on that PortInterface, the sub-classing of TDEventVfbPort has been further divided into similar usages:

- TDEventVariableDataPrototype: the sending/receiving of a dataElement
- TDEventOperation: making/receiving a function call, sending/receiving a response
- TDEventTrigger: the sending/receiving of a Trigger
- TDEventModeDeclaration: mode switching

Due to instantiation principles, the referenced elements from these TDEventVfbPorts, may be multiply instantiated, thus a TDEventVfbPort always needs to refer to the SWC context in the role TDEventVfbPort.portPrototype. The meta-class TDEventVfbPortGroup is used to provide a grouping element for TDEventVfbPorts. This permits referencing a group of TDEventVfbPorts in a TimingDescriptionEventChain.stimulus or TimingDescriptionEventChain.response, e.g. a group of TDEventVariableDataPrototypes.

To permit some flexibility of referencing PortPrototypes on a system level (i.e. on heterogenous platform deployments), there are currently no general constraints that the grouped PortPrototypes must be all from the same SWC. This may be overridden for specific usages of a TDEventVfbPortGroup (e.g. SL-LET) in future. The usage is fully dependent on the multiplicity patterns for the type of PortInterface in

which, after the multiplicity rules for the type of PortInterface see [6], [5] are applied to the stimulus or response, permits a multiplicity > 1 for a TDEventVfbPort.

Class	***TDEventVfbPort*** (abstract)			
Note	A TimingDescriptionEvent occuring on a PortPrototype.			
Base	*ARObject*, *Identifiable*, *MultilanguageReferrable*, *Referrable*, *TDEventVfb*, *TimingDescription*, *TimingDescriptionEvent*			
Subclasses	TDEventModeDeclaration, TDEventOperation, TDEventTrigger, TDEventVariableDataPrototype			
Aggregated by	*TimingExtension*.timingDescription			
Attribute	***Type***	***Mult.***	***Kind***	***Note***
isExternal	Boolean	0..1	attr	This attribute is used to refer to external events that are related to hardware I/O, like physical sensors and actuators, at Virtual Functional Bus (VFB) level. This Attribute is only used by the AUTOSAR Classic Platform.
portPrototype	PortPrototype	0..1	iref	PortPrototype on which the TimingEvent occurs **Tags:** atp.Splitkey=portPrototype, portPrototype.contextComponent, portPrototype.targetPPort, portPrototype.targetRPort **InstanceRef implemented by:** PortInCompositionTypeInstanceRef
portPrototypeBlueprint	PortPrototypeBlueprint	0..1	ref	port on which the TimingEvent shall apply (in the context of an AUTOSAR blueprint) **Tags:** atp.Splitkey=portPrototypeBlueprint

Table 2.17: TDEventVfbPort

[constr_6885] Multiplicity of TDEventVfbPort.isExternal

Imposition time: IT_TimingViewReady

⌈For each TDEventVfbPort, the attribute isExternal shall exist⌋

In order to support the description of timing events for hardware I/O already at VFB-level (e.g. in order to refer to the point in time where data is generated by a physical sensor) without having the need to specify the concrete sensor hardware, it is necessary to specify the attribute isExternal.

If for a timing event of type TDEventVfbPort the attribute is set to ”TRUE”, then the timing event refers to the point in time where the data is generated/processed by the corresponding hardware I/O.

If the attribute is set to ”FALSE”, then the timing event refers to the point in time where the data enters or leaves the respective port of the component at VFB-level.

2.3.2.1.2.1 TDEventVariableDataPrototype

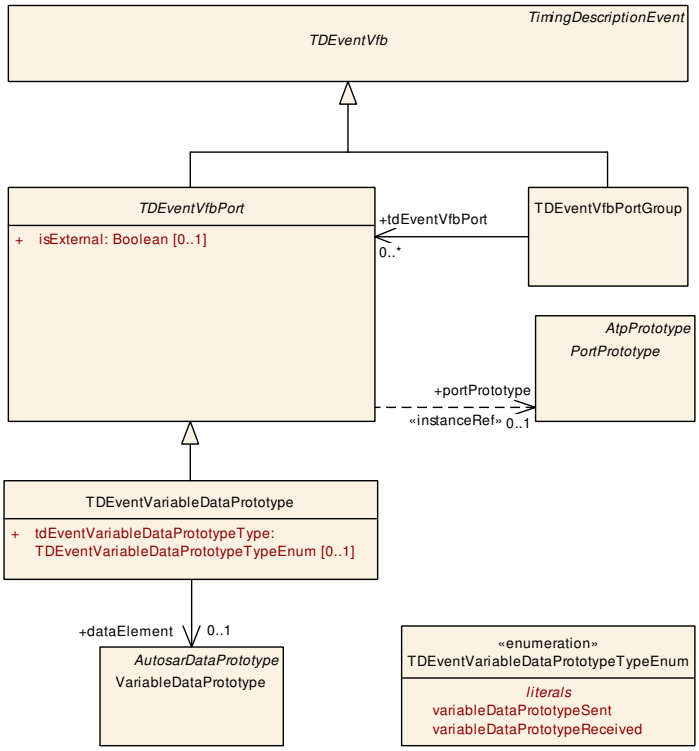

Figure 2.24: Variable Data Prototype

Class	**TDEventVariableDataPrototype**			
Note	A `TimingDescriptionEvent` triggered by the sending/receiving of a `VariableDataPrototype` in a `SenderReceiverInterface` on VFB level.			
Base	*ARObject*, *Identifiable*, *MultilanguageReferrable*, *Referrable*, *TDEventVfb*, *TDEventVfbPort*, *Timing Description*, *TimingDescriptionEvent*			
Aggregated by	*TimingExtension*.timingDescription			
Attribute	***Type***	***Mult.***	***Kind***	***Note***
dataElement	VariableDataPrototype	0..1	ref	The referenced `VariableDataPrototype` from a `SenderReceiverInterface`. **Tags:** atp.Splitkey=dataElement
tdEventVariable DataPrototype Type	TDEventVariableData PrototypeTypeEnum	0..1	attr	The specific type of this timing event.

Table 2.18: TDEventVariableDataPrototype

[constr_6887] Multiplicity of `TDEventVariableDataPrototype.tdEvent-VariableDataPrototypeType`

Imposition time: `IT_TimingViewReady`

⌈For each `TDEventVariableDataPrototype`, the attribute `tdEventVariable-DataPrototypeType` shall exist⌋

[constr_6888] Multiplicity of `TDEventVariableDataPrototype.dataElement`

Imposition time: `IT_TimingViewReady`

⌈For each `TDEventVariableDataPrototype`, the reference to `VariableDataPrototype` in the role `dataElement` shall exist⌋

Enumeration	**TDEventVariableDataPrototypeTypeEnum**
Note	This is used to describe the specific event type of a TDEventVariableDataPrototype
Aggregated by	TDEventVariableDataPrototype.tdEventVariableDataPrototypeType
Literal	***Description***
variableData PrototypeReceived	A point in time where the referenced variable data prototype has been successfully transmitted and is available in the related communication buffer (of the RTE) for the receiving SWC. **Tags:** atp.EnumerationLiteralIndex=0
variableData PrototypeSent	A point in time where the referenced variable data prototype has been successfully sent out by the sending SWC, so that it is available in the related communication buffer (of the RTE) for transmission. **Tags:** atp.EnumerationLiteralIndex=1

Table 2.19: TDEventVariableDataPrototypeTypeEnum

2.3.2.1.2.2 TDEventOperation

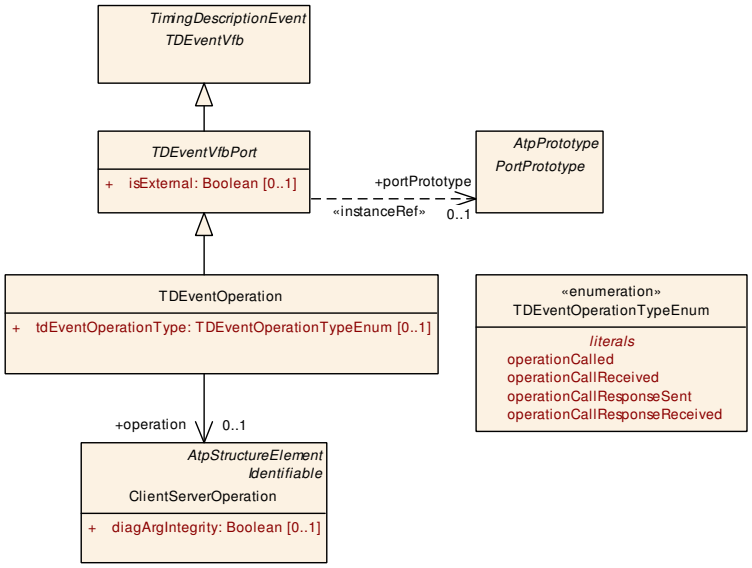

Figure 2.25: Operation

Class	**TDEventOperation**			
Note	A `TimingDescriptionEvent` triggered by the sending/receiving or invocation/return of a `ClientServerOperation` in a `ClientServerInterface` on VFB level.			
Base	*ARObject*, *Identifiable*, *MultilanguageReferrable*, *Referrable*, *TDEventVfb*, *TDEventVfbPort*, *TimingDescription*, *TimingDescriptionEvent*			
Aggregated by	*TimingExtension*.timingDescription			
Attribute	***Type***	***Mult.***	***Kind***	***Note***

△

Class	**TDEventOperation**			
operation	ClientServerOperation	0..1	ref	The referenced `ClientServerOperation` from a `ClientServerInterface`. **Tags:** atp.Splitkey=operation
tdEvent OperationType	TDEventOperationType Enum	0..1	attr	The specific type of this timing event.

Table 2.20: TDEventOperation

[constr_6889] Multiplicity of `TDEventOperation.tdEventOperationType`

Imposition time: `IT_TimingViewReady`

⌈For each `TDEventOperation`, the attribute `tdEventOperationType` shall exist⌋

[constr_6890] Multiplicity of `TDEventOperation.operation`

Imposition time: `IT_TimingViewReady`

⌈For each `TDEventOperation`, the reference to `ClientServerOperation` in the role `operation` shall exist⌋

Enumeration	**TDEventOperationTypeEnum**
Note	This is used to describe the specific event type of a TDEventOperation.
Aggregated by	TDEventOperation.tdEventOperationType
Literal	***Description***
operationCalled	A point in time where the referenced operation is called by the client SWC. **Tags:** atp.EnumerationLiteralIndex=0
operationCall Received	A point in time where the call of the referenced operation is received by the server SWC. **Tags:** atp.EnumerationLiteralIndex=1
operationCall ResponseReceived	A point in time where the client SWC has received the response of the referenced operation call. **Tags:** atp.EnumerationLiteralIndex=2
operationCall ResponseSent	A point in time where the server SWC has terminated with the execution of the referenced operation, and has sent out a response. **Tags:** atp.EnumerationLiteralIndex=3

Table 2.21: TDEventOperationTypeEnum

2.3.2.1.2.3 TDEventModeDeclaration

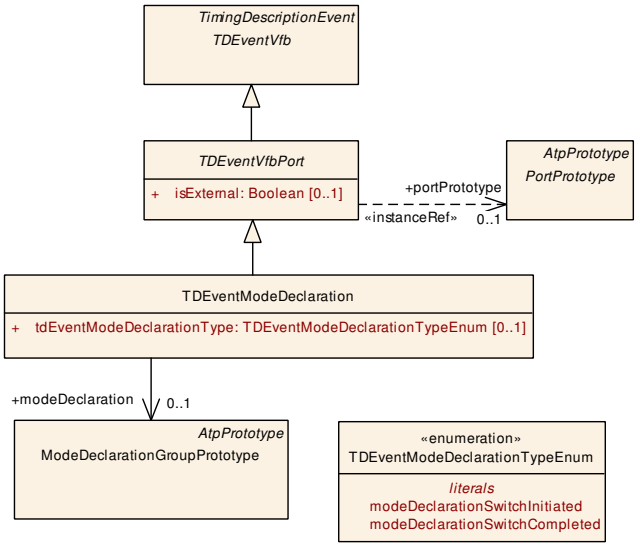

Figure 2.26: Mode Declaration

Class	**TDEventModeDeclaration**			
Note	A `TimingDescriptionEvent` triggered by the initiation/propagation of a mode switch in a `ModeSwitchInterface` on VFB level.			
Base	*ARObject*, *Identifiable*, *MultilanguageReferrable*, *Referrable*, *TDEventVfb*, *TDEventVfbPort*, *Timing Description*, *TimingDescriptionEvent*			
Aggregated by	*TimingExtension*.timingDescription			
Attribute	***Type***	***Mult.***	***Kind***	***Note***
entryMode Declaration	ModeDeclaration	0..1	ref	Optional parameter which refines the scope of the TDEventModeDeclaration. If the parameter is set, the event occurs only if the mode declaration group prototype instance shall enter into the referenced ModeDeclaration. **Tags:** atp.Splitkey=entryModeDeclaration
exitMode Declaration	ModeDeclaration	0..1	ref	Optional parameter which refines the scope of the TDEventModeDeclaration. If the parameter is set, the event occurs only if the mode declaration group prototype instance shall exit from the referenced ModeDeclaration. **Tags:** atp.Splitkey=exitModeDeclaration
mode Declaration	ModeDeclarationGroup Prototype	0..1	ref	The referenced `ModeDeclarationGroupPrototype` from a{ModeSwitchInterface}]. **Tags:** atp.Splitkey=modeDeclaration
tdEventMode DeclarationType	TDEventMode DeclarationTypeEnum	0..1	attr	The specific type of this timing event.

Table 2.22: TDEventModeDeclaration

[constr_6891] Multiplicity of `TDEventModeDeclaration.tdEventMode-DeclarationType`

Imposition time: `IT_TimingViewReady`

⌈For each `TDEventModeDeclaration`, the attribute `tdEventModeDeclaration-Type` shall exist⌋

[constr_6892] Multiplicity of `TDEventModeDeclaration.modeDeclaration`

Imposition time: `IT_TimingViewReady`

⌈For each `TDEventModeDeclaration`, the reference to `ModeDeclarationGroupPrototype` in the role `modeDeclaration` shall exist⌋

Enumeration	**TDEventModeDeclarationTypeEnum**
Note	This is used to describe the specific event type of a TDEventModeDeclaration
Aggregated by	TDEventModeDeclaration.tdEventModeDeclarationType
Literal	***Description***
modeDeclaration SwitchCompleted	A point in time where the switch to the associated ModeDeclarationGroupPrototype has been completed. **Tags:** atp.EnumerationLiteralIndex=0
modeDeclaration SwitchInitiated	A point in time where the switch to the associated ModeDeclarationGroupPrototype has been initiated. **Tags:** atp.EnumerationLiteralIndex=1

Table 2.23: TDEventModeDeclarationTypeEnum

2.3.2.1.2.4 TDEventTrigger

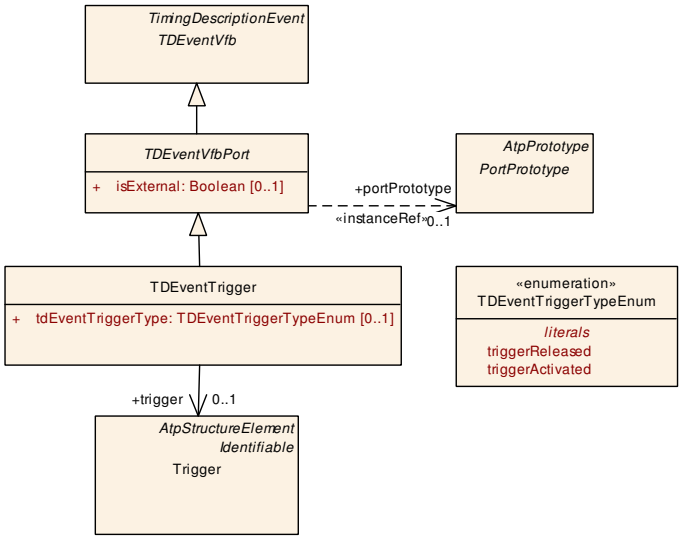

Figure 2.27: Trigger

Class	**TDEventTrigger**			
Note	A `TimingDescriptionEvent` triggered by the activation and release of a `Trigger` in a `TriggerInterface` on VFB level.			
Base	*ARObject*, *Identifiable*, *MultilanguageReferrable*, *Referrable*, *TDEventVfb*, *TDEventVfbPort*, *TimingDescription*, *TimingDescriptionEvent*			
Aggregated by	*TimingExtension*.timingDescription			
Attribute	***Type***	***Mult.***	***Kind***	***Note***

▽

△

Class	**TDEventTrigger**			
tdEventTrigger Type	TDEventTriggerType Enum	0..1	attr	The specific type of this timing event.
trigger	Trigger	0..1	ref	The referenced `Trigger` from a `TriggerInterface`. **Tags:** atp.Splitkey=trigger

Table 2.24: TDEventTrigger

[constr_6893] Multiplicity of `TDEventTrigger.tdEventTriggerType`

Imposition time: `IT_TimingViewReady`

⌈For each `TDEventTrigger`, the attribute `tdEventTriggerType` shall exist⌋

[constr_6894] Multiplicity of `TDEventTrigger.trigger`

Imposition time: `IT_TimingViewReady`

⌈For each `TDEventTrigger`, the reference to `Trigger` in the role `trigger` shall exist⌋

Enumeration	**TDEventTriggerTypeEnum**
Note	This is used to describe the specific event type of a TDEventTrigger.
Aggregated by	TDEventTrigger.tdEventTriggerType
Literal	*Description*
triggerActivated	A point in time where the referenced trigger has been successfully released and is activating runnable entities of the receiving SW-C. **Tags:** atp.EnumerationLiteralIndex=0
triggerReleased	A point in time where the referenced trigger has been successfully released by the emitting SW-C. **Tags:** atp.EnumerationLiteralIndex=1

Table 2.25: TDEventTriggerTypeEnum

2.3.2.1.2.5 Blueprinting TDEventVfbPort

The primary purpose of blueprinting `VfbTiming` is for use with a "AUTOSAR Application Interface" [7]. In a blueprint of an "AUTOSAR Application Interface", a `TimingConstraint` can be applied to `TDEventVfb` to annotate a high-level timing goal for an blueprinted `PortPrototype`. The reference `portPrototypeBlueprint` refers to a `PortPrototypeBlueprint` which effectively wraps a `PortPrototype` used in the context of an AUTOSAR Blueprint, but, permits certain extra aspects over a `PortPrototype` as explained in "Blueprinting PortPrototype" [4].

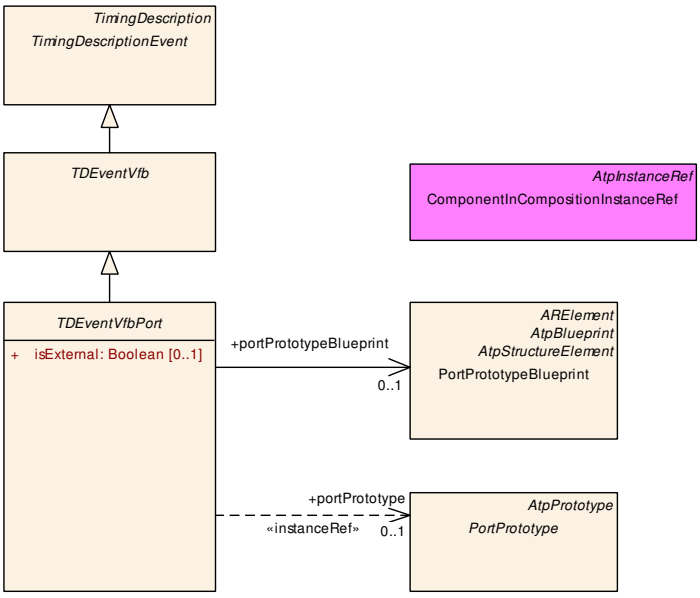

Figure 2.28: `TDEventVfb` Blueprint

[constr_4508] Multiplicity of `TDEventVfbPort.portPrototypeBlueprint`

Imposition time: `IT_TimingViewReady`

⌈The reference `TDEventVfbPort.portPrototypeBlueprint` shall exist only if the immediate parent is `ARPackage.category==BLUEPRINT`⌋

[constr_6900] Dual existence of `TDEventVfb.portPrototype` and `TDEventVfb.portPrototypeBlueprint`

Imposition time: `IT_TimingViewReady`

⌈The reference `TDEventVfbPort.portPrototype` and `TDEventVfbPort.portPrototypeBlueprint` shall not co-exist in a model⌋

2.3.2.2 TDEventSwc

The timing description element `TDEventSwc` is used to observe all aspects related to a SWC context.

Class	***TDEventSwc*** (abstract)			
Note	This is the abstract parent class to describe timing events at Software Component (SW-C) level. This Class is only used by the AUTOSAR Classic Platform.			
Base	*ARObject*, *Identifiable*, *MultilanguageReferrable*, *Referrable*, *TimingDescription*, *TimingDescriptionEvent*			
Subclasses	TDEventSwcInternalBehavior, TDEventSwcInternalBehaviorReference			
Aggregated by	*TimingExtension*.timingDescription			
Attribute	**Type**	**Mult.**	**Kind**	**Note**

△

Class	***TDEventSwc*** (abstract)			
component	SwComponent Prototype	0..1	iref	The context for the scope of this timing event. **Tags:** atp.Splitkey=component, component.context Component, component.targetComponent **InstanceRef implemented by:** ComponentIn CompositionInstanceRef

Table 2.26: TDEventSwc

2.3.2.2.1 TDEventSwcInternalBehavior

The TDEventSwcInternalBehavior is used to describe timing events related to the state changes on RunnableEntitys - the possible states are given by TDEventSwc-InternalBehavior.tdEventSwcInternalBehaviorType. Additionally any potential data accesses by the RunnableEntity can be observed by this timing event. The context of the RunnableEntity shall be given by TDEventSwc.component.

The meta-class TDEventSwcInternalBehaviorReference is used to reference existing TDEventSwcInternalBehaviors already specified in other timing views with the aim of reusing them but with a different component context. It is permitted that they could be in other timing views than the current one, e.g. a TDEventSwc-InternalBehavior specified in a SwcTiming view can be referenced in a System-Timing view.

Timing events related to SwcInternalBehavior can be used during the specification of:

- SwcTiming 2.1.2
- SystemTiming 2.1.3
- EcuTiming 2.1.5

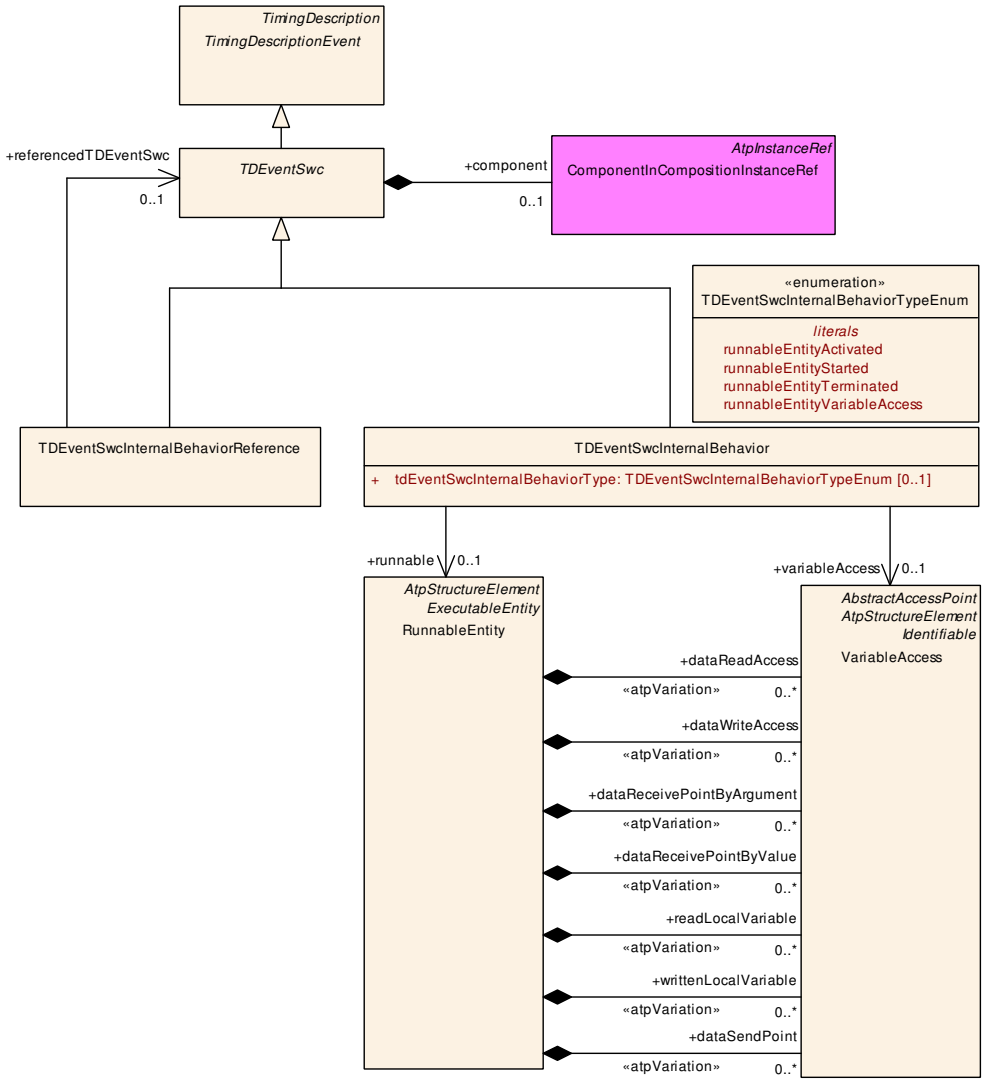

Figure 2.29: Event of type ”SwcInternalBehavior”

Class	**TDEventSwcInternalBehavior**			
Note	This is used to describe timing events related to the SwcInternalBehavior of an AtomicSwComponent Type. This Class is only used by the AUTOSAR Classic Platform.			
Base	*ARObject*, *Identifiable*, *MultilanguageReferrable*, *Referrable*, *TDEventSwc*, *TimingDescription*, *TimingDescriptionEvent*			
Aggregated by	*TimingExtension*.timingDescription			
Attribute	***Type***	***Mult.***	***Kind***	***Note***
runnable	RunnableEntity	0..1	ref	The scope of this timing event. **Tags:** atp.Splitkey=runnable
tdEventSwc InternalBehaviorType	TDEventSwcInternal BehaviorTypeEnum	0..1	attr	The specific type of this timing event.
variableAccess	VariableAccess	0..1	ref	The scope of this timing event. **Tags:** atp.Splitkey=variableAccess

Table 2.27: TDEventSwcInternalBehavior

Class	**TDEventSwcInternalBehaviorReference**			
Note	This is used to reference timing description events related to the Software Component (SW-C) view which are specified in other timing views. This Class is only used by the AUTOSAR Classic Platform.			
Base	*ARObject*, *Identifiable*, *MultilanguageReferrable*, *Referrable*, *TDEventSwc*, *TimingDescription*, *TimingDescriptionEvent*			
Aggregated by	*TimingExtension*.timingDescription			
Attribute	***Type***	***Mult.***	***Kind***	***Note***
referenced TDEventSwc	TDEventSwc	0..1	ref	The referenced timing description event. **Tags:** atp.Splitkey=referencedTDEventSwc

Table 2.28: TDEventSwcInternalBehaviorReference

2.3.2.2.1.1 TDEventSwcInternalBehaviorTypeEnum

Unlike OS tasks, there is no formal modeling of the run-states of a RunnableEntity. The nearest specification of the run-states of a RunnableEntity is given in [8, CP_SWS_RTE] 4.18 *"General state machine of an ExecutableEntity execution-instance"* (which themselves relate to the run-states of the OS task). This shall be the basis for those possible observation points in TDEventSwcInternalBehavior-TypeEnum related to the running status of the RunnableEntity.

Enumeration	**TDEventSwcInternalBehaviorTypeEnum**
Note	This is used to describe the specific event type of a TDEventSwcInternalBehavior. This Enumeration is only used by the AUTOSAR Classic Platform.
Aggregated by	TDEventSwcInternalBehavior.tdEventSwcInternalBehaviorType
Literal	***Description***
runnableEntity Activated	A point in time where the associated RunnableEntity has been activated, which means that it has entered the state "to be started". **Tags:** atp.EnumerationLiteralIndex=0
runnableEntity Started	A point in time where the associated RunnableEntity has entered the state "started" after its activation. **Tags:** atp.EnumerationLiteralIndex=1
runnableEntity Terminated	A point in time where the associated RunnableEntity has terminated and entered the state "suspended". **Tags:** atp.EnumerationLiteralIndex=2
runnableEntity VariableAccess	A point in time where the associated variable is accessed. **Tags:** atp.EnumerationLiteralIndex=3

Table 2.29: TDEventSwcInternalBehaviorTypeEnum

[constr_4512] Restriction of TDEventSwcInternalBehavior.variableAccess

Imposition time: IT_TimingViewReady

⌈The reference TDEventSwcInternalBehavior.variableAccess shall exist only if tdEventSwcInternalBehaviorType==runnableEntityVariable-Access.⌋

[constr_6882] Multiplicity of `TDEventSwcInternalBehavior.tdEventSwcInternalBehaviorType`

Imposition time: `IT_TimingViewReady`

⌈The attribute `TDEventSwcInternalBehavior.tdEventSwcInternalBehaviorType` shall exist⌋

[constr_6883] Multiplicity of `TDEventSwcInternalBehavior.runnable`

Imposition time: `IT_TimingViewReady`

⌈The reference `TDEventSwcInternalBehavior.runnable` shall exist⌋

[constr_6884] Multiplicity of `TDEventSwcInternalBehaviorReference.referencedTDEventSwc`

Imposition time: `IT_TimingViewReady`

⌈The reference `TDEventSwcInternalBehaviorReference.referencedTDEventSwc` shall exist⌋

2.3.2.3 TDEventCom

Events related to communication can be used during the specification of:

- `SystemTiming` 2.1.2
- `EcuTiming` 2.1.5

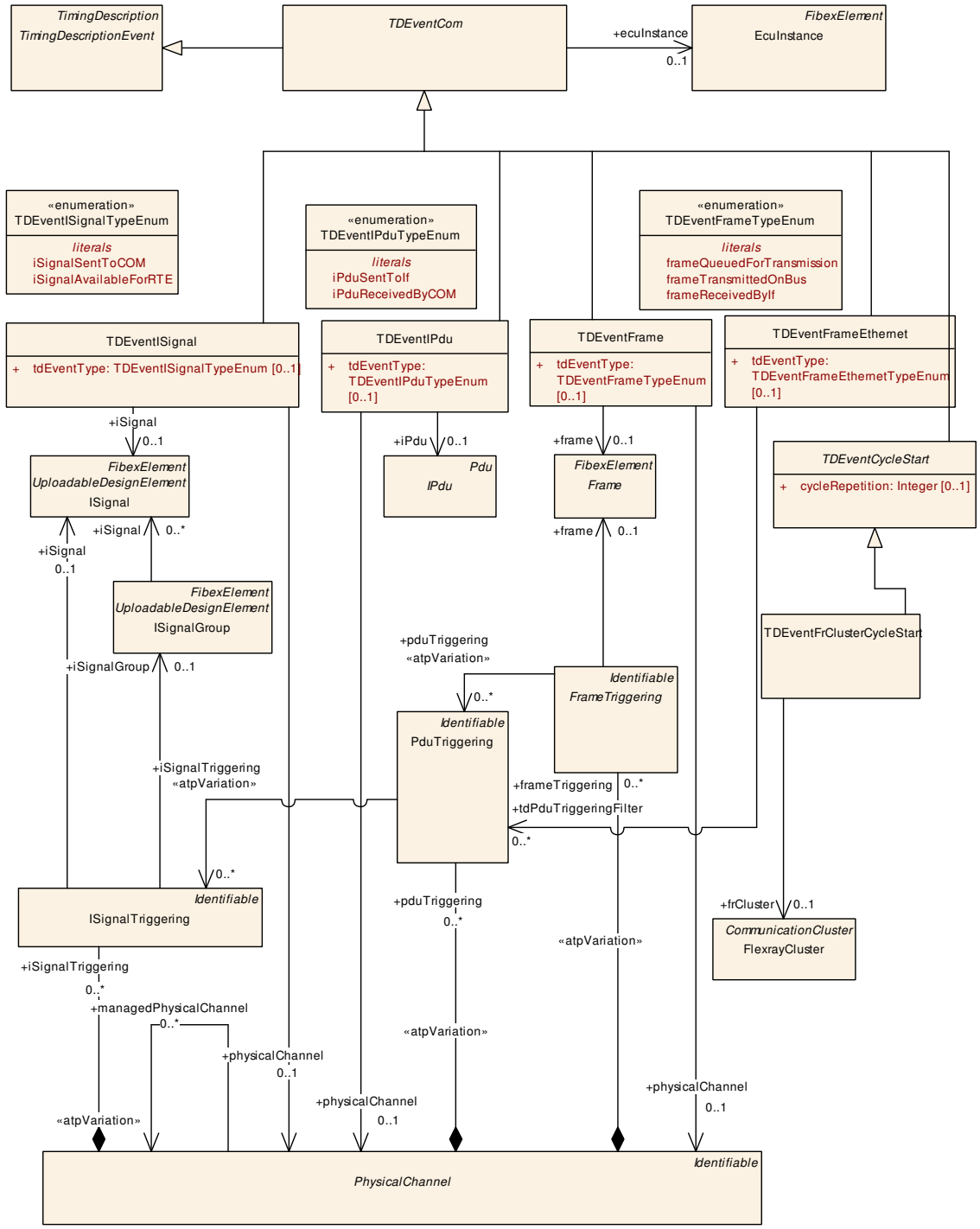

Figure 2.30: Events regarding communication

Class	***TDEventCom*** (abstract)
Note	Describes timing events related to communication in the system view
Base	*ARObject*, *Identifiable*, *MultilanguageReferrable*, *Referrable*, *TimingDescription*, *TimingDescriptionEvent*
Subclasses	*TDEventCycleStart*, TDEventFrame, TDEventFrameEthernet, TDEventIPdu, TDEventISignal
Aggregated by	*TimingExtension*.timingDescription

△

Class	*TDEventCom* (abstract)			
Attribute	***Type***	***Mult.***	***Kind***	***Note***
ecuInstance	EcuInstance	0..1	ref	The ECU context for a particular timing event. The link is optional, because the EcuInstance can not be defined for events of type TDEventCycleStart. **Tags:** atp.Splitkey=ecuInstance

Table 2.30: TDEventCom

2.3.2.3.1 TDEventISignal

Class	**TDEventISignal**			
Note	Describe timing events related to the exchange of `TDEventISignal`s between `COM` and `RTE`.			
Base	*ARObject*, *Identifiable*, *MultilanguageReferrable*, *Referrable*, *TDEventCom*, *TimingDescription*, *TimingDescriptionEvent*			
Aggregated by	*TimingExtension*.timingDescription			
Attribute	***Type***	***Mult.***	***Kind***	***Note***
iSignal	ISignal	0..1	ref	The scope of this timing event. **Tags:** atp.Splitkey=iSignal
physical Channel	PhysicalChannel	0..1	ref	The PhysicalChannel on which the ISignal is transmitted. **Tags:** atp.Splitkey=physicalChannel
tdEventType	TDEventISignalType Enum	0..1	attr	The specific type of this timing event.

Table 2.31: TDEventISignal

[constr_6915] Affinity of `ISignal` in `TDEventISignal`

Imposition time: `IT_TimingViewReady`

⌈The referenced `ISignal` in the role `TDEventISignal.iSignal` shall exist also in the list of `iSignal`s aggregated by `TDEventISignal.physicalChannel.iSignalTriggering`⌋

[constr_6864] Multiplicity of `TDEventISignal.tdEventType`

Imposition time: `IT_TimingViewReady`

⌈For each `TDEventISignal`, the attribute `tdEventType` shall exist⌋

[constr_6865] Multiplicity of `TDEventISignal.iSignal`

Imposition time: `IT_TimingViewReady`

⌈For each `TDEventISignal`, the reference to `ISignal` in the role `iSignal` shall exist⌋

[constr_6866] Multiplicity of TDEventISignal.physicalChannel

Imposition time: IT_TimingViewReady

⌈For each TDEventISignal, the reference to PhysicalChannel in the role physicalChannel shall exist⌋

Enumeration	**TDEventISignalTypeEnum**
Note	This is used to describe the specific event type of a TDEventISignal.
Aggregated by	TDEventISignal.tdEventType
Literal	***Description***
iSignalAvailableFor RTE	A point in time, where the COM module makes the contained signal / signal group available for the RTE and the corresponding Rx Indication callout is generated (if configured). **Tags:** atp.EnumerationLiteralIndex=0
iSignalSentToCOM	A point in time, where a transmission request call is issued by the RTE on a named COM signal / signal group and the new value is stored to the carrier COM I-PDU buffer. **Tags:** atp.EnumerationLiteralIndex=1

Table 2.32: TDEventISignalTypeEnum

2.3.2.3.2 TDEventIPdu

Class	**TDEventIPdu**			
Note	Describe timing events related to the exchange of IPdus between the bus specific (FlexRay / CAN / LIN) Interface BSW module and COM.			
Base	*ARObject*, *Identifiable*, *MultilanguageReferrable*, *Referrable*, *TDEventCom*, *TimingDescription*, *TimingDescriptionEvent*			
Aggregated by	*TimingExtension*.timingDescription			
Attribute	***Type***	***Mult.***	***Kind***	***Note***
iPdu	IPdu	0..1	ref	The scope of this timing event. **Tags:** atp.Splitkey=iPdu
physical Channel	PhysicalChannel	0..1	ref	The PhysicalChannel on which the IPdu is transmitted. **Tags:** atp.Splitkey=physicalChannel
tdEventType	TDEventIPduTypeEnum	0..1	attr	The specific type of this timing event.

Table 2.33: TDEventIPdu

[constr_6917] Affinity of IPdu in TDEventIPdu

Imposition time: IT_TimingViewReady

⌈The referenced IPdu in the role TDEventIPdu.iPdu shall exist also in the list of iPdus aggregated by TDEventIPdu.physicalChannel.pduTriggering⌋

[constr_6867] Multiplicity of TDEventIPdu.tdEventType

Imposition time: IT_TimingViewReady

⌈For each TDEventIPdu, the attribute tdEventType shall exist⌋

[constr_6868] Multiplicity of TDEventIPdu.iPdu

Imposition time: IT_TimingViewReady

⌈For each TDEventIPdu, the reference to IPdu in the role iPdu shall exist⌋

[constr_6869] Multiplicity of TDEventIPdu.physicalChannel

Imposition time: IT_TimingViewReady

⌈For each TDEventIPdu, the reference to PhysicalChannel in the role physical-Channel shall exist⌋

Enumeration	**TDEventIPduTypeEnum**
Note	This is used to describe the specific event type of a TDEventIPdu.
Aggregated by	TDEventIPdu.tdEventType
Literal	***Description***
iPduReceivedBy COM	A point in time where the received frame is processed by the corresponding (FlexRay / CAN / LIN) Interface BSW module, routed through the PDUR and the contained PDUs are pushed to the COM module. **Tags:** atp.EnumerationLiteralIndex=0
iPduSentToIf	A point in time where the carrier COM I-PDU is routed through the PDUR and is pushed to the bus specific (FlexRay / CAN / LIN) Interface BSW module. **Tags:** atp.EnumerationLiteralIndex=1

Table 2.34: TDEventIPduTypeEnum

2.3.2.3.3 TDEventFrame

Class	**TDEventFrame**			
Note	This is used to describe timing events related to the exchange of frames between the communication controller and the bus specific (FlexRay / CAN / LIN) Interface BSW module.			
Base	*ARObject*, *Identifiable*, *MultilanguageReferrable*, *Referrable*, *TDEventCom*, *TimingDescription*, *TimingDescriptionEvent*			
Aggregated by	*TimingExtension*.timingDescription			
Attribute	***Type***	***Mult.***	***Kind***	***Note***
frame	Frame	0..1	ref	The scope of this timing event. **Tags:** atp.Splitkey=frame
physical Channel	PhysicalChannel	0..1	ref	The PhysicalChannel on which the Frame is transmitted. **Tags:** atp.Splitkey=physicalChannel
tdEventType	TDEventFrameType Enum	0..1	attr	The specific type of this timing event.

Table 2.35: TDEventFrame

[constr_6916] Affinity of Frame in TDEventFrame

Imposition time: IT_TimingViewReady

⌈The referenced Frame in the role TDEventFrame.frame shall exist also in the list of frames aggregated by TDEventFrame.physicalChannel.frameTriggering⌋

[constr_6870] Multiplicity of `TDEventFrame.tdEventType`

Imposition time: `IT_TimingViewReady`

⌈For each `TDEventFrame`, the attribute `tdEventType` shall exist⌋

[constr_6871] Multiplicity of `TDEventFrame.frame`

Imposition time: `IT_TimingViewReady`

⌈For each `TDEventFrame`, the reference to `Frame` in the role `frame` shall exist⌋

[constr_6872] Multiplicity of `TDEventFrame.physicalChannel`

Imposition time: `IT_TimingViewReady`

⌈For each `TDEventFrame`, the reference to `PhysicalChannel` in the role `physicalChannel` shall exist⌋

Enumeration	**TDEventFrameTypeEnum**
Note	This is used to describe the specific event type of a TDEventFrame.
Aggregated by	TDEventFrame.tdEventType
Literal	***Description***
frameQueuedFor Transmission	A point in time where the frame containing the named signal / I-PDU is queued for transmission within the related Communication Driver. **Tags:** atp.EnumerationLiteralIndex=0
frameReceivedByIf	A point in time where the frame is pushed from the subscriber's communication controller to the corresponding (FlexRay / CAN / LIN) Interface BSW module. **Tags:** atp.EnumerationLiteralIndex=1
frameTransmitted OnBus	A point in time where the transmission of the frame completes successfully, and the subscriber's communication controller receives the frame from the bus. **Tags:** atp.EnumerationLiteralIndex=2

Table 2.36: TDEventFrameTypeEnum

2.3.2.3.4 TDEventComEthernet

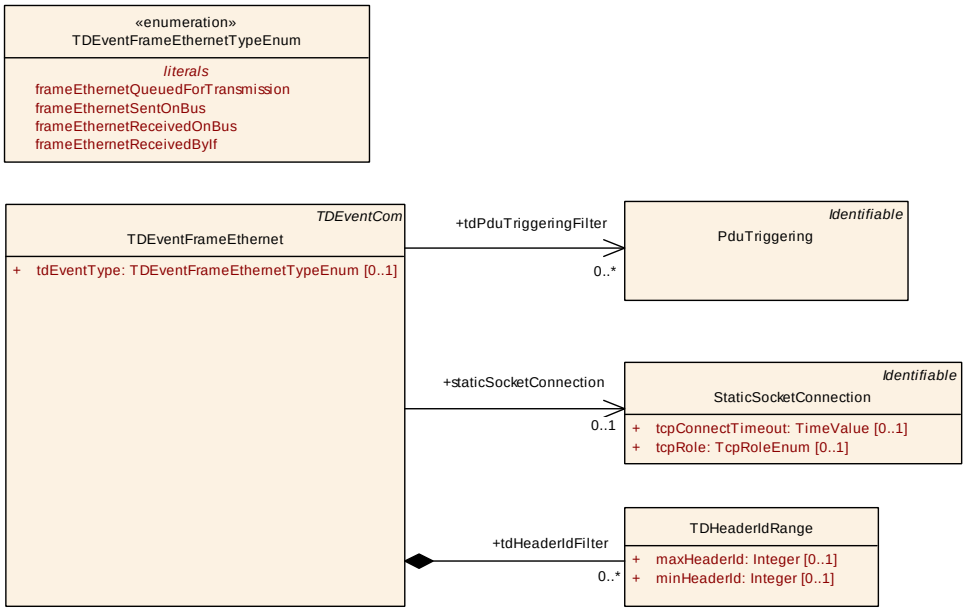

Figure 2.31: Events regarding Ethernet communication

Class	**TDEventFrameEthernet**			
Note	This is used to describe timing description events related to the exchange of Ethernet frames between an Ethernet communication controller and the BSW Ethernet interface and driver module.			
Base	*ARObject*, *Identifiable*, *MultilanguageReferrable*, *Referrable*, *TDEventCom*, *TimingDescription*, *TimingDescriptionEvent*			
Aggregated by	*TimingExtension*.timingDescription			
Attribute	***Type***	***Mult.***	***Kind***	***Note***
staticSocketConnection	StaticSocketConnection	0..1	ref	Specifies the SocketConnection by the means of which Physical Data Units (PDU) are transmitted or received within an Ethernet Frame. **Tags:** atp.Splitkey=staticSocketConnection
tdEventType	TDEventFrameEthernetTypeEnum	0..1	attr	This is used to describe the specific event type of a TDEventFrameEthernet.
tdHeaderIdFilter	TDHeaderIdRange	*	aggr	Specifies the header identifier or a range of header identifiers that if contained in the Ethernet frame let the TDEventFrameEthernet occur. **Tags:** atp.Splitkey=tdHeaderIdFilter
tdPduTriggeringFilter	PduTriggering	*	ref	Specifies the PDU that if contained in the Ethernet frame let the TDEventFrameEthernet occur. **Tags:** atp.Splitkey=tdPduTriggeringFilter

Table 2.37: TDEventFrameEthernet

[constr_6873] Multiplicity of `TDEventFrameEthernet.tdEventType`

Imposition time: `IT_TimingViewReady`

⌈For each `TDEventFrameEthernet`, the attribute `tdEventType` shall exist⌋

Enumeration	**TDEventFrameEthernetTypeEnum**
Note	This is used to describe the specific event type of a TDEventFrameEthernet.
Aggregated by	TDEventFrameEthernet.tdEventType
Literal	***Description***
frameEthernet QueuedFor Transmission	A point in time where the Ethernet frame containing the specified PDUs is queued for transmission within the corresponding Ethernet Communication Driver. **Tags:** atp.EnumerationLiteralIndex=0
frameEthernet ReceivedByIf	A point in time where the frame is pushed from the corresponding Ethernet communication controller to the BSW Ethernet communication interface. **Tags:** atp.EnumerationLiteralIndex=1
frameEthernet ReceivedOnBus	A point in time where the receipt of the Ethernet frame/packet completes successfully on the recipient's Ethernet communication controller. In other words, the Ethernet frame/packet has entered the recipient's Ethernet communication controller which means the last bit of the Ethernet frame/ packet has been received. **Tags:** atp.EnumerationLiteralIndex=2
frameEthernetSent OnBus	A point in time where the transmission of the Ethernet frame/packet completes successfully on the physical Ethernet communication network. In other words, the Ethernet frame/packet has left the sender's Ethernet communication controller, which means that the last bit of the Ethernet frame/ packet has been sent. **Tags:** atp.EnumerationLiteralIndex=3

Table 2.38: TDEventFrameEthernetTypeEnum

Class	**TDHeaderIdRange**			
Note	Specifies a range of PDU header identifiers. This range is specified by a minimum and maximum header identifier; and the maximum header identifier shall be greater than or equal the minimum header identifier.			
Base	*ARObject*			
Aggregated by	TDEventFrameEthernet.tdHeaderIdFilter			
Attribute	***Type***	***Mult.***	***Kind***	***Note***
maxHeaderId	Integer	0..1	attr	Specifies the maximum PDU header identifier, in other words the upper bound of a range of PDU header identifiers.
minHeaderId	Integer	0..1	attr	Specifies the minimum PDU header identifier, in other words the lower bound of a range of PDU header identifiers.

Table 2.39: TDHeaderIdRange

[constr_6874] Multiplicity of `TDHeaderIdRange.maxHeaderId`

Imposition time: `IT_TimingViewReady`

⌈For each `TDHeaderIdRange`, the attribute `maxHeaderId` shall exist⌋

[constr_6875] Multiplicity of `TDHeaderIdRange.minHeaderId`

Imposition time: `IT_TimingViewReady`

⌈For each `TDHeaderIdRange`, the attribute `minHeaderId` shall exist⌋

2.3.2.3.5 TDEventCycleStart

[constr_6876] Multiplicity of `TDEventCycleStart.cycleRepetition`

Imposition time: `IT_TimingViewReady`

⌈For each `TDEventCycleStart`, the attribute `cycleRepetition` shall exist⌋

Class	***TDEventCycleStart*** (abstract)			
Note	This is the abstract parent class to describe timing events related to a point in time where a communication cycle starts. Via the attribute "cycleRepetition", a filtered view to the cycle start can be defined.			
Base	*ARObject*, *Identifiable*, *MultilanguageReferrable*, *Referrable*, *TDEventCom*, *TimingDescription*, *TimingDescriptionEvent*			
Subclasses	TDEventFrClusterCycleStart			
Aggregated by	*TimingExtension*.timingDescription			
Attribute	***Type***	***Mult.***	***Kind***	***Note***
cycleRepetition	Integer	0..1	attr	The start of every <cycleRepetition> cycle is targeted by this event.

Table 2.40: TDEventCycleStart

2.3.2.3.5.1 TDEventFrClusterCycleStart

Class	**TDEventFrClusterCycleStart**			
Note	This is used to describe the timing event related to a point in time where a communication cycle starts on a FlexRay cluster.			
Base	*ARObject*, *Identifiable*, *MultilanguageReferrable*, *Referrable*, *TDEventCom*, *TDEventCycleStart*, *TimingDescription*, *TimingDescriptionEvent*			
Aggregated by	*TimingExtension*.timingDescription			
Attribute	***Type***	***Mult.***	***Kind***	***Note***
frCluster	FlexrayCluster	0..1	ref	The scope of this timing event. **Tags:** atp.Splitkey=frCluster

Table 2.41: TDEventFrClusterCycleStart

[constr_6877] Multiplicity of `TDEventFrClusterCycleStart.frCluster`

Imposition time: `IT_TimingViewReady`

⌈For each `TDEventFrClusterCycleStart`, the attribute `frCluster` shall exist⌋

2.3.2.4 `TDEventBswInternalBehavior`

The meta-class `TDEventBswInternalBehavior` is used to describe timing events related to the state changes on `BswModuleEntity`s - the possible states are given by `TDEventBswInternalBehavior.tdEventBswInternalBehaviorType`.

For every `TDEventBswInternalBehavior`, the scope is defined by `bswModuleEntity`. It refers to the `BswModuleEntity` for which the event can be observed.

This scope definition assumes that every BSW module exists only once on each ECU. Otherwise the scope would not be precise enough because every module instance would bring the same BSW module entities.

Events related to the BSW can be used during the specification of:

- BswModuleTiming 2.1.4.1
- EcuTiming 2.1.5

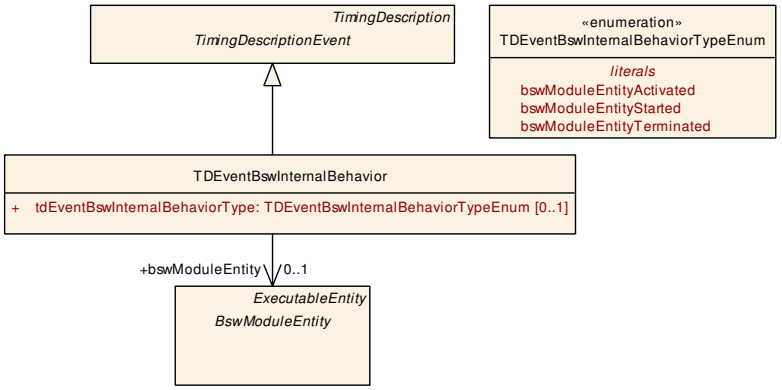

Figure 2.32: Events related to the internal structure of a BSW module

Class	**TDEventBswInternalBehavior**			
Note	This is used to describe timing events related to the BswInternalBehavior of a BSW module. This Class is only used by the AUTOSAR Classic Platform.			
Base	*ARObject*, *Identifiable*, *MultilanguageReferrable*, *Referrable*, *TimingDescription*, *TimingDescriptionEvent*			
Aggregated by	*TimingExtension*.timingDescription			
Attribute	***Type***	***Mult.***	***Kind***	***Note***
bswModule Entity	BswModuleEntity	0..1	ref	The scope of this timing event. **Tags:** atp.Splitkey=bswModuleEntity
tdEventBsw Internal BehaviorType	TDEventBswInternal BehaviorTypeEnum	0..1	attr	The specific type of this timing event.

Table 2.42: TDEventBswInternalBehavior

2.3.2.4.1 TDEventBswInternalBehaviorTypeEnum

This meta-class allows a finer control on the timing description events around the run-states of a BswModuleEntity. There is no formal modeling of the run-states of a BswModuleEntitys, so the possible run-states given in TDEventBswInternal-BehaviorTypeEnum relate to the run-states of the related OS task.

Enumeration	**TDEventBswInternalBehaviorTypeEnum**
Note	This is used to describe the specific event type of a TDEventBswInternalBehavior. This Enumeration is only used by the AUTOSAR Classic Platform.
Aggregated by	TDEventBswInternalBehavior.tdEventBswInternalBehaviorType
Literal	***Description***
bswModuleEntity Activated	A point in time where the associated BswModuleEntity has been activated, which means that it has entered the state "to be started". **Tags:** atp.EnumerationLiteralIndex=0
bswModuleEntity Started	A point in time where the associated BswModuleEntity has entered the state "started" after its activation. **Tags:** atp.EnumerationLiteralIndex=1
bswModuleEntity Terminated	A point in time where the associated BswModuleEntity has terminated and entered the state "suspended" **Tags:** atp.EnumerationLiteralIndex=2

Table 2.43: TDEventBswInternalBehaviorTypeEnum

[constr_6858] Multiplicity of `TDEventBswInternalBehavior.tdEventBswInternalBehaviorType`

Imposition time: `IT_TimingViewReady`

⌈The attribute `TDEventBswInternalBehavior.tdEventBswInternalBehaviorType` shall exist⌋

[constr_6859] Multiplicity of `TDEventBswInternalBehavior.bswModuleEntity`

Imposition time: `IT_TimingViewReady`

⌈The attribute `TDEventBswInternalBehavior.bswModuleEntity` shall exist⌋

2.3.2.5 TDEventBsw

The meta-class `TDEventBsw` is used to specify timing events events which are observable in the Basic Software Module view, which means that the occurrences of such events are observable between the Basic Software Modules.

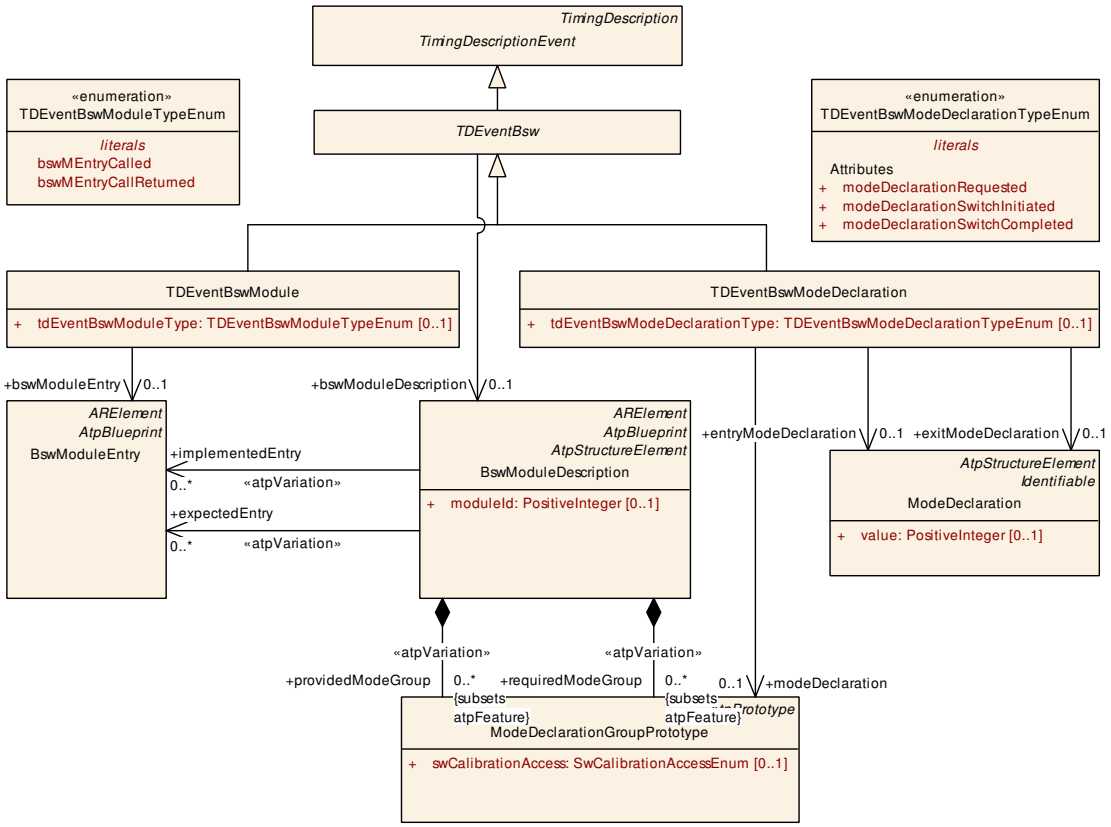

Figure 2.33: Events dealing with inter BSW module relations and mode communications on BSW level

[constr_6901] Multiplicity of `TDEventBsw.bswModuleDescription`

Imposition time: `IT_TimingViewReady`

⌈The attribute `TDEventBsw.bswModuleDescription` shall exist⌋

2.3.2.5.1 TDEventBswModule

The meta-class `TDEventBswModule` is used to specify timing events related to `BswModuleEntry`s, observable when such entries are called within the Basic Software.

Class	**TDEventBswModule**			
Note	This is used to describe timing events related to the interaction between BSW modules. This Class is only used by the AUTOSAR Classic Platform.			
Base	*ARObject*, *Identifiable*, *MultilanguageReferrable*, *Referrable*, *TDEventBsw*, *TimingDescription*, *TimingDescriptionEvent*			
Aggregated by	*TimingExtension*.timingDescription			
Attribute	***Type***	***Mult.***	***Kind***	***Note***
bswModuleEntry	BswModuleEntry	0..1	ref	The scope of this timing event. **Tags:** atp.Splitkey=bswModuleEntry
tdEventBswModuleType	TDEventBswModuleTypeEnum	0..1	attr	The specific type of this timing event.

Table 2.44: TDEventBswModule

[constr_6860] Multiplicity of `TDEventBswModule.tdEventBswModuleType`

Imposition time: `IT_TimingViewReady`

⌈The attribute `TDEventBswModule.tdEventBswModuleType` shall exist⌋

[constr_6861] Multiplicity of `TDEventBswModule.bswModuleEntry`

Imposition time: `IT_TimingViewReady`

⌈The reference `TDEventBswModule.bswModuleEntry` shall exist⌋

Enumeration	**TDEventBswModuleTypeEnum**
Note	This is used to describe the specific event type of a TDEventBswModule. This Enumeration is only used by the AUTOSAR Classic Platform.
Aggregated by	TDEventBswModule.tdEventBswModuleType
Literal	***Description***
bswMEntryCalled	A point in time where the associated BswModuleEntry has been called. **Tags:** atp.EnumerationLiteralIndex=0
bswMEntryCall Returned	A point in time where the call of the associated BswModuleEntry has returned. **Tags:** atp.EnumerationLiteralIndex=1

Table 2.45: TDEventBswModuleTypeEnum

2.3.2.5.2 TDEventBswModeDeclaration

The meta-class `TDEventBswModeDeclaration` is used to specify events that are observable when mode changes are initiated and propagated in the Basic Software.

Class	**TDEventBswModeDeclaration**			
Note	This is used to describe timing events related to the mode communication on BSW level. This Class is only used by the AUTOSAR Classic Platform.			
Base	*ARObject*, *Identifiable*, *MultilanguageReferrable*, *Referrable*, *TDEventBsw*, *TimingDescription*, *TimingDescriptionEvent*			
Aggregated by	*TimingExtension*.timingDescription			
Attribute	***Type***	***Mult.***	***Kind***	***Note***
entryMode Declaration	ModeDeclaration	0..1	ref	Optional parameter which refines the scope of the TDEventBswModeDeclaration. If the parameter is set, the event occurs only if the mode declaration group prototype instance shall enter into the referenced ModeDeclaration. **Tags:** atp.Splitkey=entryModeDeclaration
exitMode Declaration	ModeDeclaration	0..1	ref	Optional parameter which refines the scope of the TDEventBswModeDeclaration. If the parameter is set, the event occurs only if the mode declaration group prototype instance shall exit from the referenced ModeDeclaration. **Tags:** atp.Splitkey=exitModeDeclaration
mode Declaration	ModeDeclarationGroup Prototype	0..1	ref	The scope of this timing event. **Tags:** atp.Splitkey=modeDeclaration

▽

△

Class	**TDEventBswModeDeclaration**			
tdEventBsw Mode DeclarationType	TDEventBswMode DeclarationTypeEnum	0..1	attr	The specific type of this timing event.

Table 2.46: TDEventBswModeDeclaration

Enumeration	**TDEventBswModeDeclarationTypeEnum**
Note	This is used to describe the specific event type of a TDEventBswModeDeclaration. This Enumeration is only used by the AUTOSAR Classic Platform.
Aggregated by	TDEventBswModeDeclaration.tdEventBswModeDeclarationType
Literal	***Description***
modeDeclaration Requested	A point in time where the associated ModeDeclarationGroupPrototype has been requested. **Tags:** atp.EnumerationLiteralIndex=0
modeDeclaration SwitchCompleted	A point in time where the switch to the associated ModeDeclarationGroupPrototype has been completed. **Tags:** atp.EnumerationLiteralIndex=1
modeDeclaration SwitchInitiated	A point in time where the switch to the associated ModeDeclarationGroupPrototype has been initiated by the BswM. **Tags:** atp.EnumerationLiteralIndex=2

Table 2.47: TDEventBswModeDeclarationTypeEnum

[constr_6862] Multiplicity of `TDEventBswModeDeclaration.tdEventBswModeDeclarationType`

Imposition time: `IT_TimingViewReady`

⌈The reference `tdEventBswModeDeclarationType` shall exist⌋

[constr_6863] Multiplicity of `TDEventBswModeDeclaration.modeDeclaration`

Imposition time: `IT_TimingViewReady`

⌈The reference `TDEventBswModeDeclaration.modeDeclaration` shall exist⌋

2.3.2.6 TDEventComplex

In contrast to the other timing events, `TDEventComplex` does not contain information about the context it references e.g. `TDEventVariableDataPrototype.dataElement`. Instead `TDEventComplex` uses an ANTLR based expression grammar to specify a formula-like expression to enable complex descriptions of the occurrence and context of `TimingDescriptionEvent`s. There are no further attributes for `TDEventComplex` as everything is defined in the context of the `TDEventOccurrenceExpression`.

Complex timing events can be used during the specification of:

- `VfbTiming` 2.1.1
- `SystemTiming` 2.1.3

- SwcTiming 2.1.2
- BswModuleTiming 2.1.4.1
- EcuTiming 2.1.5

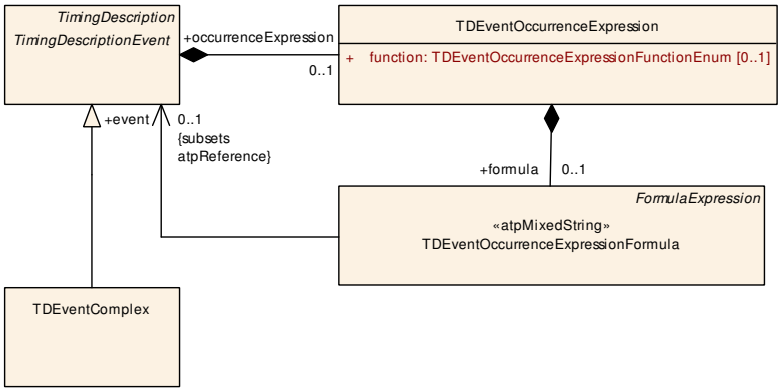

Figure 2.34: Modeling of TDEventComplex

Class	**TDEventComplex**			
Note	This is used to describe complex timing events. The context of a complex timing event either is described informally, e.g. using the documentation block, or is described formally by the associated TDEventOccurrenceExpression.			
Base	*ARObject*, *Identifiable*, *MultilanguageReferrable*, *Referrable*, *TimingDescription*, *TimingDescriptionEvent*			
Aggregated by	*TimingExtension*.timingDescription			
Attribute	***Type***	***Mult.***	***Kind***	***Note***
–	–	–	–	–

Table 2.48: TDEventComplex

2.3.2.7 TDEventOccurrenceExpression

TimingDescriptionEvents allow to specify observable events with a well-defined context. However, sometimes the context information of the events is not sufficient, because additional conditions, like a value filter or additional stimuli, influence the occurrence. A TDEventOccurrenceExpression provides means to place more complex conditions on the occurrence of atomic events.

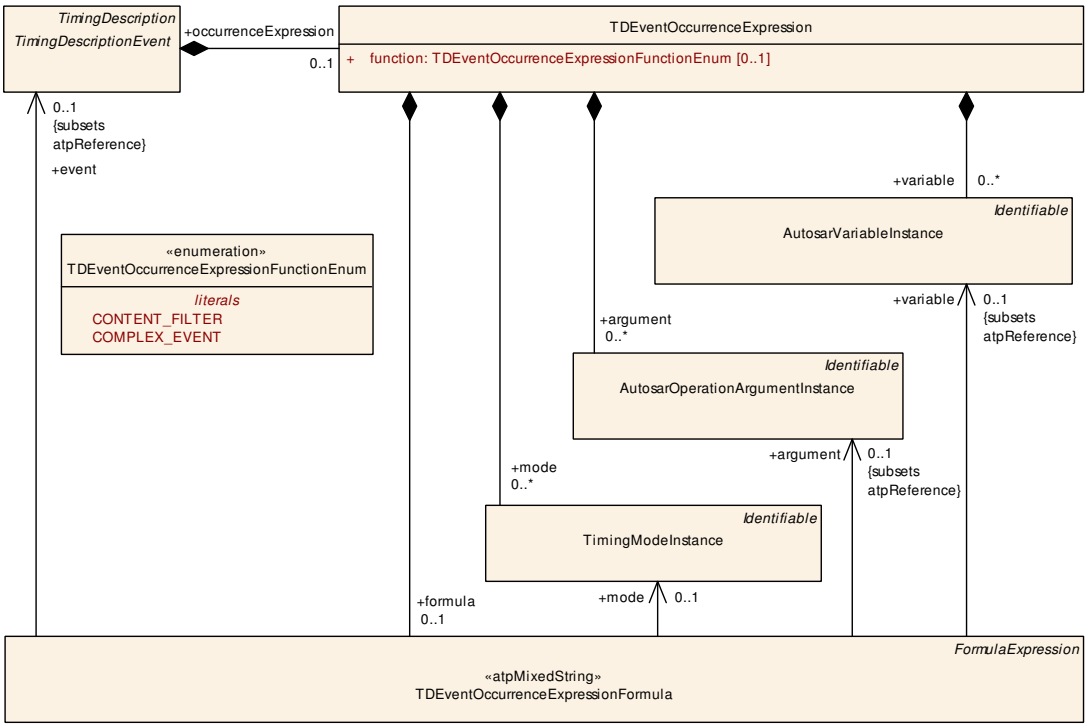

Figure 2.35: TDEventOccurrenceExpression

Class	**TDEventOccurrenceExpression**			
Note	This is used to specify a filter on the occurrences of `TimingDescriptionEvent`s by means of a `TDEventOccurrenceExpressionFormula`. Filter criteria can be `variable` and `argument` values, i.e. the timing event only occurs for specific values, as well as the temporal characteristics of the occurrences of arbitrary timing events.			
Base	*ARObject*			
Aggregated by	*TimingDescriptionEvent*.occurrenceExpression			
Attribute	***Type***	***Mult.***	***Kind***	***Note***
argument	AutosarOperation ArgumentInstance	*	aggr	An occurrence expression can reference an arbitrary number of `ArgumentDataPrototype`s in its expression. This association aggregates instance references to `OperationArgumentPrototype`s which can be referenced in the expression. **Tags:** atp.Splitkey=argument, argument.shortName
formula	TDEventOccurrence ExpressionFormula	0..1	aggr	This is the expression formula which is used to describe the occurrence expression. **Tags:** atp.Splitkey=formula
function	TDEventOccurrence ExpressionFunction Enum	0..1	attr	As per `TDEventOccurrenceExpressionFunctionEnum`
mode	TimingModeInstance	*	aggr	An occurrence expression can reference an arbitrary number of TimingModeInstances in its expression. This association aggregates instance references to Mode Declaration which can be referenced in the expression. **Tags:** atp.Splitkey=mode, mode.shortName

△

Class	**TDEventOccurrenceExpression**			
variable	AutosarVariable Instance	*	aggr	An occurrence expression can reference an arbitrary number of VariableDataPrototypes in its expression. This association aggregates instance references to VariableDataPrototypes which can be referenced in the expression. **Tags:** atp.Splitkey=variable, variable.shortName

Table 2.49: TDEventOccurrenceExpression

Enumeration	**TDEventOccurrenceExpressionFunctionEnum**
Note	Defines the precise function of the expression, see also [TPS_TIMEX_00136] for the function usages.
Aggregated by	TDEventOccurrenceExpression.function
Literal	***Description***
COMPLEX_EVENT	Combines any number of atomic and complex events to specify a new TimingDescriptionEvent **Tags:** atp.EnumerationLiteralIndex=1
CONTENT_FILTER	Filters occurrences of an atomic event based on the value of exchanged data or operation arguments **Tags:** atp.EnumerationLiteralIndex=0

Table 2.50: TDEventOccurrenceExpressionFunctionEnum

Depending on the function of a TDEventOccurrenceExpression, the overall role of the occurrence expression shall differ:

[TPS_TIMEX_00136] Standardized function of TDEventOccurrenceExpression ⌈The following functions of TDEventOccurrenceExpression and their semantics are reserved:

- CONTENT_FILTER: filters occurrences of an atomic event based on the value of exchanged data or operation arguments
- COMPLEX_EVENT: combines any number of atomic and complex events to specify a new TimingDescriptionEvent

⌋

2.3.2.7.1 TDEventOccurrenceExpressionFormula

The "brain" of the TDEventOccurrenceExpression is the TDEventOccurrenceExpressionFormula. It is based on the syntax of the formula language in [9, FO_TPS_GenericStructureTemplate] 4.9 *"Formula Language"*. It is necessary to understand *those* FormulaExpression chapters before understanding the extensions [TPS_GST_00293] in TDEventOccurrenceExpressionFormula.

It inherits from FormulaExpression and extends the language by additional ExtUnaryFuncName functions. FormulaExpression is itself an AUTOSAR defined Domain Specific language (DSL) based on ANTLR, that allows using mathematical functions and operators to build expressions which can be fed with contextual data (in this case timing events) to yield a numerical return value.

Some fundamentals of the TDEventOccurrenceExpressionFormula are:

- The TDEventOccurrenceExpressionFormula is specified such that it describes an *event* rather than a state. As a consequence the TDEventOccurrenceExpressionFormula shall ensure that a complex TimingDescriptionEvent *could* only occur at the occurrence time of one of the referenced TimingDescriptionEvents.
- The starting point of the time interval considered by the TIMEX functions is the point in time the measurement of the event occurrences have triggered.
- ExtUnaryFuncNames: With the specialization of FormulaExpression ([TPS_GST_00293]) several ExtUnaryFuncNames are added which further depend on the TDEventOccurrenceExpression.function, explained further in 2.3.2.7.5 and 2.3.2.7.4.
- ≪atpMixedString≫: The TDEventOccurrenceExpressionFormula is decorated with the ≪atpMixedString≫ stereotype, thus several references ([TPS_GST_00015]) can be used within the TDEventOccurrenceExpressionFormula.
- ExtUnaryFuncName: each ExtUnaryFuncName has a defined Return Type,
- operands: each ExtUnaryFuncName required by the functions are references to model elements. TDEventOccurrenceExpressionFormula requires references to the respective elements of type TimingDescriptionEvent, AutosarVariableInstance, AutosarOperationArgumentInstance, and TimingModeInstance.
- Since the contained formula grammar is an external DSL, it is not directly part of [10, MMOD_XMLSchema], therefore model constraints can not be formally expressed against it.

Class	«atpMixedString» **TDEventOccurrenceExpressionFormula**			
Note	Provides the means to express the temporal characteristics of timing event occurrences in correlation with specific variable and argument values. The formal definition of the extended functions (ExtUnaryFunctions) are described in TIMEX			
Base	*ARObject*, *FormulaExpression*			
Aggregated by	TDEventOccurrenceExpression.formula			
Attribute	***Type***	***Mult.***	***Kind***	***Note***
argument	AutosarOperationArgumentInstance	0..1	ref	This is one particular argument value used in the expression formula.
event	TimingDescriptionEvent	0..1	ref	This is one particular TimingDescriptionEvent used in the expression formula.
mode	TimingModeInstance	0..1	ref	This is one particular mode used in the expression formula.
variable	AutosarVariableInstance	0..1	ref	This is one particular variable value used in the expression formula.

Table 2.51: TDEventOccurrenceExpressionFormula

[TPS_TIMEX_00137] `DataPrototype` in a `TDEventOccurrenceExpression.variable` ⌈The referenced `DataPrototype` instance in `TDEventOccurrenceExpression.variable.variableInstance` shall be a `VariableDataPrototype` which resolves to `Integral Primitive Type` [6, TPS_SoftwareComponentTemplate] which satisfies either:

- [constr_1230] - if the `AutosarDataType` is an `ApplicationDataType`
- [constr_1229] - if the `AutosarDataType` is an `ImplementationDataType`

⌋

[TPS_TIMEX_00138] `DataPrototype` in a `TDEventOccurrenceExpression.argument` ⌈The referenced `DataPrototype` instance in `TDEventOccurrenceExpression.argument.operationArgumentInstance` shall be a `ArgumentDataPrototype` which resolves to an `Integral Primitive Type` [6, TPS_SoftwareComponentTemplate] which satisfies either:

- [constr_1230] - if the `AutosarDataType` is an `ApplicationDataType`
- [constr_1229] - if the `AutosarDataType` is an `ImplementationDataType`

⌋

[constr_6924] Multiplicity of `TDEventOccurrenceExpression.function`

Imposition time: `IT_TimingDescriptionReady`

⌈The attribute `TDEventOccurrenceExpression.function` shall exist⌋

[constr_6879] Multiplicity of `TDEventOccurrenceExpression.formula`

Imposition time: `IT_TimingDescriptionReady`

⌈The aggregation `TDEventOccurrenceExpression.formula` shall exist⌋

2.3.2.7.2 TDEventOccurrenceExpressionVariable

When used in an occurance expression, the value of the referenced variable is evaluated at the point in time the atomic event occurs.

Class	**AutosarVariableInstance**			
Note	Represents a reference to a variable instance. The target of the variable instance can be either: • a variable provided via a `PortPrototype` • an element inside of a composite variable (e.g. struct) provided via a `PortPrototype`			
Base	*ARObject*, *Identifiable*, *MultilanguageReferrable*, *Referrable*			
Aggregated by	TDEventOccurrenceExpression.variable, TimingExtensionResource.timingVariable			
Attribute	***Type***	***Mult.***	***Kind***	***Note***

▽

△

Class	**AutosarVariableInstance**			
variableInstance	DataPrototype	0..1	iref	This is the reference to the instanceRef definition. **Tags:** atp.Splitkey=variableInstance, variableInstance.contextComponent, variableInstance.contextPortPrototype, variableInstance.rootVariableDataPrototype, variableInstance.contextDataPrototype, variableInstance.targetDataProtoype **InstanceRef implemented by:** VariableInComponentInstanceRef

Table 2.52: AutosarVariableInstance

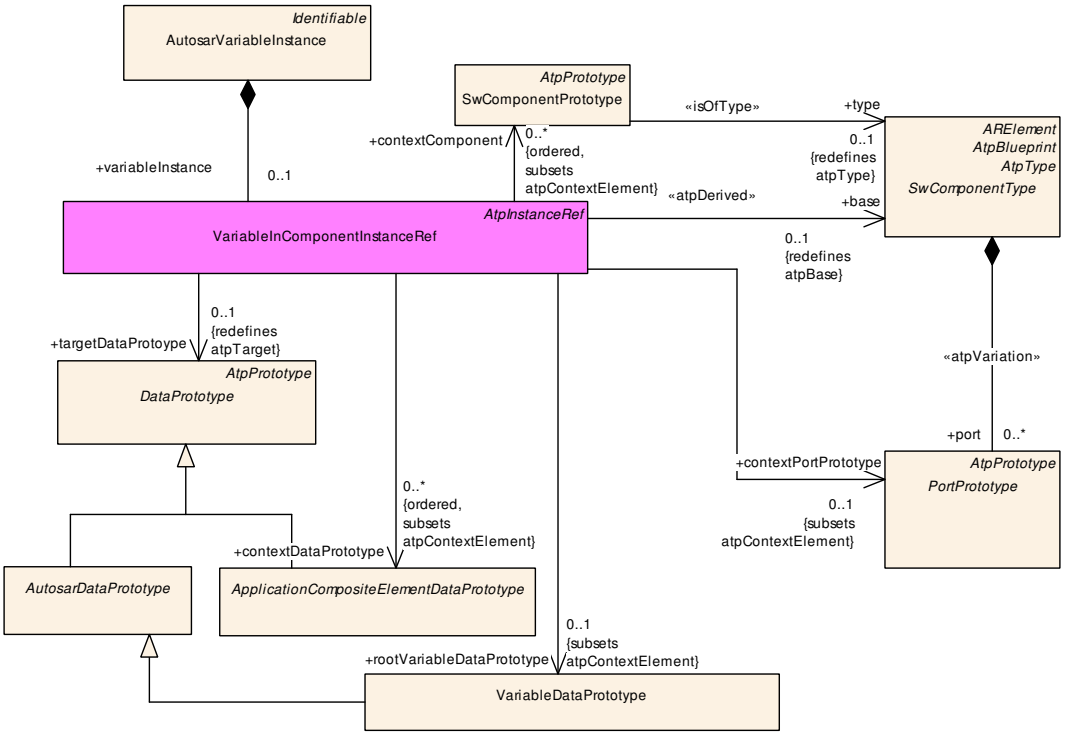

Figure 2.36: Instance reference to a variable data prototype

[constr_6880] Multiplicity of `AutosarVariableInstance.variableInstance`

Imposition time: `IT_TimingDescriptionReady`

⌈The instance reference `AutosarVariableInstance.variableInstance` shall exist⌋

2.3.2.7.3 TDEventOccurrenceExpressionArgument

When used in an occurance expression, the value of the referenced argument is evaluated at the point in time the atomic event occurs.

Class	**AutosarOperationArgumentInstance**			
Note	This class represents a reference to an argument instance. This way it is possible to reference an argument instance in the occurrence expression formula. The argument instance can target to one of the following arguments: • a whole argument used in an operation of a `PortPrototype` typed by a `ClientServerInterface` • an element inside of a composite argument used in an operation of a `PortPrototype` typed by a `ClientServerInterface`			
Base	*ARObject*, *Identifiable*, *MultilanguageReferrable*, *Referrable*			
Aggregated by	TDEventOccurrenceExpression.argument, TimingExtensionResource.timingArgument			
Attribute	***Type***	***Mult.***	***Kind***	***Note***
operation Argument Instance	DataPrototype	0..1	iref	This is the reference to the instanceRef definition. **Tags:** atp.Splitkey=operationArgumentInstance, operationArgumentInstance.base, operationArgument Instance.contextComponent, operationArgument Instance.contextPortPrototype, operationArgument Instance.contextOperation, operationArgument Instance.rootArgumentDataPrototype, operationArgument Instance.contextDataPrototype, operationArgument Instance.targetDataPrototype **InstanceRef implemented by:** OperationArgumentIn ComponentInstanceRef

Table 2.53: AutosarOperationArgumentInstance

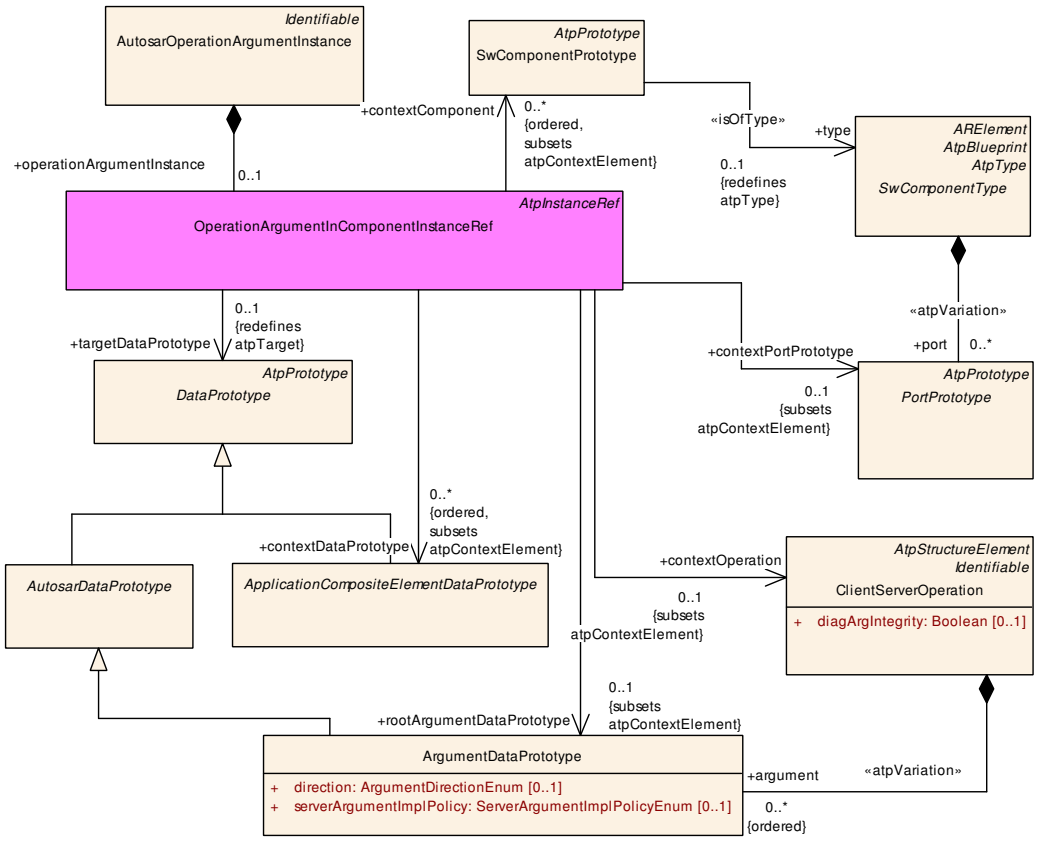

Figure 2.37: Instance referencing to an operation argument

[constr_6881] Multiplicity of AutosarOperationArgumentInstance.operationArgumentInstance

Imposition time: IT_TimingDescriptionReady

⌈The instance reference AutosarOperationArgumentInstance.operationArgumentInstance shall exist⌋

2.3.2.7.4 TDEventOccurrenceExpression.function==CONTENT_FILTER

With a TDEventOccurrenceExpression.function==CONTENT_FILTER, on each occurrence of the atomic event the interpreter checks whether the content filter defined by the expression is fulfilled.

[TPS_TIMEX_00131] Formula expression functions relevant for CONTENT_FILTER ⌈The following formula expression functions are relevant ONLY in a TDEventOccurrenceExpression.function==CONTENT_FILTER:

- TIMEX_value(reference(<argument-or-variable>))
- operand <argument-or-variable>: an AutosarVariableInstance or AutosarOperationArgumentInstance
- returns: Numerical
- example:

```
TIMEX_value( reference( "AUTOSAR-VARIABLE-INSTANCE:/Example/Expression/ECX/avi_DE3" ) )
```

⌋

[TPS_TIMEX_00132] AutosarVariableInstance for CONTENT_FILTER ⌈If a content filter is defined for an atomic event, then references to AutosarVariableInstances are only allowed if the atomic event is of type TDEventVariableDataPrototype.⌋

Only if such an atomic event occurs, the value of the variables can be evaluated. Thus, also the scope of the atomic event shall be the same as the AutosarVariableInstance, meaning that they shall point to the same VariableDataPrototype.

[TPS_TIMEX_00133] AutosarOperationArgumentInstance for CONTENT_FILTER ⌈If a content filter is defined for an atomic event then references to AutosarOperationArgumentInstances are only allowed if the atomic event is of type TDEventOperation.⌋

Only if such an atomic event occurs, the value of the operation arguments can be evaluated. Thus, also the scope of the atomic event shall be the same as the AutosarOperationArgumentInstance, meaning that they shall point to the same ClientServerOperation

[TPS_TIMEX_00134] `AutosarVariableInstance` for `CONTENT_FILTER` ⌈If a content filter is defined for an atomic event then references to `AutosarOperationArgumentInstance`s with argument direction "out" are only allowed, if the atomic event of type `TDEventOperation` refers either to the point in time when the operation call response has been sent (`TDEventOperationTypeEnum`=`operationCallResponseSent`) or to the point in time when the operation call response has been received (`TDEventOperationTypeEnum`=`operationCallResponseReceived`).⌋

2.3.2.7.5 `TDEventOccurrenceExpression.function==COMPLEX_EVENT`

In this case, the occurrence expression is defined for a complex event. All features of the occurrence expression language can be used for this expression type. At a specific point in time *t*, the interpreter evaluates the expression to determine if the complex event has occurred.

[TPS_TIMEX_00135] Formula expression functions relevant for `COMPLEX_EVENT` ⌈The following formula expression functions are relevant ONLY in a `TDEventOccurrenceExpression.function==COMPLEX_EVENT`:

- `TIMEX_occurs`(reference(<argument-or-variable>))
  - operand <argument-or-variable>: an `AutosarVariableInstance` or `AutosarOperationArgumentInstance`
  - returns: `Numerical`
- `TIMEX_hasOccurred`(reference(<tdevent>))
  - operand <tdevent>: reference to a `TimingDescriptionEvent` whose occurrence shall be evaluated
  - returns: `Boolean` (TRUE if the referenced `TimingDescriptionEvent` has occurred *at least once* before or at the same point in time the expression is evaluated, otherwise FALSE)
- `TIMEX_timeSinceLastOccurrence`(reference(<tdevent>))
  - operand <tdevent>: reference to a `TimingDescriptionEvent` whose occurrence shall be evaluated
  - returns: `Float` and the unit is seconds. It returns the time difference between the point in time of the last occurrence of the referenced event and the point in time the expression is evaluated
- `TIMEX_angleSinceLastOccurrence`(reference(<tdevent>))
  - operand <tdevent>: reference to a `TimingDescriptionEvent` whose occurrence shall be evaluated

  - returns: `Float` and the unit is degree. It returns the angle of the crank shaft between the point in time of the last occurrence of the referenced event and the point in time the expression is evaluated

- `TIMEX_modeActive`(reference(<timing-mode>))
  - operand <timing-mode>: reference to a `TimingModeInstance` whose occurrence shall be evaluated
  - returns: `Boolean` (TRUE if the specified mode declaration is *active* at the point in time the expression is evaluated, otherwise FALSE)

⌋

Considering the occurrence expression defined for the example given in Section 2.3.2.7.5.1, the interpreter "implements" a function *ECX(t)* which returns TRUE, if the complex event ECX occurs at time *t*:

```
ECX(t) =
( TIMEX_occurs( t, /Example/Expression/E1 )
   || TIMEX_occurs( t, /Example/Expression/E2 ) )
&& TIMEX_value( t, /Example/Expression/ECX/avi_DE3 ) > 3
&& abs( TIMEX_timeSinceLastOccurrence( t, /Example/Expression/E1 ) -
   TIMEX_timeSinceLastOccurrence( t, /Example/Expression/E2 ) ) <= 0.0005
```

The expression shall only be evaluated at occurrence times of *E1* or *E2*, because only then the complex event *ECX* can occur and the expression can return TRUE.

As shown in the sketched trace in Figure 2.38 the timing description events called *E1* and *E2* occur at different times. On the left hand side of this figure the two events occur within a time interval of 0.0005 seconds. The point in time the given occurrence expression is evaluated is the point in time the event *E2* occurs. The result of the occurrence expression at this point in time, $t_{evaluate}$ respectively t_{E2}, is TRUE. On the right hand side of this figure the two events do not occur within a time interval of 0.0005 seconds. The point in time the given occurrence expression is evaluated is the point in time the event *E1* occurs. The result of the occurrence expression at this point in time, $t_{evaluate}$ respectively t_{E1}, is FALSE.

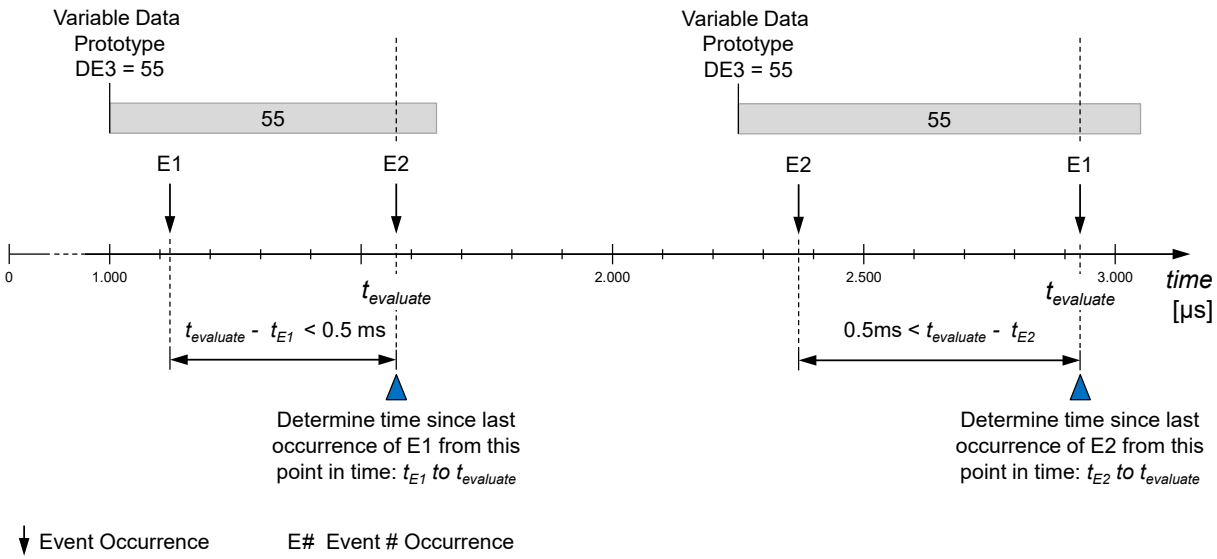

Figure 2.38: Trace showing various occurrences of the timing description events *E1* and *E2*, as well as the value of the variable *DE3*.

Based on the several functions provided by the occurrence expression language, the interpreter requires the following information from the system:

- the value of a referenced `AutosarOperationArgumentInstance` at time *t*.
- the value of a referenced `AutosarVariableInstance` at time *t*.
- the occurrences of a referenced `TimingDescriptionEvent` at time *t* and before.

There are different ways to gather the required information:

- Model analysis and simulation: In a deterministic system environment, occurrences of `TimingDescriptionEvent`s can be determined offline, for example the point in time a frame will be transmitted in the static segment of a FlexRay network.
- Target trace: The required information can be gathered from a running system by recording the points in time a `TimingDescriptionEvent` has occurred. For example, an ECU trace for `TDEventSwcInternalBehavior` may contain a marker for each point in time a `RunnableEntity` is activated, started or terminated.

If the interpreter has the required information as input, the different functions provided by the occurrence expression language can be interpreted as follows:

- TIMEX_value(t, <reference to an `AutosarVariableInstance`>) returns the variable value at time *t*.
- TIMEX_value(t, <reference to an `AutosarOperationArgumentInstance`>) returns the operation argument value at time *t*.

- TIMEX_occurs(t, <reference to a TimingDescriptionEvent>) returns TRUE (or 1) if the referenced event has occurred at time *t*, else it returns FALSE (or 0).
- TIMEX_hasOccurred(t, <reference to a TimingDescriptionEvent>) returns TRUE (or 1) if the referenced event has occurred *at least once* before or at time *t*.
- TIMEX_timeSinceLastOccurrence(t, <reference to a TimingDescriptionEvent>) returns the time difference between *t* and the point in time of the last occurrence of the referenced event. The unit of time is seconds.
- TIMEX_angleSinceLastOccurrence(t, <reference to a TimingDescriptionEvent>) returns the angle difference between *t* and the point in time of the last occurrence of the referenced event. The unit of angle is degree.
- TIMEX_modeActive(t, <reference to a TimingModeInstance>) returns TRUE (or 1) if the referenced mode is active at time *t*, else it returns FALSE (or 0).

2.3.2.7.5.1 Example

The example given in this chapter shows how to combine the formula functions in order to specify a TDEventOccurrenceExpressionFormula for a complex event called *ECX*. This complex event expresses that the two dataElements *DE1* and *DE2* are becoming available at the required port *RequiredPort* of *Swc1* within an interval of maximum 0.5 ms *and* that the value of the dataElement *DE3* is larger than three (3) at this point in time.

Figure 2.39 sketches the AUTOSAR software component model of this example.

An SWC *Swc1* has a RPortPrototype called *RequiredPort*, and a PPortPrototype called *ProvidedPort*. Both ports are typed by a SenderReceiverInterface called *SenderReceiverInterface1*, and consist of three dataElements: *DE1*, *DE2* and *DE3*[1].

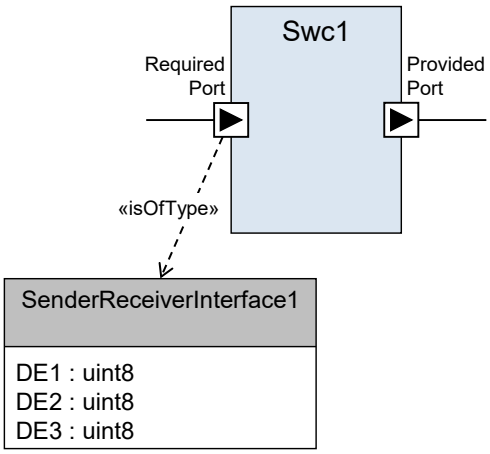

Figure 2.39: The SWC used by the Occurrence Expression Example

[1] one could also instead define three discrete RPortPrototypes typed by a SenderReceiverInterface, each with a single dataElement

The corresponding timing model for the given example is shown in listing C.14. Since the timing is described for a software component in the Virtual Functional Bus view, the `VfbTiming` is used for specifying the corresponding timing model, namely the Virtual Functional Bus Timing View. This timing model shall only contain timing description events related to the Virtual Functional Bus as described in section 2.3.2.1.

The complex event *ECX* occurs when the following conditions are fulfilled:

Condition1 Either atomic timing event *E1* or *E2* shall occur. In this example, *E1* and *E2* are atomic timing events `TDEventVariableDataPrototype` which occur when the `VariableDataPrototype`s called *DE1* and *DE2* are received on `PortPrototype` called *Required Port* of the component called *Swc1*.

Condition2 The value of the `VariableDataPrototype` called *DE3* shall be greater than 3.

Condition3 The `VariableDataPrototype`s called *DE1* and *DE2* shall become available at the *required* `PortPrototype` called *RequiredPort* within a time interval of maximum 0.5 milliseconds.

The complex event *ECX* would be described by the occurrence expression in C.5.1

Due to the first condition the complex event *ECX* can only occur when one of the atomic timing events *E1* or *E2* occurs at the point in time of evaluation and thus satisfies the principle that the occurence expresses the semantics of an event and not a state.

Figure 2.38 shows a measurement of the event occurrences.

2.3.2.8 Time Base Referencing for Timing Description Events

In certain use-cases, a `TimingDescriptionEvent` may reference an optional `TimingDescriptionEvent.clockReference` to provide a relation to an *actual* time base, this concept is explained in section 3.2.

2.4 TimingConstraint

TIMEX `TimingConstraint`s may be used two fold:

1. as a restriction for the timing behavior of the system (e.g. minimum (maximum) latency bound for a certain event sequence). In this case, a timing constraint is a functional requirement which the system shall fulfill as a basis for testing.
2. as a guarantee for the timing behavior of the system. In this case, the system developer guarantees that the system has a certain behavior with respect to timing (e.g. a timing event is guaranteed to occur periodically with a certain maximum variation). For example, in the context of a performance specification.

The application of TimingConstraints are contextual and are applied to constrain TimingDescriptionEvents, TimingDescriptionEventChains or ExecutableEntitys.

2.4.1 TimingConstraints on TimingDescriptionEvents

A TimingDescriptionEvent is used to describe that in a system, specific events occur and also at which locations in this system the occurrences are observed. Generally a TimingConstraint, when applied to TimingDescriptionEvent, imposes a restriction/expectation on the occurrences of an event in a given scope/context with a temporal restriction.

An EventTriggeringConstraint specifies the way an event occurs in the temporal space. TIMEX provides means to specify periodic (PeriodicEventTriggering) and sporadic (SporadicEventTriggering) occurrences, as well as event occurrences that follow a specific pattern (BurstPatternEventTriggering, ConcretePatternEventTriggering, and ArbitraryEventTriggering pattern).

In 2.40 the differing sub-classes of TimingConstraints on TimingDescriptionEvents are shown.

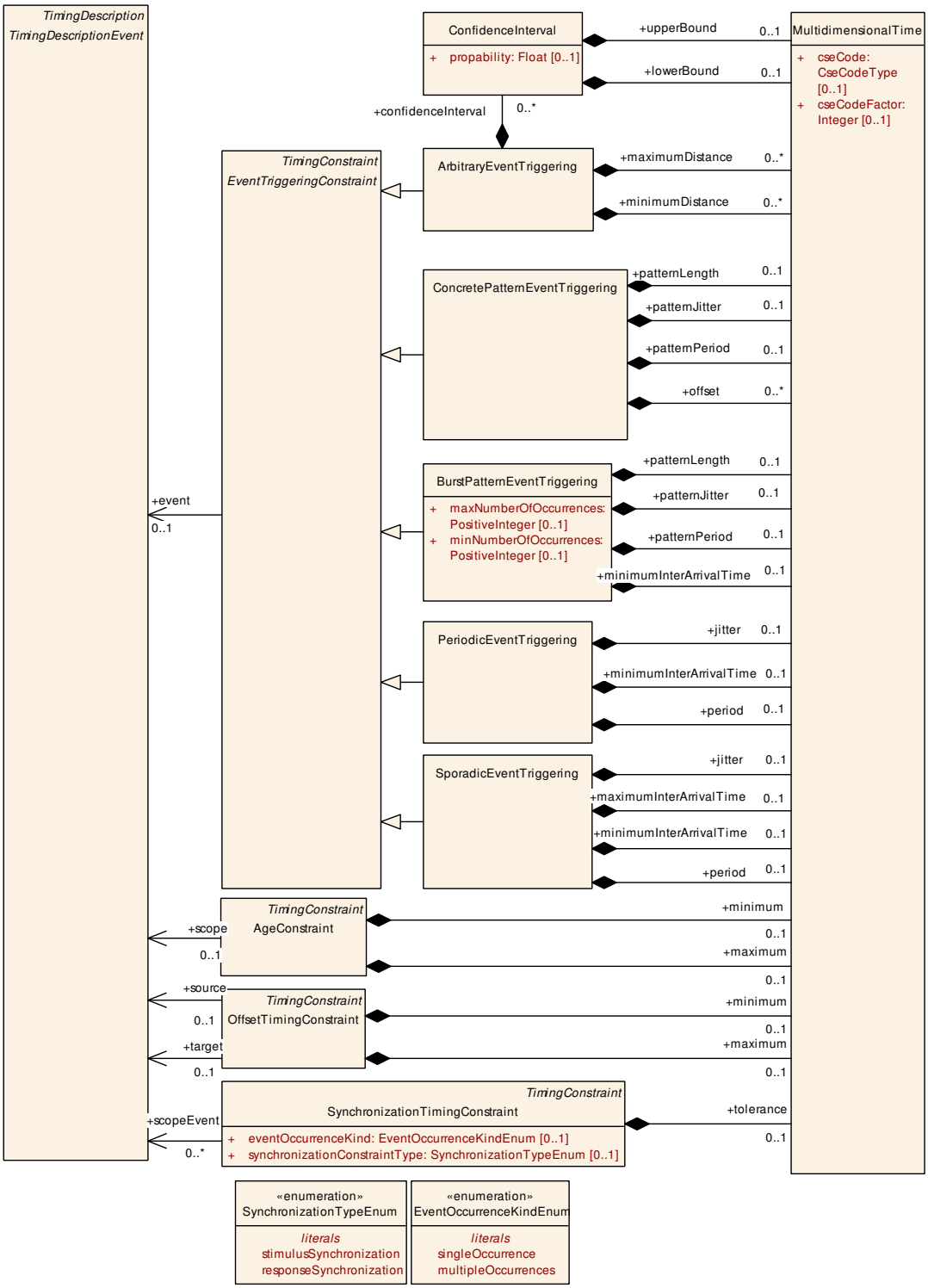

Figure 2.40: `TimingConstraint`s on `TimingDescriptionEvent`s

2.4.1.1 SynchronizationTimingConstraint

In some cases the complete event chains are not entirely known, or not available in the scope of the model, at the point in time the timing constraint shall be specified. For this

purpose, TIMEX allows the specification of synchronization constraints on events. In this case, the events referenced by the constraint are related implicitly, because they have a common stimulus (in case of constraint type `responseSynchronization`) or a common response (in case of constraint type `stimulusSynchronization`) not known yet, or not available in the scope of the model.

At a later stage during the development, when the refined software architecture exposes the complete event chains (e.g. because the common stimulus gets known), the respective event chains shall be specified and associated with a `SynchronizationTimingConstraint` on event chains (see 2.4.2.1) in order to refine the previously defined `SynchronizationTimingConstraint` on events.

The parameters are shown in use in Figure 2.41.

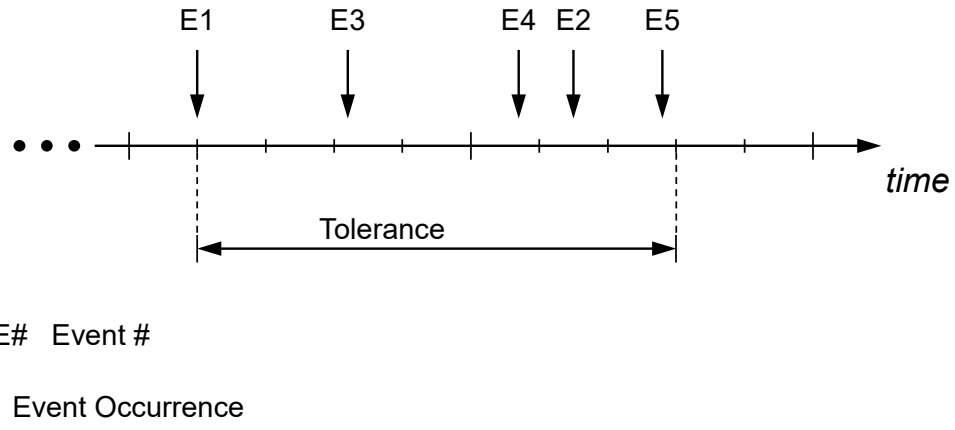

Figure 2.41: Parameter characterizing the Synchronization Constraint

[constr_4513] `SynchronizationTimingConstraint` shall reference at least two events

Imposition time: `IT_TimingDescriptionReady`

⌈In the case, that the `SynchronizationTimingConstraint` is imposed on events then at least two (2) timing description events shall be referenced.⌋

[constr_6846] Multiplicity of `SynchronizationTimingConstraint.synchronizationConstraintType`

Imposition time: `IT_TimingDescriptionReady`

⌈For each `SynchronizationTimingConstraint`, the attribute `synchronizationConstraintType` shall exist⌋

[constr_6847] Multiplicity of `SynchronizationTimingConstraint.tolerance`

Imposition time: `IT_TimingDescriptionReady`

⌈For each `SynchronizationTimingConstraint`, the attribute `tolerance` shall exist⌋

2.4.1.2 EventTriggeringConstraint

The EventTriggeringConstraint is an abstract base class representing a number sub-classes of concrete types (patterns) of event reporting. Regardless of the concrete meta-class, the EventTriggeringConstraint needs an event as its scope.

Class	***EventTriggeringConstraint*** (abstract)			
Note	Describes the occurrence behavior of the referenced timing event. The occurrence behavior can only be determined when a mapping from the timing events to the implementation can be obtained. However, such an occurrence behavior can also be described by the modeler as an assumption or as a requirement about the occurrence of the event.			
Base	*ARObject*, *Identifiable*, *MultilanguageReferrable*, *Referrable*, *TimingConstraint*, *Traceable*			
Subclasses	ArbitraryEventTriggering, BurstPatternEventTriggering, ConcretePatternEventTriggering, PeriodicEventTriggering, SporadicEventTriggering			
Aggregated by	*TimingExtension*.timingGuarantee, *TimingExtension*.timingRequirement			
Attribute	***Type***	***Mult.***	***Kind***	***Note***
event	TimingDescriptionEvent	0..1	ref	The referenced timing event **Tags:** atp.Splitkey=event

Table 2.54: EventTriggeringConstraint

[constr_6818] Multiplicity of EventTriggeringConstraint.event

Imposition time: IT_TimingDescriptionReady

⌈For each EventTriggeringConstraint, the reference in the role event shall exist⌋

2.4.1.2.1 PeriodicEventTriggering

Class	**PeriodicEventTriggering**			
Note	Describes the behavior of an event with a strict periodic occurrence pattern, given by period. Additionally, it is possible to soften the strictness of the periodic occurrence behavior by specifying a jitter, so that there can be a deviation from the period up to the size of the jitter.			
Base	*ARObject*, *EventTriggeringConstraint*, *Identifiable*, *MultilanguageReferrable*, *Referrable*, *TimingConstraint*, *Traceable*			
Aggregated by	*TimingExtension*.timingGuarantee, *TimingExtension*.timingRequirement			
Attribute	***Type***	***Mult.***	***Kind***	***Note***
jitter	MultidimensionalTime	0..1	aggr	The maximum deviation of the periodic event occurrence. **Tags:** atp.Splitkey=jitter xml.sequenceOffset=20

▽

△

Class	**PeriodicEventTriggering**			
minimumInter ArrivalTime	MultidimensionalTime	0..1	aggr	The minimum time distance between subsequent consecutive occurrences of the associated event. If the `minimumInterArrivalTime` is less than the `period` minus the `jitter`, then the `minimumInterArrivalTime` has no effect on the properties of the constraint. **Tags:** atp.Splitkey=minimumInterArrivalTime xml.sequenceOffset=10
period	MultidimensionalTime	0..1	aggr	The periodic distance between subsequent occurrences of the event. **Tags:** atp.Splitkey=period xml.sequenceOffset=30

Table 2.55: PeriodicEventTriggering

Let t_n be the point-in-time of the n-th occurrence of the event. A `PeriodicEventTriggering` Constraint is satisfied if, and only if, at least one reference point-in-time $t_{reference}$ exists such that for every occurrence of the event at t_n the following holds true:

$$t_{reference} + (n-1)period \leq t_n \leq t_{reference} + (n-1)period + jitter$$

and for all of those event occurrences the minimum distance shall be less than or equal to `minimumInterArrivalTime`.

$$\exists t_{reference} \mid \forall n: \quad t_{reference} + (n-1)period \leq t_n \leq t_{reference} + (n-1)period + jitter$$
$$AND \quad \forall n: \quad t_{n+1} - t_n \leq minimumInterArrivalTime$$

Figure 2.42 illustrates the parameters of the `PeriodicEventTriggering`. The upper part of this figure shows the case that the value of `jitter` is less than the value of the parameter `period`; whereas the lower part of this figure shows the `jitter` $\geq$ `period`.

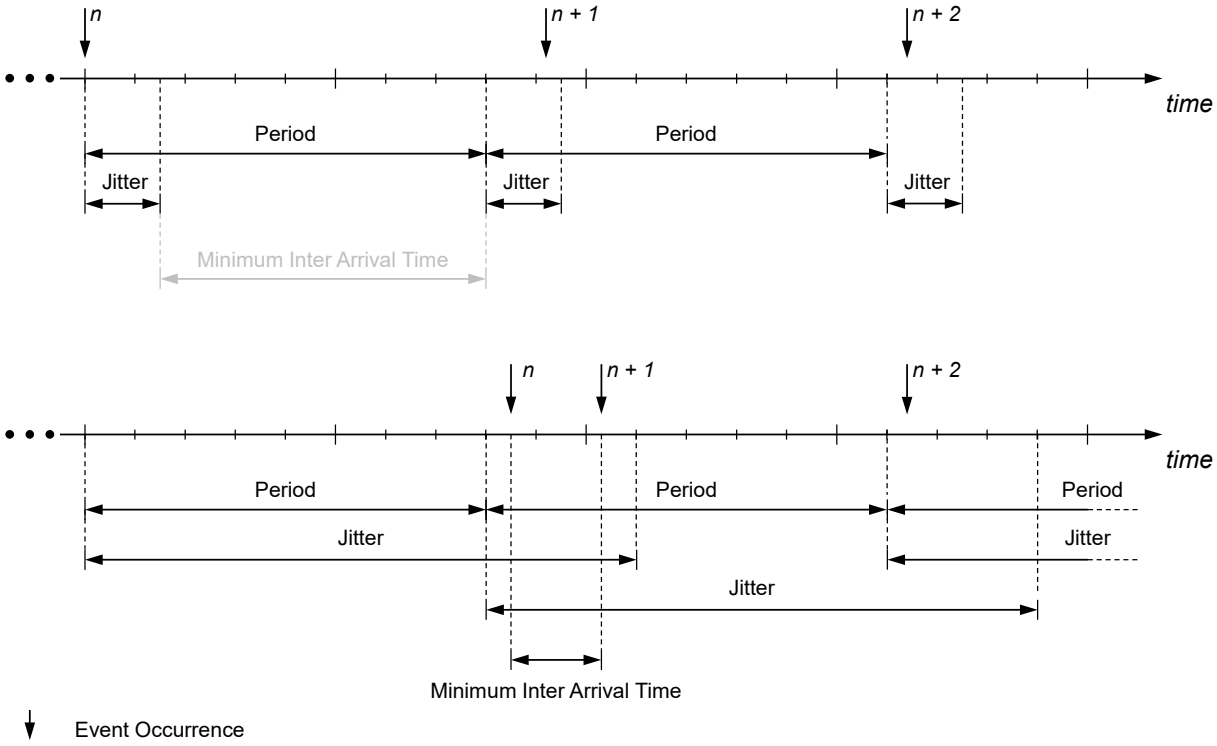

Figure 2.42: Parameters characterizing the `PeriodicEventTriggering`

`Example`: A `PeriodicEventTriggering` Constraint is specified with the following parameters: `period`=`6ms` and `jitter`=`2ms`. In other words, one imposes a timing constraint on an event to occur every `6ms` and specifies that a deviation of `2ms` is tolerable.

In addition, it is assumed that the `minimumInterArrivalTime`=`1ms` and therefore has no impact on the timing of the event's occurrences. This timing constraint is shown in Figure 2.43. The repeating gray-colored rectangles in this figure indicate the time intervals during which the event may occur; i.e. they demarcate the subsequent time intervals the event is expected to occur.

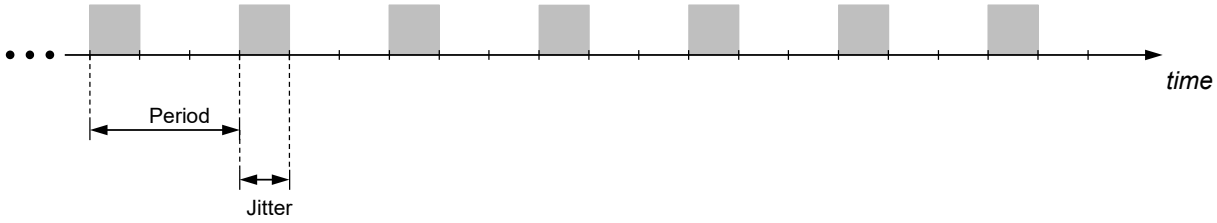

Figure 2.43: Example of a `PeriodicEventTriggering` Constraint

The following figures show various event occurrences recorded during the observation of a system subject to analysis. The time interval for the observation is given by $t_{end-observation} - t_{start-observation}$. In the given `example`, the system is observed for a period of `33.6ms`.

The subsequent event occurrences shown in Figure 2.44 satisfy the given `PeriodicEventTriggering` constraint, because all occurrences of the event observed during

the observation time interval happen in their corresponding time interval given by `period` and `jitter`.

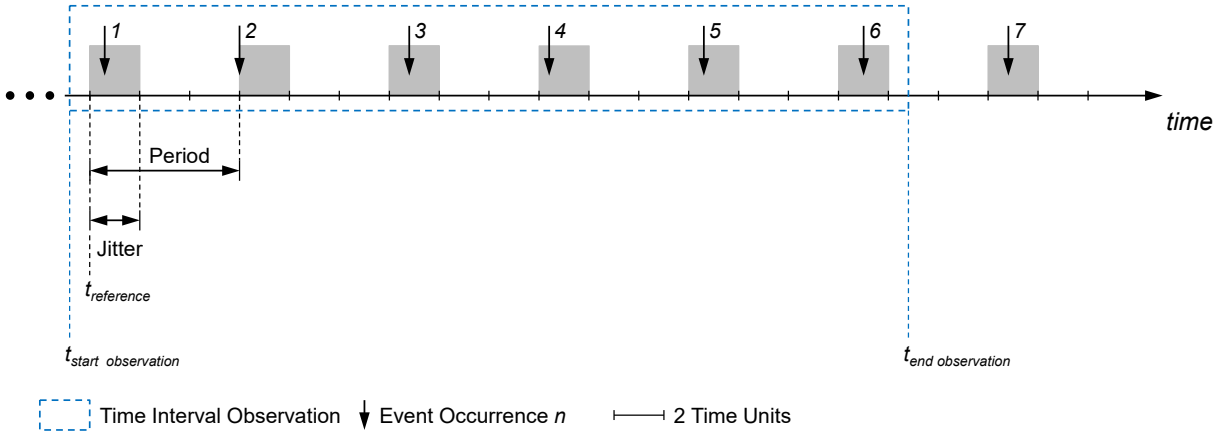

Figure 2.44: Event occurrences satisfying the given `PeriodicEventTriggering` Constraint shown in the `example`

The subsequent event occurrences shown in Figure 2.45 satisfy the given periodic event triggering constraint, because all occurrences of the event observed during the observation time interval happen in their corresponding time interval given by `period` and `jitter`. In contrast to the example shown in Figure 2.44 the reference point-in-time is another one.

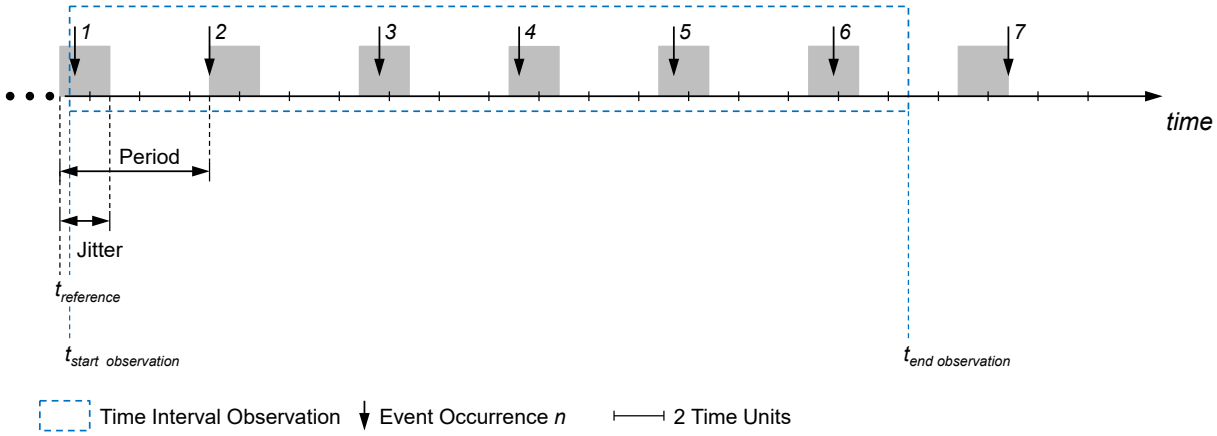

Figure 2.45: Event occurrences satisfying the given `PeriodicEventTriggering` Constraint shown in the `example`, but with another reference point-in-time $t_{reference}$.

The subsequent event occurrences shown in Figure 2.46 violate the given `PeriodicEventTriggering` constraint, because the fifth occurrence of the event does not happen in it's corresponding time interval given by `period` and `jitter`. In other words, there does not exist a reference point-in-time that ensures that all occurrences of the event observed during the observation time interval happen in their corresponding time interval given by `period` and `jitter`. This results in a violation of the parameters `period` and `jitter`.

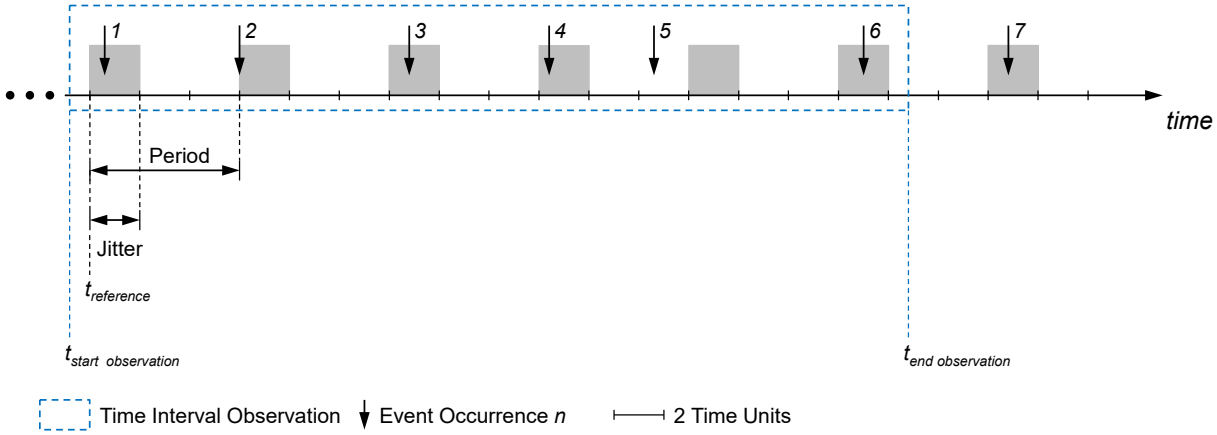

Figure 2.46: Event occurrences violating the given `PeriodicEventTriggering` Constraint shown in the example at the beginning of this subsection.

The subsequent event occurrences shown in Figure 2.47 violate the given periodic event triggering constraint, because the fourth occurrence of the event does not happen in it's corresponding time interval given by `period` and `jitter`. In other words, the fourth occurrence of the event happens in the time interval the fifth occurrence of the event happens and therefore violates the specified `jitter`.

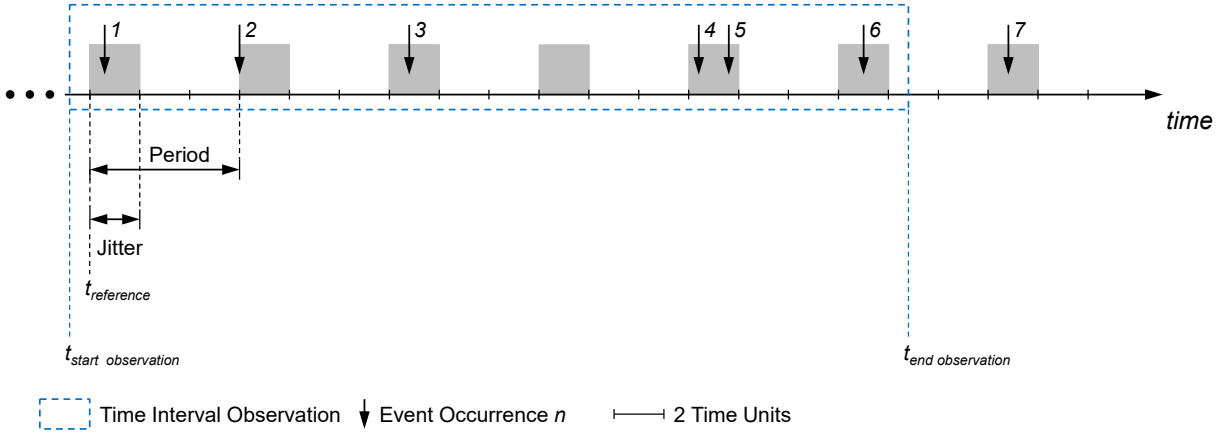

Figure 2.47: Event occurrences satisfying the given `PeriodicEventTriggering` Constraint shown in the `example`

[constr_4543] Maximum value of `minimumInterArrivalTime`

Imposition time: `IT_TimingDescriptionReady`

⌈The `minimumInterArrivalTime` shall be $\leq$ the `period`.⌋

[constr_6819] Multiplicity of `PeriodicEventTriggering.jitter`

Imposition time: `IT_TimingDescriptionReady`

⌈For each `PeriodicEventTriggering`, the attribute `jitter` shall exist⌋

[constr_6820] Multiplicity of `PeriodicEventTriggering.minimumInterArrivalTime`

Imposition time: `IT_TimingDescriptionReady`

⌈For each `PeriodicEventTriggering`, the attribute `minimumInterArrivalTime` shall exist⌋

[constr_6821] Multiplicity of `PeriodicEventTriggering.period`

Imposition time: `IT_TimingDescriptionReady`

⌈For each `PeriodicEventTriggering`, the attribute `period` shall exist⌋

2.4.1.2.2 SporadicEventTriggering

In contrast to a `PeriodicEventTriggering`, a `SporadicEventTriggering` permits events which may not necessarily occur. It adds one additional parameter: the `maximumInterArrivalTime` to specify the largest possible time distance between two `TimingDescriptionEvent` occurrences.

Class	**SporadicEventTriggering**			
Note	Describes the behavior of an event which occurs occasionally or singularly.			
Base	*ARObject*, *EventTriggeringConstraint*, *Identifiable*, *MultilanguageReferrable*, *Referrable*, *TimingConstraint*, *Traceable*			
Aggregated by	*TimingExtension*.timingGuarantee, *TimingExtension*.timingRequirement			
Attribute	***Type***	***Mult.***	***Kind***	***Note***
jitter	MultidimensionalTime	0..1	aggr	The maximum devation of the sporadic event occurrence. Jitter=max |nthPeriod - standardPeriod| **Tags:** atp.Splitkey=jitter xml.sequenceOffset=30
maximumInterArrivalTime	MultidimensionalTime	0..1	aggr	The maximum time distance between two consecutive (subsequent) occurrences of the associated event. **Tags:** atp.Splitkey=maximumInterArrivalTime xml.sequenceOffset=20
minimumInterArrivalTime	MultidimensionalTime	0..1	aggr	The minimum time distance between two consecutive (subsequent) occurrences of the associated event. **Tags:** atp.Splitkey=minimumInterArrivalTime xml.sequenceOffset=10
period	MultidimensionalTime	0..1	aggr	The periodic distance between subsequent occurrences of the event. **Tags:** atp.Splitkey=period xml.sequenceOffset=40

Table 2.56: SporadicEventTriggering

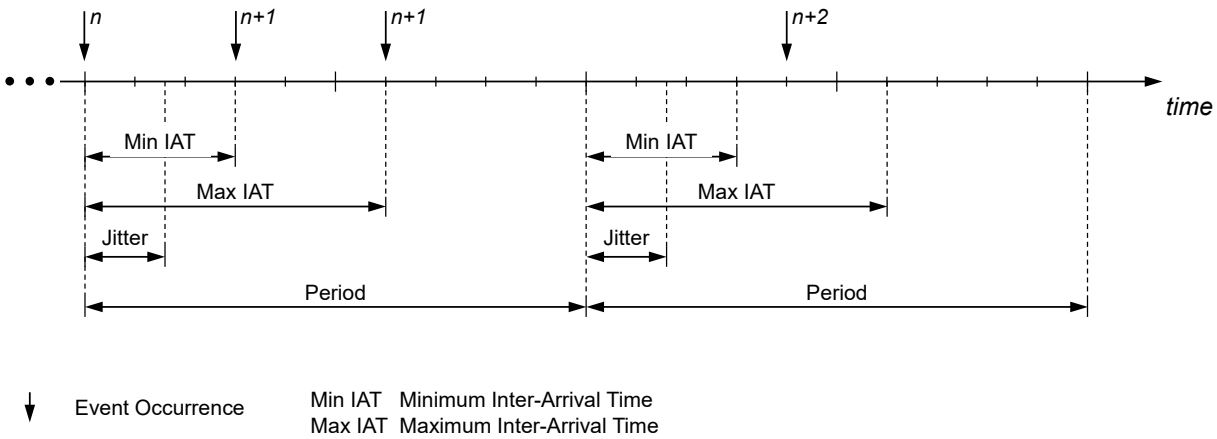

Figure 2.48: Parameters characterizing the `SporadicEventTriggering` Constraint

[constr_6822] Multiplicity of `SporadicEventTriggering.maximumInterArrivalTime`

Imposition time: `IT_TimingDescriptionReady`

⌈For each `SporadicEventTriggering`, the attribute `maximumInterArrivalTime` shall exist⌋

[constr_6823] Multiplicity of `SporadicEventTriggering.minimumInterArrivalTime`

Imposition time: `IT_TimingDescriptionReady`

⌈For each `SporadicEventTriggering`, the attribute `minimumInterArrivalTime` shall exist⌋

2.4.1.2.3 ConcretePatternEventTriggering

Class	**ConcretePatternEventTriggering**			
Note	Describes the behavior of an event that occurs according to a precisely known pattern.			
Base	*ARObject*, *EventTriggeringConstraint*, *Identifiable*, *MultilanguageReferrable*, *Referrable*, *TimingConstraint*, *Traceable*			
Aggregated by	*TimingExtension*.timingGuarantee, *TimingExtension*.timingRequirement			
Attribute	***Type***	***Mult.***	***Kind***	***Note***
offset	MultidimensionalTime	*	aggr	The offset for each occurrence of the event in the specified time interval. A list of point-in-times in the time interval given by the parameter patternLength at which the event occurs. **Tags:** atp.Splitkey=offset xml.name=TIME-VALUE xml.roleElement=true xml.sequenceOffset=10 xml.typeElement=false

▽

△

Class	**ConcretePatternEventTriggering**			
patternJitter	MultidimensionalTime	0..1	aggr	The maximum deviation of the time interval's starting point from the beginning of the given period. This parameter is only applicable in conjunction with the parameter `patternPeriod`. **Tags:** atp.Splitkey=patternJitter
patternLength	MultidimensionalTime	0..1	aggr	The duration of the time interval within which the event repeatedly occurs. The event occurs at concrete points in time within the given time interval. **Tags:** atp.Splitkey=patternLength xml.sequenceOffset=20
patternPeriod	MultidimensionalTime	0..1	aggr	The time distance between the beginnings of subsequent repetitions of the given concrete pattern. **Tags:** atp.Splitkey=patternPeriod

Table 2.57: ConcretePatternEventTriggering

Figure 2.49 and Figure 2.50 illustrate the parameters of the `ConcretePatternEventTriggering` in use.

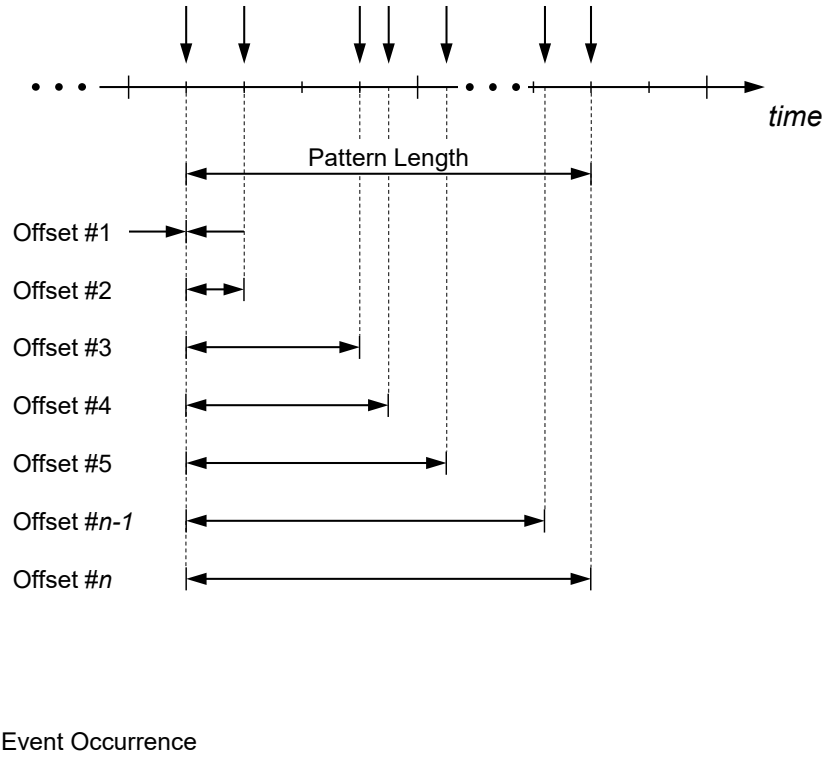

Figure 2.49: Parameters characterizing the `ConcretePatternEventTriggering` Constraint

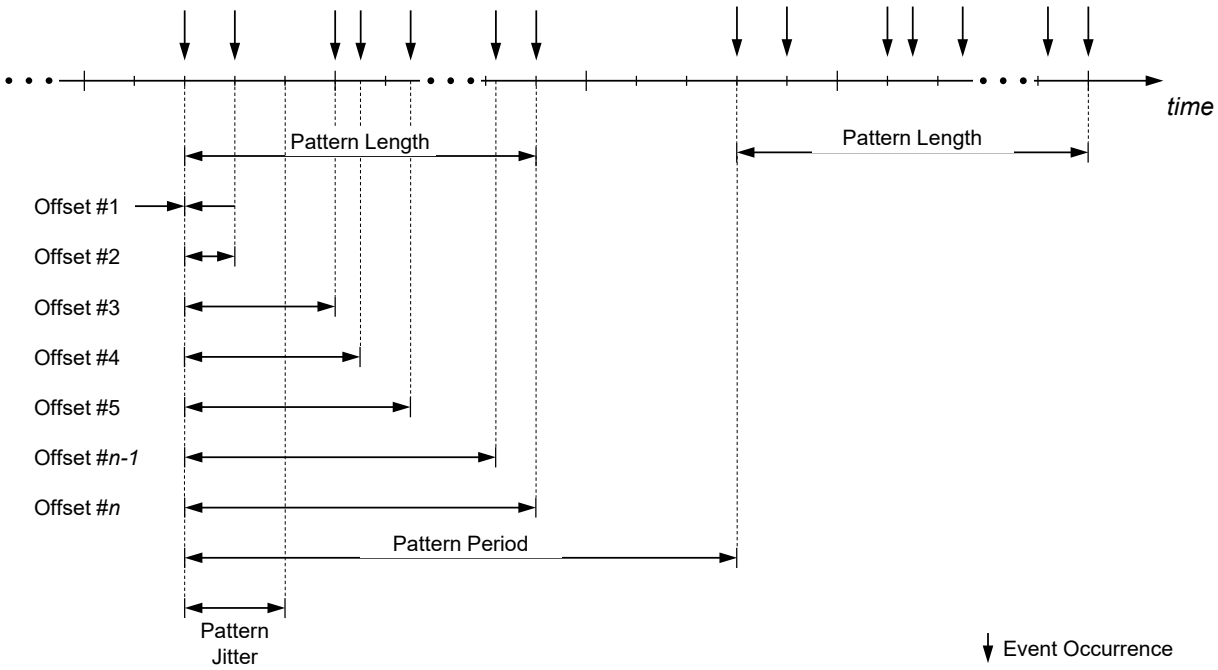

Figure 2.50: Parameters characterizing the `ConcretePatternEventTriggering` Constraint when periodically repeated

[constr_4519] Specifying `patternLength`

Imposition time: `IT_TimingDescriptionReady`

⌈The `patternLength` shall be specified such that the following holds: $0 \leq max(\texttt{offset}) \leq \texttt{patternLength}$.⌋

[constr_4544] Specifying `patternLength`, `patternJitter` and `patternPeriod`

Imposition time: `IT_TimingDescriptionReady`

⌈The `patternLength`, `patternJitter` and `patternPeriod` shall be specified such that the following holds: $\texttt{patternLength} + \texttt{patternJitter} < \texttt{patternPeriod}$.⌋

[constr_6824] Multiplicity of `ConcretePatternEventTriggering.patternLength`

Imposition time: `IT_TimingDescriptionReady`

⌈For each `ConcretePatternEventTriggering`, the attribute `patternLength` shall exist⌋

[constr_6898] Multiplicity of `ConcretePatternEventTriggering.offset`

Imposition time: `IT_TimingDescriptionReady`

⌈For each `ConcretePatternEventTriggering`, the attribute `offset` shall exist⌋

2.4.1.2.4 BurstPatternEventTriggering

Class	**BurstPatternEventTriggering**			
Note	Describes the maximum number of occurrences of the same event in a given time interval. Typically used to model a worst case activation scenario.			
Base	*ARObject*, *EventTriggeringConstraint*, *Identifiable*, *MultilanguageReferrable*, *Referrable*, *TimingConstraint*, *Traceable*			
Aggregated by	*TimingExtension*.timingGuarantee, *TimingExtension*.timingRequirement			
Attribute	***Type***	***Mult.***	***Kind***	***Note***
maxNumberOfOccurrences	PositiveInteger	0..1	attr	The maximum number of event occurrences within the given time interval. The event may never occur, or may occur N times between 1 and `maxNumberOfOccurrences`. If the parameter `minNumberOfOccurrences` is specified then the event occurs at least the number of times specified by `minNumberOfOccurrences` and at maximum by `maxNumberOfOccurrences`.
minimumInterArrivalTime	MultidimensionalTime	0..1	aggr	Specifies the minimum distance between subsequent occurrences of the event within the given time interval. **Tags:** atp.Splitkey=minimumInterArrivalTime
minNumberOfOccurrences	PositiveInteger	0..1	attr	The minimum number of event occurrences within the given time interval. **Tags:** xml.sequenceOffset=10
patternJitter	MultidimensionalTime	0..1	aggr	The maximum deviation of the time interval's starting point from the beginning of the given period. This parameter is only applicable in conjunction with the parameter `patternPeriod` **Tags:** atp.Splitkey=patternJitter
patternLength	MultidimensionalTime	0..1	aggr	The duration of the time interval within which the event repeatedly occurs. The event occurs at arbitrary points in time within the given time interval. **Tags:** atp.Splitkey=patternLength
patternPeriod	MultidimensionalTime	0..1	aggr	The time distance between the beginnings of subsequent repetitions of the given burst pattern. **Tags:** atp.Splitkey=patternPeriod

Table 2.58: BurstPatternEventTriggering

Figure 2.51 and Figure 2.52 illustrate the parameters of the `BurstPatternEventTriggering` in use.

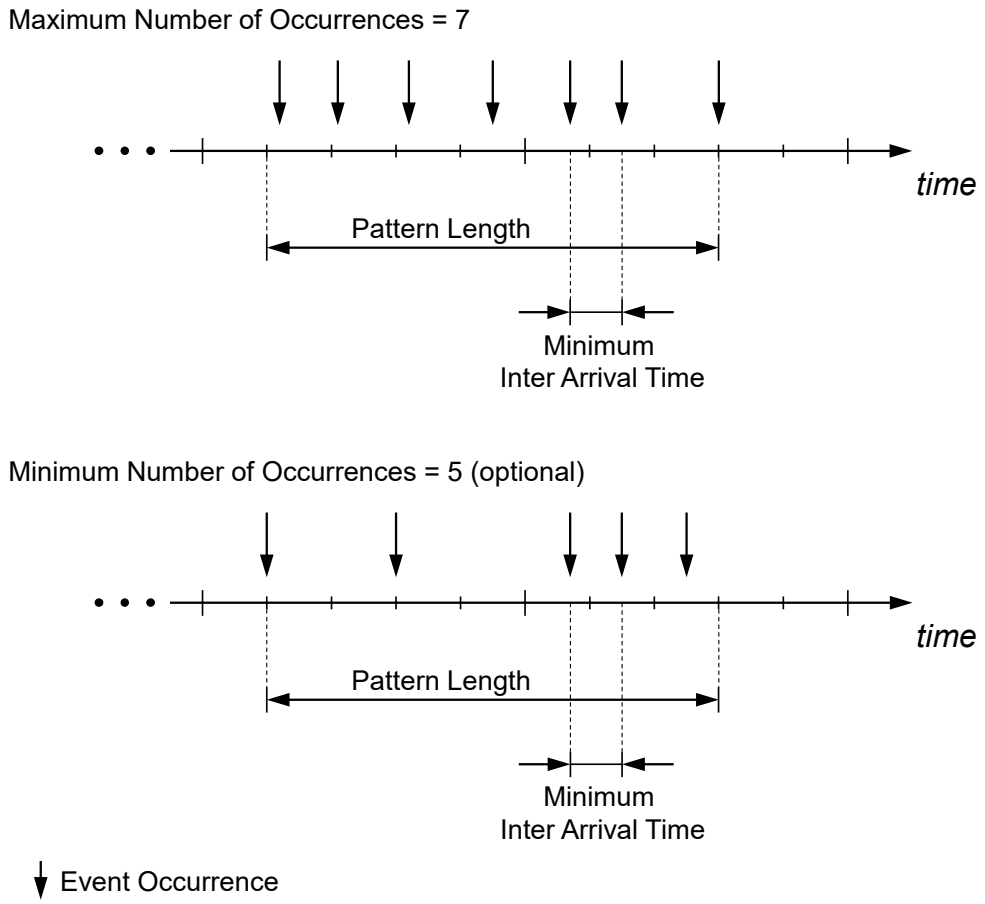

Figure 2.51: Parameters characterizing the `BurstPatternEventTriggering` Constraint

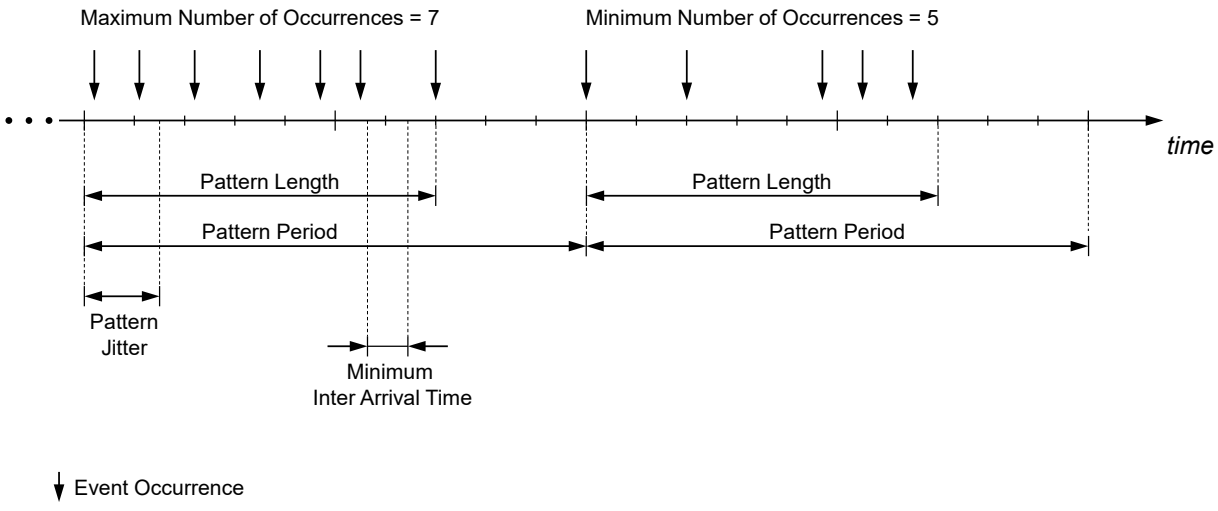

Figure 2.52: Parameters characterizing the `BurstPatternEventTriggering` Constraint when periodically repeated

[constr_4505] Specifying minimum and maximum number of occurrences

Imposition time: IT_TimingDescriptionReady

⌈The minimum and maximum number of occurrences shall be specified such that the following holds: $0 \leq$ minNumberOfOccurrences $\leq$ maxNumberOfOccurrences.⌋

[constr_4506] Specifying minimum inter-arrival time and pattern length

Imposition time: IT_TimingDescriptionReady

⌈The minimumInterArrivalTime and patternLength shall be specified such that the following holds: $0 <$ minimumInterArrivalTime $\leq$ patternLength.⌋

[constr_4507] Specifying pattern length, pattern jitter and patter period

Imposition time: IT_TimingDescriptionReady

⌈The patternLength, patternJitter and patternPeriod shall be specified such that the following holds: patternLength + patternJitter < patternPeriod.⌋

[constr_6825] Multiplicity of BurstPatternEventTriggering.maxNumberOfOccurrences

Imposition time: IT_TimingDescriptionReady

⌈For each BurstPatternEventTriggering, the attribute maxNumberOfOccurrences shall exist⌋

[constr_6826] Multiplicity of BurstPatternEventTriggering.minimumInterArrivalTime

Imposition time: IT_TimingDescriptionReady

⌈For each BurstPatternEventTriggering, the attribute minimumInterArrivalTime shall exist⌋

[constr_6827] Multiplicity of BurstPatternEventTriggering.patternLength

Imposition time: IT_TimingDescriptionReady

⌈For each BurstPatternEventTriggering, the attribute patternLength shall exist⌋

2.4.1.2.5 ArbitraryEventTriggering

In contrast to the ConcretePatternEventTriggering, this event triggering is not as strict to the occurrence of an event, but generally describes event occurrences.

Class	ArbitraryEventTriggering			
Note	Describes that an event occurs occasionally, singularly, irregularly or randomly. The primary purpose of this event triggering is to abstract event occurrences captured by data acquisition tools (background debugger, trace analyzer, etc.) during system runtime.			
Base	*ARObject*, *EventTriggeringConstraint*, *Identifiable*, *MultilanguageReferrable*, *Referrable*, *TimingConstraint*, *Traceable*			
Aggregated by	*TimingExtension*.timingGuarantee, *TimingExtension*.timingRequirement			
Attribute	**Type**	**Mult.**	**Kind**	**Note**
confidenceInterval	ConfidenceInterval	*	aggr	List of confidence intervals. **Tags:** atp.Splitkey=confidenceInterval xml.sequenceOffset=30
maximumDistance	MultidimensionalTime	*	aggr	The nth array element describes the maximum distance that can be observed for a sample of n+1 event occurrences. This is an array with an identical number of elements as for the minimumDistance. **Tags:** atp.Splitkey=maximumDistance xml.name=TIME-VALUE xml.roleElement=true xml.sequenceOffset=20 xml.typeElement=false
minimumDistance	MultidimensionalTime	*	aggr	The nth array element describes the minimum distance that can be observed for a sample of n+1 event occurrences. This is an array with an identical number of elements as for the maximumDistance. **Tags:** atp.Splitkey=minimumDistance xml.name=TIME-VALUE xml.roleElement=true xml.sequenceOffset=10 xml.typeElement=false

Table 2.59: ArbitraryEventTriggering

Class	ConfidenceInterval			
Note	Additionally to the list of measured distances of event occurrences, a confidence interval can be specified for the expected distance of two consecutive event occurrences with a given probability.			
Base	*ARObject*			
Aggregated by	ArbitraryEventTriggering.confidenceInterval			
Attribute	**Type**	**Mult.**	**Kind**	**Note**
lowerBound	MultidimensionalTime	0..1	aggr	The lower bound of the expected distance of two consecutive event occurrences. **Tags:** atp.Splitkey=lowerBound
propability	Float	0..1	attr	The probability for the measured lower and upper bound of the confidence interval.
upperBound	MultidimensionalTime	0..1	aggr	The upper bound of the expected distance of two consecutive event occurrences. **Tags:** atp.Splitkey=upperBound

Table 2.60: ConfidenceInterval

Figure 2.53 illustrates the parameters of the `ArbitraryEventTriggering` in use.

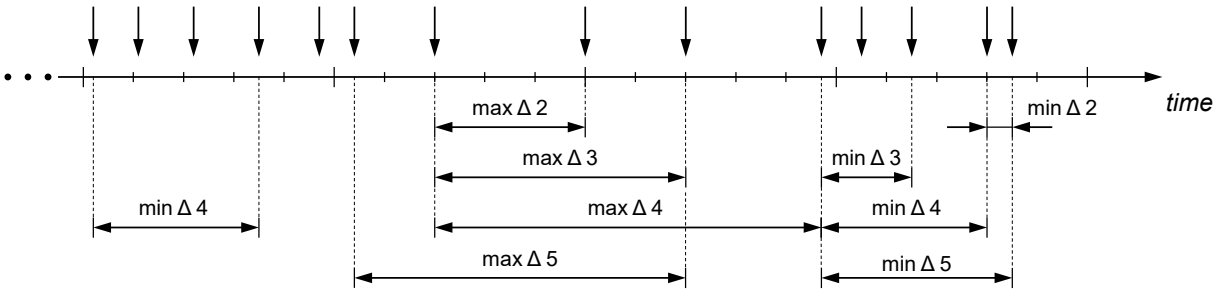

min Δ*n*	Least minimum inter-arrival time between *n* subsequent occurrences of the event E and n = {2, 3, 4, ...}
max Δ*n*	Major maximum inter-arrival time between *n* subsequent occurrences of the event E and n = {2, 3, 4, ...}

Event Occurrence

Figure 2.53: Parameters characterizing the `ArbitraryEventTriggering` Constraint

[constr_6828] Multiplicity of `ArbitraryEventTriggering.minimumDistance`

Imposition time: `IT_TimingDescriptionReady`

⌈For each `ArbitraryEventTriggering`, the reference in the role `minimumDistance` shall exist at least once⌋

[constr_6829] Multiplicity of `ArbitraryEventTriggering.maximumDistance`

Imposition time: `IT_TimingDescriptionReady`

⌈For each `ArbitraryEventTriggering`, the reference in the role `maximumDistance` shall exist at least once⌋

[constr_6830] Multiplicity of `ConfidenceInterval.lowerBound`

Imposition time: `IT_TimingDescriptionReady`

⌈For each `ConfidenceInterval`, the attribute `lowerBound` shall exist⌋

[constr_6831] Multiplicity of `ConfidenceInterval.propability`

Imposition time: `IT_TimingDescriptionReady`

⌈For each `ConfidenceInterval`, the attribute `propability` shall exist⌋

[constr_6832] Multiplicity of `ConfidenceInterval.upperBound`

Imposition time: `IT_TimingDescriptionReady`

⌈For each `ConfidenceInterval`, the attribute `upperBound` shall exist⌋

2.4.1.3 OffsetTimingConstraint

An `OffsetTimingConstraint` bounds the time offset between the occurrence of two timing events, without requiring a direct functional dependency between the source and the target.

This constraint type is frequently used in combination with the timing event TDEvent-CycleStart as source. In this case, the target event (e.g. the start of a Runnable-Entity) is in most of the cases functional independent from the the source event.

Class	**OffsetTimingConstraint**			
Note	Bounds the time offset between the occurrence of two timing events, without requiring a direct functional dependency between the source and the target. If the target event occurs, it is expected to occur earliest with the minimum, and latest with the maximum offset relatively after the occurrence of the source event. Note: not every source event occurrence shall be followed by a target event occurrence. In contrast to LatencyTimingConstraint, there shall not necessarily be a causal dependency between the source and target event.			
Base	*ARObject*, *Identifiable*, *MultilanguageReferrable*, *Referrable*, *TimingConstraint*, *Traceable*			
Aggregated by	*TimingExtension*.timingGuarantee, *TimingExtension*.timingRequirement			
Attribute	***Type***	***Mult.***	***Kind***	***Note***
maximum	MultidimensionalTime	0..1	aggr	The maximum offset the target event occurs relatively after the occurrence of the source event. **Tags:** atp.Splitkey=maximum xml.sequenceOffset=20
minimum	MultidimensionalTime	0..1	aggr	The mimum offset the target event occurs relatively after the occurrence of the source event. **Tags:** atp.Splitkey=minimum xml.sequenceOffset=10
source	TimingDescriptionEvent	0..1	ref	The timing event that the target event is to be synchronized with. **Tags:** atp.Splitkey=source
target	TimingDescriptionEvent	0..1	ref	The timing event which is expected to occur timely after the source event. **Tags:** atp.Splitkey=target

Table 2.61: OffsetTimingConstraint

[constr_6842] Multiplicity of OffsetTimingConstraint.maximum

Imposition time: IT_TimingDescriptionReady

⌈For each OffsetTimingConstraint, the attribute maximum shall exist⌋

[constr_6843] Multiplicity of OffsetTimingConstraint.minimum

Imposition time: IT_TimingDescriptionReady

⌈For each OffsetTimingConstraint, the attribute minimum shall exist⌋

[constr_6844] Multiplicity of OffsetTimingConstraint.source

Imposition time: IT_TimingDescriptionReady

⌈For each OffsetTimingConstraint, the reference in the role source shall exist⌋

[constr_6845] Multiplicity of OffsetTimingConstraint.target

Imposition time: IT_TimingDescriptionReady

⌈For each OffsetTimingConstraint, the reference in the role target shall exist⌋

2.4.1.4 AgeConstraint

Sometimes it is necessary to specify the age of data, when it arrives at a SWC on its required port with SenderReceiverInterface. If the sender of the data is known, a TimingDescriptionEventChain can be defined from the sender to the receiver port and a LatencyTimingConstraint with *age* semantics represents the specification of the data age. However, the actual sender of the data may not be known, in which case the definition of a TimingDescriptionEventChain is not possible.

Typically, the AgeConstraint restricts the time interval between the physical creation of data by a sender and the availability of the data in the receiver. The permitted scope of an AgeConstraint is a limited only to certain TimingDescriptionEvent types [constr_4504]. Every time the event occurs, the data shall have the specified data age when evaluated in the receiver context.

At a later stage during the development, when the refined software architecture exposes the relation between the actual sender of the data and the receiver, an event chain between the sending and receiving point in time shall be defined and associated with a LatencyTimingConstraint (see 2.4.2.2) in order to refine the previous defined age constraint.

Class	**AgeConstraint**			
Note	Constrains the scope by a minimum and maximum time boundary.			
Base	*ARObject*, *Identifiable*, *MultilanguageReferrable*, *Referrable*, *TimingConstraint*, *Traceable*			
Aggregated by	*TimingExtension*.timingGuarantee, *TimingExtension*.timingRequirement			
Attribute	***Type***	***Mult.***	***Kind***	***Note***
maximum	MultidimensionalTime	0..1	aggr	The received event referenced by scope should not exceed this upper bound. **Tags:** atp.Splitkey=maximum
minimum	MultidimensionalTime	0..1	aggr	The received event referenced by scope should not precede this lower bound. **Tags:** atp.Splitkey=minimum
scope	TimingDescriptionEvent	0..1	ref	TimingDescriptionEvent to be constrained. **Tags:** atp.Splitkey=scope

Table 2.62: AgeConstraint

[constr_4504] Restriction of the scope of an AgeConstraint

Imposition time: IT_TimingDescriptionReady

⌈An AgeConstraint may only reference either a:

- TDEventVariableDataPrototype.tdEventVariableDataPrototype-Type==variableDataPrototypeReceived
- TDEventTrigger.tdEventTriggerType==triggerActivated

in the role scope⌋

Since an AgeConstraint is intended to be used only in those scenarios without a sending context it is prudent to restrict it to the receiving side context of the intended

sub-class of TimingDescriptionEvent and further constrain the referenced port context to receiver side PortPrototypes.

[constr_6914] Restriction of the portPrototype context of an AgeConstraint

Imposition time: IT_TimingDescriptionReady

⌈An AgeConstraint.scope.portPrototype shall reference only sub-classes of AbstractRequiredPortPrototype⌋

2.4.2 TimingConstraints on TimingDescriptionEventChains

A TimingConstraint on a TimingDescriptionEventChain imposes a restriction/expectation on level of the *whole* TimingDescriptionEventChain. In particular the LatencyTimingConstraint is used to specify a reaction and age, for example if a stimulus event occurs then the corresponding response event shall occur not later than a given amount of time. The SynchronizationTimingConstraint is used to specify that stimuli or response events shall occur within a given time interval (tolerance) to be said to occur simultaneous and synchronous respectively.

Generally a TimingConstraint, when applied to TimingDescriptionEventChain, refers to a given scope/chain context with a temporal restriction, present in most sub-classes. The remaining attributes are context specific. As the TimingDescriptionEventChain has a semantic of a directed acyclic graph, the direction is obvious, but it matters whether a single TimingDescriptionEventChain or a group of TimingDescriptionEventChain are constrained.

In 2.54 differing sub-classes of TimingConstraints on TimingDescriptionEventChains are shown.

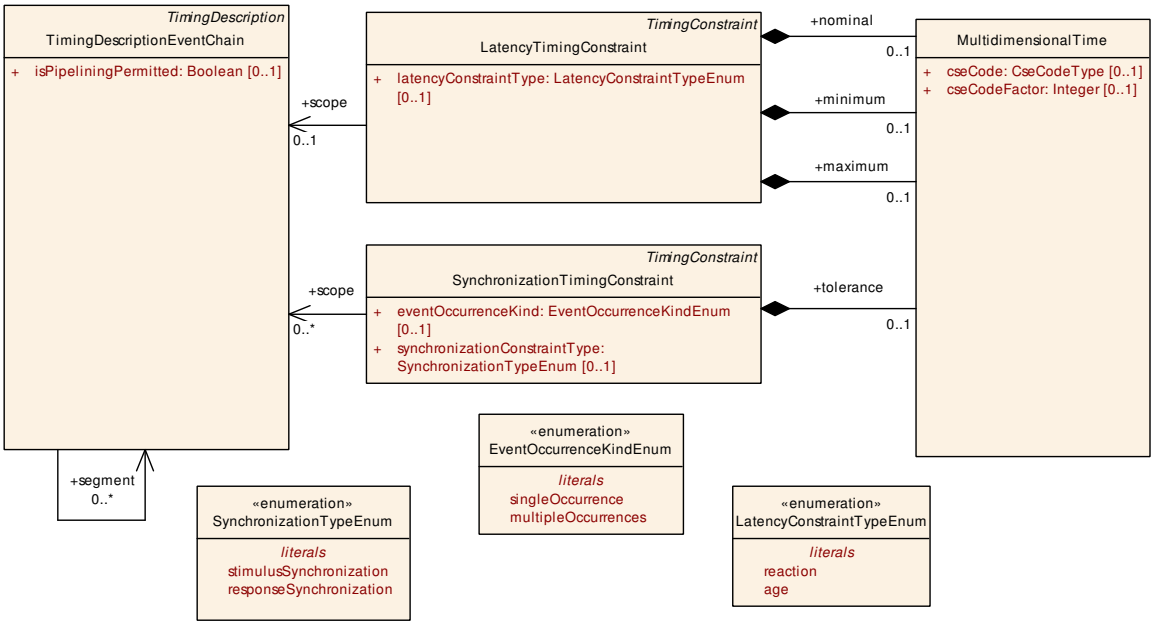

Figure 2.54: TimingConstraints on TimingDescriptionEventChains

2.4.2.1 SynchronizationTimingConstraint

The objective of synchronization in a distributed environment is to establish and maintain a consistent time base for the interaction between different subsystems, in order to obtain correct runtime order and avoid unexpected race conditions. While mechanisms to establish synchronization need to be provided at the implementation level, the necessity for synchronization needs to be expressed at design level. For this purpose, synchronization constraints are used.

A `SynchronizationTimingConstraint` imposes a synchronization restriction among either the `stimulus` or `response` event occurrences of two or more `TimingDescriptionEventChain`s. In the former case (stimulus synchronization) the referenced `TimingDescriptionEventChain`s shall have the same `response` event (join), or in the latter case (response synchronization) they shall have the same `stimulus` event (fork).

Class	**SynchronizationTimingConstraint**			
Note	This constraint is used to restrict the timing behavior of different, but correlated events or event chains, with regard to synchronization. Two scenarios are supported: • If (`synchronizationConstraintType==responseSynchronization`) – `TimingDescriptionEvent`s: An arbitrary number of correlated events which play the role of responses shall occur synchronously with respect to a predefined tolerance. – `TimingDescriptionEventChain`s: An arbitrary number of correlated event chains with a common stimulus, but different responses, where the responses shall occur synchronously with respect to a predefined tolerance. • If (`synchronizationConstraintType==stimulusSynchronization`) – `TimingDescriptionEvent`s:An arbitrary number of correlated events which play the role of stimuli shall occur synchronously with respect to a predefined tolerance. – `TimingDescriptionEventChain`s: An arbitrary number of correlated event chains with a common response, but different stimuli, where the stimuli shall occur synchronously with respect to a predefined tolerance. In case the constraint is imposed on events the following two scenarios are supported: • If (`eventOccurrenceKind==singleOccurrence`): any of the events shall occur only once in the given time interval. • If (`eventOccurrenceKind==multipleOccurrences`): any of the events may occur more than once in the given time interval. In other words multiple occurrences of an event within the given time interval are permitted.			
Base	*ARObject*, *Identifiable*, *MultilanguageReferrable*, *Referrable*, *TimingConstraint*, *Traceable*			
Aggregated by	*TimingExtension*.timingGuarantee, *TimingExtension*.timingRequirement			
Attribute	***Type***	***Mult.***	***Kind***	***Note***
event OccurrenceKind	EventOccurrenceKind Enum	0..1	attr	Indicates whether the referenced events shall occur only once (single occurrence) or multiple times (multiple occurrences) in the given time interval.
scope	TimingDescriptionEvent Chain	*	ref	The event chains that are in the scope of the constraint. Mutually exclusive to `scopeEvent`, see ([constr_4522]). **Tags:** atp.Splitkey=scope
scopeEvent	TimingDescriptionEvent	*	ref	The events that are in the scope of the constraint. Mutually exclusive to `scope`, see ([constr_4522]) **Tags:** atp.Splitkey=scopeEvent

▽

△

Class	**SynchronizationTimingConstraint**			
synchronization ConstraintType	SynchronizationType Enum	0..1	attr	Indicates whether the associated events of the SynchronizationTimingConstraint have a common stimulus or response.
tolerance	MultidimensionalTime	0..1	aggr	The maximum time interval, within which the synchronized events shall occur. The events may occur in any order within this time interval. The time interval starts at the point-in-time when one of the referenced events occurs. **Tags:** atp.Splitkey=tolerance

Table 2.63: SynchronizationTimingConstraint

Enumeration	**SynchronizationTypeEnum**
Note	Specifies the `synchronizationConstraintType` for a `SynchronizationTimingConstraint`.
Aggregated by	SynchronizationTimingConstraint.synchronizationConstraintType
Literal	*Description*
response Synchronization	In case that the Synchronization Timing Constraint is specified for event chains, the response events of the associated event chains shall occur synchronously with respect to the specified tolerance. All associated event chains shall have the same stimulus event. In case that the Synchronization Timing Constraint is specified for events, the associated events shall occur synchronously with respect to the specified tolerance. All associated events represent the response events of a common stimulus event, even such a stimulus event is not known yet or not available in the scope of the model. **Tags:** atp.EnumerationLiteralIndex=0
stimulus Synchronization	In case that the Synchronization Timing Constraint is specified for event chains, the stimulus events of the associated event chains shall occur synchronously with respect to the specified tolerance. All associated event chains shall have the same response event. In case that the Synchronization Timing Constraint is specified for events, the associated events shall occur synchronously with respect to the specified tolerance. All associated events represent the stimulus events of a common response event, even such a response event is not known yet or not available in the scope of the model. **Tags:** atp.EnumerationLiteralIndex=1

Table 2.64: SynchronizationTypeEnum

Enumeration	**EventOccurrenceKindEnum**
Note	Specifies the `eventOccurrenceKind` for a `SynchronizationTimingConstraint`.
Aggregated by	SynchronizationTimingConstraint.eventOccurrenceKind
Literal	*Description*
multiple Occurrences	Specifies that an event may occur more than once in a given time interval. **Tags:** atp.EnumerationLiteralIndex=0
singleOccurrence	The referenced event shall occur only once in a given time interval. Indicates whether the referenced events shall occur only once (single occurrence) or multiple times (multiple occurrences) in the given time interval. **Tags:** atp.EnumerationLiteralIndex=1

Table 2.65: EventOccurrenceKindEnum

The parameters are shown in use in Figure 2.55 and Figure 2.56.

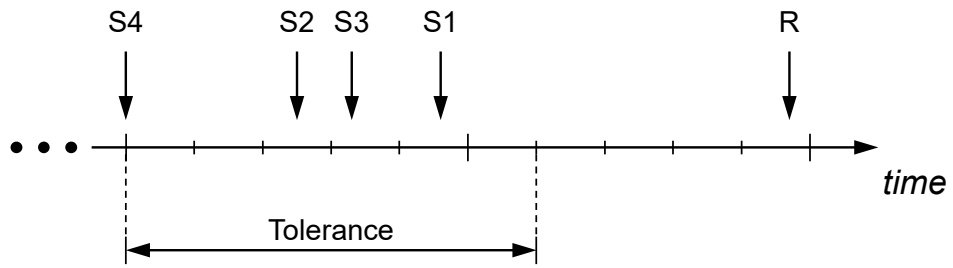

S# Stimulus Event
R Response Event

Event Occurrence

Figure 2.55: `SynchronizationTimingConstraint` imposed on `TimingDescriptionEventChain.stimulus`

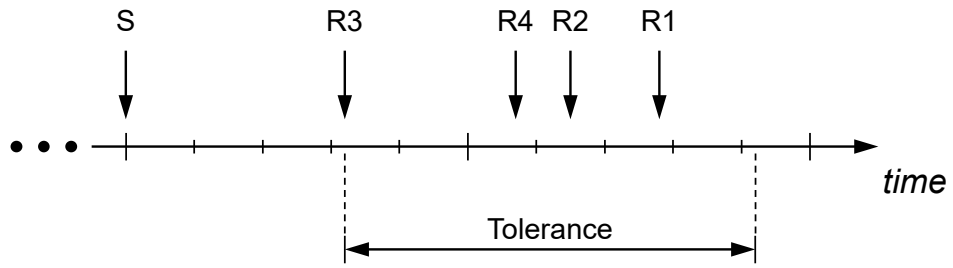

S Stimulus Event
R# Response Event

Event Occurrence

Figure 2.56: `SynchronizationTimingConstraint` imposed on `TimingDescriptionEventChain.response`

An example for synchronizing on *stimuli* of `TimingDescriptionEventChain`s would be an adaptive cruise control that expects data from different sensors, which shall be sampled (quasi) simultaneously with respect to a predefined tolerance.

An example for synchronizing on *responses* of `TimingDescriptionEventChain`s would be the blinking of different indicator lights, which shall occur (quasi) simultaneously with respect to a predefined tolerance.

[constr_4522] `SynchronizationTimingConstraint` shall either reference events or event chains

Imposition time: `IT_TimingDescriptionReady`

⌈The `SynchronizationTimingConstraint` shall either reference `TimingDescriptionEvent`s or `TimingDescriptionEventChain`s, but not both at the same time.⌋

[constr_4514] `SynchronizationTimingConstraint` shall reference at least two event chains

Imposition time: `IT_TimingDescriptionReady`

⌈In the case, that the `SynchronizationTimingConstraint` is imposed on `TimingDescriptionEventChain`s then at least two (2) `TimingDescriptionEventChain`s shall be referenced.⌋

[constr_4521] Specifying attribute `synchronizationConstraintType`

Imposition time: `IT_TimingDescriptionReady`

⌈The attribute `synchronizationConstraintType` shall be specified if the `SynchronizationTimingConstraint` is imposed on `TimingDescriptionEventChain`s.⌋

2.4.2.2 `LatencyTimingConstraint`

A `LatencyTimingConstraint` specifies a `minimum` and/or `maximum` time duration between the occurrence of the `stimulus` and the occurrence of the corresponding `response` of that `TimingDescriptionEventChain`.

The attributes `minimum`, `maximum` and `nominal` of a `LatencyTimingConstraint` can be used to define a lower and upper bound, as well as a nominal value for the latency of the `TimingDescriptionEventChain` in the `scope`.

For example, this could be the time it takes for a `ExecutableEntity` to execute (in which case the `scope` `stimulus`/`response` would reference `TDEventSwcInternalBehavior`) or the processing time for a `ClientServerOperation` (`TDEventOperation`).

2.4.2.2.1 `LatencyConstraintTypeEnum`

There are two 'perspectives' on a `LatencyTimingConstraint`:

age : The `age` of a `response` is the time from the timing event in the latest `stimulus` to the timing event in the corresponding `response`.

The focus is from the `response` perspective rather than from the `stimulus` perspective. When for example, an actuator value is periodically updated, it is of importance that the corresponding input values are not too old. In this case the constrained time of importance is the delay from the latest `stimulus` to a given `response`. The assumption is that latest-is-best, i.e., it is accepted that a value may be overwritten along the path from `stimulus` to `response`.

reaction : The `reaction` time is the time from a given `stimulus` to the first corresponding `response`.

Reaction is utilized when the first reaction to a stimulus is of importance (often the case in body electronics). For example, the time it takes from when a button is pressed, to a light is switched on. Another example, from the chassis domain, is the time from the brake pedal is pressed until the brakes are activated. In both cases the constrained time of importance is the delay from a given stimulus to the first corresponding response.

2.4.2.2.1.1 LatencyConstraintTypeEnum==age

When a LatencyTimingConstraint.latencyConstraintType==age and the stimulus and response of the LatencyTimingConstraint.scope reference a TDEventSwcInternalBehavior or TDEventBswInternalBehavior, the LatencyTimingConstraint takes the characteristics of a measurement of the GET and RT of the TDEventSwcInternalBehavior.runnable/TDEventBswInternalBehavior.bswModuleEntity. In other words, the context of the GET and RT is the referenced respective RunnableEntity / BswModuleEntity (after [constr_6906] has been applied).

[TPS_TIMEX_00141] Definition of Gross Execution Time and Response Time ⌈If a

- LatencyTimingConstraint.latencyConstraintType==age and
- LatencyTimingConstraint.scope.stimulus references either a TDEventSwcInternalBehavior or a TDEventBswInternalBehavior and
- LatencyTimingConstraint.scope.response references either a TDEventSwcInternalBehavior or a TDEventBswInternalBehavior

then

Gross Execution Time (GET) : is the total time duration from the start (state="started") of the RunnableEntity/BswModuleEntity transitively referenced in the TimingDescriptionEventChain.stimulus, to the termination (state="suspended") of the RunnableEntity/BswModuleEntity transitively referenced in the TimingDescriptionEventChain.response

Response Time (RT) : is the total time duration from the activation (state="to be started") of the RunnableEntity/BswModuleEntity transitively referenced in the TimingDescriptionEventChain.stimulus, to the termination (state="suspended") of the RunnableEntity/BswModuleEntity transitively referenced in the TimingDescriptionEventChain.response

⌋

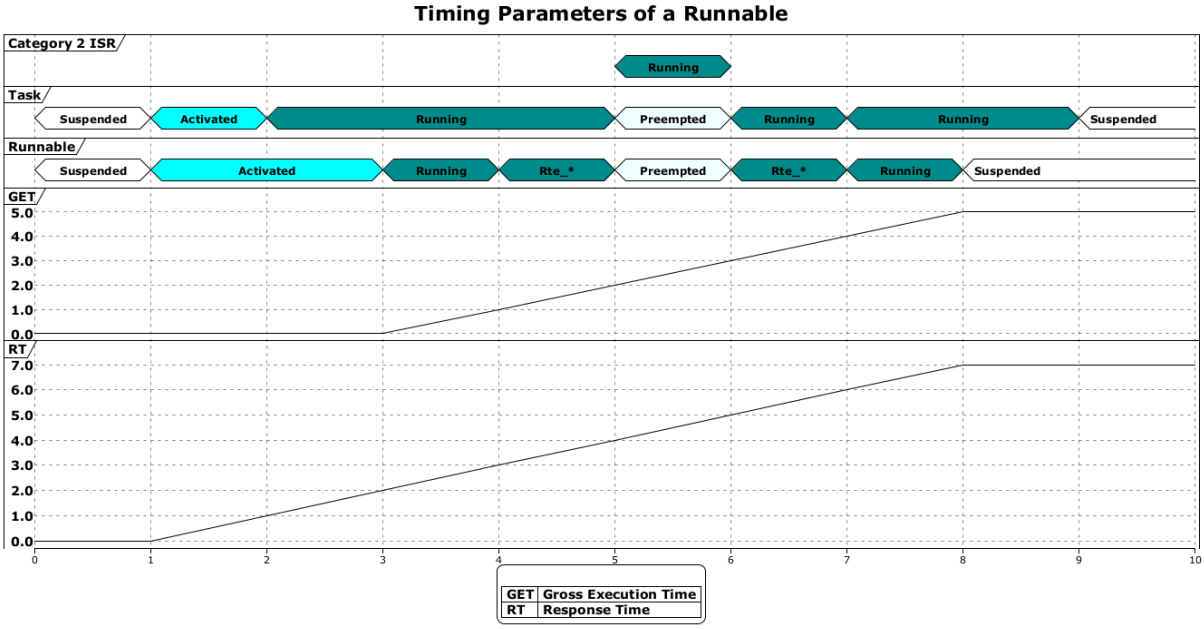

Figure 2.57: Timing diagram GET and RT

Class	**LatencyTimingConstraint**			
Note	Constrains the time duration between the occurrence of the `stimulus` and the occurrence of the corresponding `response` of that `scope`. A causal dependency between the `stimulus` and the corresponding `response` of the `scope` is required.			
Base	*ARObject*, *Identifiable*, *MultilanguageReferrable*, *Referrable*, *TimingConstraint*, *Traceable*			
Aggregated by	*TimingExtension*.timingGuarantee, *TimingExtension*.timingRequirement			
Attribute	***Type***	***Mult.***	***Kind***	***Note***
latency ConstraintType	LatencyConstraintType Enum	0..1	attr	The specific type of this latency constraint.
maximum	MultidimensionalTime	0..1	aggr	The maximum latency between the occurrence of the stimulus and the occurrence of the corresponding response of the associated event chain, i.e. `scope` should not exceed this upper bound **Tags:** atp.Splitkey=maximum xml.sequenceOffset=20
minimum	MultidimensionalTime	0..1	aggr	The minimum latency between the occurrence of the stimulus and the occurrence of the corresponding response of the associated event chain, i.e. `scope` should not precede this lower bound **Tags:** atp.Splitkey=minimum xml.sequenceOffset=10
nominal	MultidimensionalTime	0..1	aggr	The nominal latency between the occurrence of the stimulus and the occurrence of the corresponding response of the associated event chain. **Tags:** atp.Splitkey=nominal xml.sequenceOffset=30
scope	TimingDescriptionEvent Chain	0..1	ref	The event chain that defines the scope of the constraint. **Tags:** atp.Splitkey=scope

Table 2.66: LatencyTimingConstraint

Enumeration	**LatencyConstraintTypeEnum**
Note	Specifies the `latencyConstraintType` for a `LatencyTimingConstraint`.
Aggregated by	LatencyTimingConstraint.latencyConstraintType
Literal	***Description***
age	The `LatencyTimingConstraint` is seen from the perspective of the `response` event of the `scope`. Given a certain `response` event, the age interval of the latest `stimulus` is constrained. **Tags:** atp.EnumerationLiteralIndex=0
reaction	The `LatencyTimingConstraint` is seen from the perspective of the `stimulus` event of the `scope`. Given a certain `stimulus` event, the reaction interval of the first `response` is constrained. **Tags:** atp.EnumerationLiteralIndex=1

Table 2.67: LatencyConstraintTypeEnum

An example model of the measurement of GET and RT is shown here:

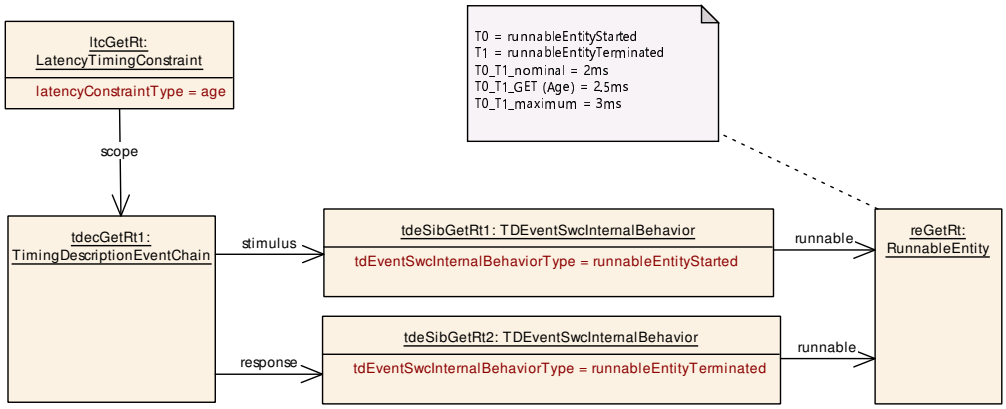

Figure 2.58: Example model of the measurement of GET of a `RunnableEntity`

[constr_6932] Affinity of `RunnableEntity` in GET/RT

Imposition time: `IT_TimingDescriptionReady`

⌈If, after [TPS_TIMEX_00141] is applied, the `LatencyTimingConstraint.scope.stimulus` and `LatencyTimingConstraint.scope.response` reference a `TDEventSwcInternalBehavior` then the same `RunnableEntity` shall be referenced by both.⌋

[constr_6931] Affinity of `BswModuleEntity` in GET/RT

Imposition time: `IT_TimingDescriptionReady`

⌈If, after [TPS_TIMEX_00141] is applied, the `LatencyTimingConstraint.scope.stimulus` and `LatencyTimingConstraint.scope.response` reference a `TDEventBswInternalBehavior` then the same `BswModuleEntity` shall be referenced by both.⌋

[constr_6837] Multiplicity of `LatencyTimingConstraint.latencyConstraintType`

Imposition time: `IT_TimingDescriptionReady`

⌈For each `LatencyTimingConstraint`, the attribute `LatencyTimingConstraint.latencyConstraintType` shall exist⌋

[constr_6838] Multiplicity of `LatencyTimingConstraint.maximum`

Imposition time: `IT_TimingDescriptionReady`

⌈For each `LatencyTimingConstraint`, the attribute `LatencyTimingConstraint.maximum` shall exist⌋

[constr_6839] Multiplicity of `LatencyTimingConstraint.minimum`

Imposition time: `IT_TimingDescriptionReady`

⌈For each `LatencyTimingConstraint`, the attribute `LatencyTimingConstraint.minimum` shall exist⌋

[constr_6841] Multiplicity of `LatencyTimingConstraint.scope`

Imposition time: `IT_TimingDescriptionReady`

⌈For each `LatencyTimingConstraint`, the reference `LatencyTimingConstraint.scope` shall exist⌋

2.4.3 TimingConstraints on ExecutableEntities

TIMEX provides the means to specify constraints on `ExecutableEntity`s around execution order or an execution time etc. In contrast to the constraints on single events or event chains, the approach is a little different and is tied together with the use-cases e.g. 3.1, where several types of constraints are applied depending on the configuration. In this chapter, the general modeling is explained.

2.4.3.1 ExecutionOrderConstraint

An `ExecutionOrderConstraint`[2] can be used in any TIMEX view, as long as the `ExecutableEntity`s and/or the `AbstractEvent`s to be referenced are available in other AUTOSAR models, namely the [6] and [11].

[2]Note: At first glance there may be some similarity between an `ExecutionOrderConstraint` and "Affinity Constraints" in [3], however the focus of `ExecutionOrderConstraint` is to provide a more detailed focus on the timing aspects and less any actual mapping affinity

Class	**ExecutionOrderConstraint**			
Note	This constraint is used to restrict the order of execution for a set of `ExecutableEntity`s. The `ExecutionOrderConstraint` can be used in ANY timing view. The various scopes for `ExecutionOrderConstraint` are described below. Generally, each `ExecutionOrderConstraint` has a scope of software components and can reference all `ExecutableEntity`s available in the corresponding internal behavior (`RunnableEntity` and `BswModuleEntity`) either directly or by the events activating respectively starting them: `RTEEvent` and `BswEvent`. • On VFB level an `ExecutionOrderConstraint` can be specified for `RunnableEntity`s - part of the composition hierarchy referenced by the `VfbTiming`. • On SW-C level an `ExecutionOrderConstraint` can be specified for `RunnableEntity`s - part of the `InternalBehavior` referenced by the `SwcTiming`. • On System level an `ExecutionOrderConstraint` can be specified for `RunnableEntity`s - part of the composition hierarchy of the system referenced by the `SystemTiming`. • On BSW module level, an `ExecutionOrderConstraint` can be specified for `BswModuleEntity`s part of an `BswInternalBehavior` referenced by the `BswModuleTiming`. • On ECU level an `ExecutionOrderConstraint` can be specified for all `ExecutableEntity`s and Events available via the EcucValueCollection, covering ECU Extract and BSW Module Configuration, referenced by the `EcuTiming`. This Class is only used by the AUTOSAR Classic Platform.			
Base	*ARObject*, *Identifiable*, *MultilanguageReferrable*, *Referrable*, *TimingConstraint*, *Traceable*			
Aggregated by	*TimingExtension*.timingGuarantee, *TimingExtension*.timingRequirement			
Attribute	***Type***	***Mult.***	***Kind***	***Note***
executionOrder ConstraintType	ExecutionOrder ConstraintTypeEnum	0..1	attr	Specifies the specific type of ExecutionOrderConstraint.
orderedElement	EOCExecutableEntity RefAbstract	*	aggr	This aggregation represents an unordered collection of references to RunnableEntities which shall be considered in the ExecutionOrderConstraint. The role does not imply that the collection of references itself shall be ordered. **Tags:** atp.Splitkey=orderedElement, ordered Element.shortName

Table 2.68: ExecutionOrderConstraint

Enumeration	**ExecutionOrderConstraintTypeEnum**
Note	Specifies the type of the `executionOrderConstraintType` for a `ExecutionOrderConstraint`. This Enumeration is only used by the AUTOSAR Classic Platform.
Aggregated by	ExecutionOrderConstraint.executionOrderConstraintType
Literal	***Description***
hierarchicalEOC	Specifies that the Execution Order Constraint specifies a hierarchical execution order constraint. **Tags:** atp.EnumerationLiteralIndex=0
ordinaryEOC	Specifies that the Execution Order Constraint specifies an ordinary execution order constraint. **Tags:** atp.EnumerationLiteralIndex=1
repetitiveEOC	Specifies that the Execution Order Constraint specifies a repetitive execution order constraint. **Tags:** atp.EnumerationLiteralIndex=2

Table 2.69: ExecutionOrderConstraintTypeEnum

Class	**EOCExecutableEntityRefAbstract** (abstract)			
Note	Abstract class for referencing atomic ExecutableEntitys and/or composites (EOCExecutableEntityRefGroup). This Class is only used by the AUTOSAR Classic Platform.			
Base	*ARObject*, *Identifiable*, *MultilanguageReferrable*, *Referrable*			
Subclasses	EOCEventRef, EOCExecutableEntityRef, EOCExecutableEntityRefGroup			
Aggregated by	ExecutionOrderConstraint.orderedElement			
Attribute	**Type**	**Mult.**	**Kind**	**Note**
directSuccessor	EOCExecutableEntity RefAbstract	*	ref	The direct successor of an executable entity or a group of executable entities. **Tags:** atp.Splitkey=directSuccessor

Table 2.70: EOCExecutableEntityRefAbstract

Class	**EOCExecutableEntityRefGroup**			
Note	Specifies a group (composite view) of ExecutableEntitys. A EOCExecutableEntityRefGroup may reference further EOCExecutableEntityRefGroups. This Class is only used by the AUTOSAR Classic Platform.			
Base	*ARObject*, *EOCExecutableEntityRefAbstract*, *Identifiable*, *MultilanguageReferrable*, *Referrable*			
Aggregated by	ExecutionOrderConstraint.orderedElement			
Attribute	**Type**	**Mult.**	**Kind**	**Note**
letData Exchange Paradigm	LetDataExchange ParadigmEnum	0..1	attr	Specifies the data exchange paradigm between ExecutableEntitys within a LET interval.
letInterval	TimingDescriptionEvent Chain	*	ref	This association references the TimingDescriptionEvent Chain that plays the role of a LET interval the executable entities in the group are assigned to. [constr_4554] applies. **Tags:** atp.Splitkey=letInterval
maxCycle Repetitions	PositiveInteger	0..1	attr	**Repetitive Execution Order Constraint only:** The number of repetitions (cycles) of the event in the Repetitive Execution Order Constraint.
maxSlotsPer Cycle	PositiveInteger	0..1	attr	**Repetitive Execution Order Constraint only:** The number of ExecutableEntitys (slots) that are executed in a given order within a cycle, for the Repetitive Execution Order Constraint.
nestedElement (ordered)	EOCExecutableEntity RefAbstract	*	ref	This association is used to establish hierarchies of EOCEER Groups and References.
successor	EOCExecutableEntity RefAbstract	*	ref	The logical successor of an executable entity or a group of executable entities. **Tags:** atp.Splitkey=successor
triggeringEvent	TimingDescriptionEvent	0..1	ref	In case of a Repetitive Execution Order Constraint this association references the timing description event triggering every cycle. **Tags:** atp.Splitkey=triggeringEvent

Table 2.71: EOCExecutableEntityRefGroup

Class	EOCExecutableEntityRef			
Note	Defines a reference to a RunnableEntity or BswModuleEntity If the ExecutionOrderConstraint is defined on VFB, System or ECU level, a reference to the component the ExecutableEntity belongs to shall be provided as context. This Class is only used by the AUTOSAR Classic Platform.			
Base	*ARObject*, *EOCExecutableEntityRefAbstract*, *Identifiable*, *MultilanguageReferrable*, *Referrable*			
Aggregated by	ExecutionOrderConstraint.orderedElement			
Attribute	**Type**	**Mult.**	**Kind**	**Note**
bswModule Instance	BswImplementation	0..1	ref	Specifies the BSW module instance the BSW module entity belongs to. **Tags:** atp.Splitkey=bswModuleInstance
component	SwComponent Prototype	0..1	iref	This association references the specific instance of the SW-C prototype. **Tags:** atp.Splitkey=component, component.context Component, component.targetComponent **InstanceRef implemented by:** ComponentIn CompositionInstanceRef
executable	ExecutableEntity	0..1	ref	The ExecutableEntity whose execution order is restricted by the contraint. **Tags:** atp.Splitkey=executable
successor	EOCExecutableEntity RefAbstract	*	ref	The logical successor of an executable entity or a group of executable entities. **Tags:** atp.Splitkey=successor

Table 2.72: EOCExecutableEntityRef

Class	EOCEventRef			
Note	This is used to define a reference to an RTEEvent or BswEvent. This Class is only used by the AUTOSAR Classic Platform.			
Base	*ARObject*, *EOCExecutableEntityRefAbstract*, *Identifiable*, *MultilanguageReferrable*, *Referrable*			
Aggregated by	ExecutionOrderConstraint.orderedElement			
Attribute	**Type**	**Mult.**	**Kind**	**Note**
bswModule Instance	BswImplementation	0..1	ref	Specifies the BSW module instance the BSW event is related to. **Tags:** atp.Splitkey=bswModuleInstance
component	SwComponent Prototype	0..1	iref	This association references the specific instance of the SW-C prototype. **Tags:** atp.Splitkey=component, component.context Component, component.targetComponent **InstanceRef implemented by:** ComponentIn CompositionInstanceRef
event	AbstractEvent	0..1	ref	The AbstractEvent (event) whose execution order is restricted by the contraint. **Tags:** atp.Splitkey=event
successor	EOCExecutableEntity RefAbstract	*	ref	The logical successor of an executable entity or a group of executable entities. **Tags:** atp.Splitkey=successor

Table 2.73: EOCEventRef

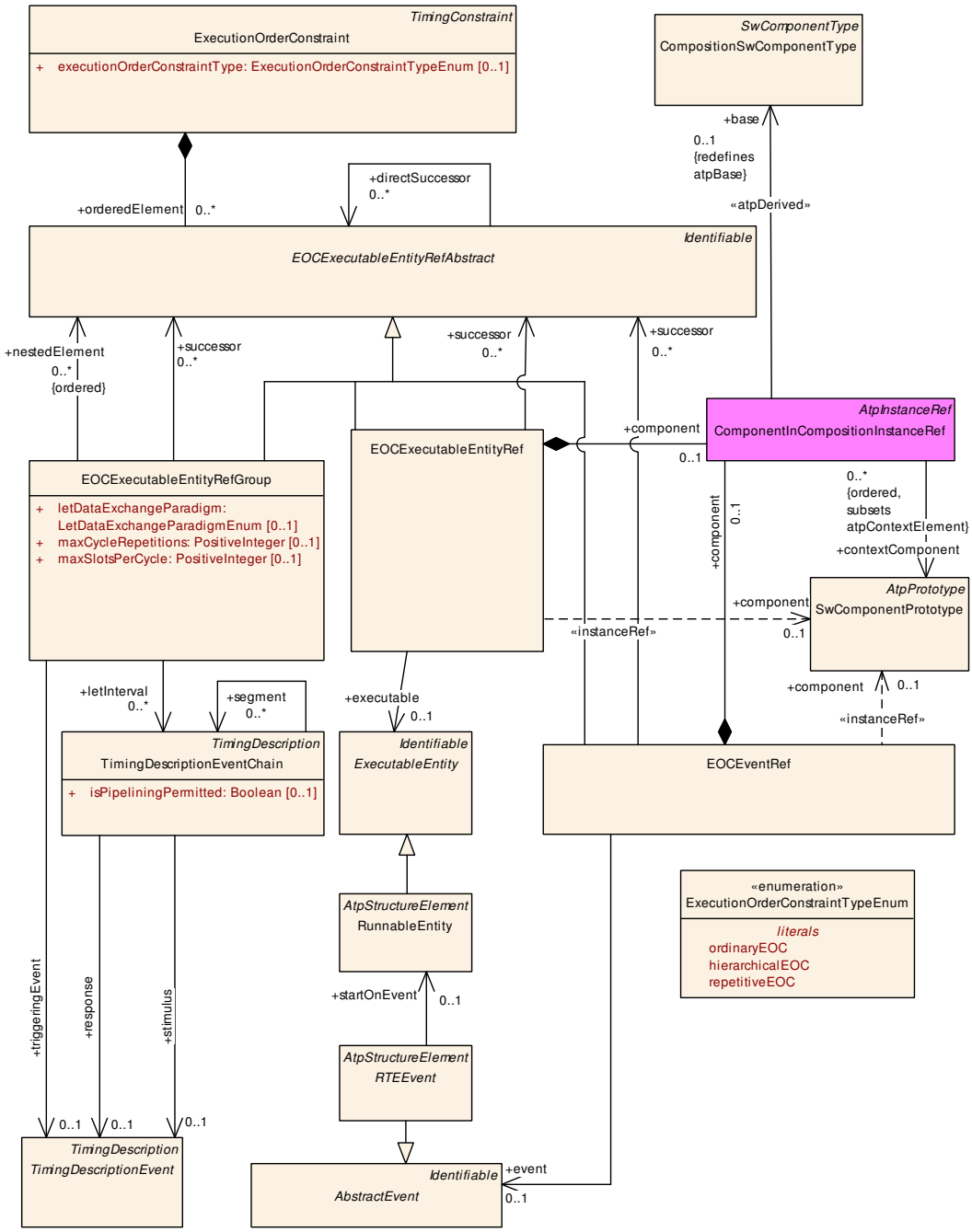

Figure 2.59: `ExecutionOrderConstraint`s on `RunnableEntity`s

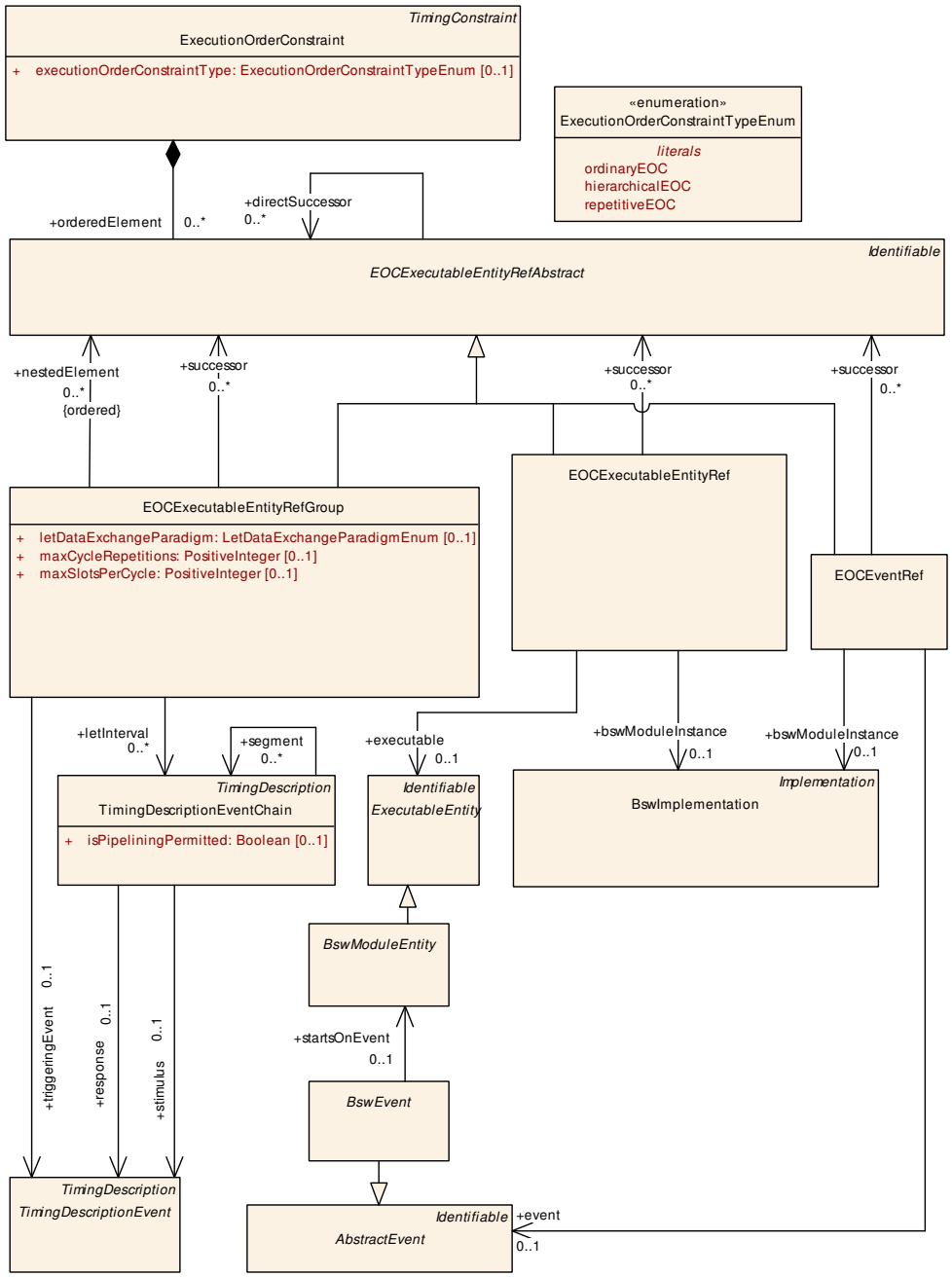

Figure 2.60: `ExecutionOrderConstraint`s on `BswModuleEntity`s

2.4.3.1.1 Precedence and Succeedence

[TPS_TIMEX_00130] Temporal precedence of `ExecutableEntity`s ⌈The temporal precedence of:

- `successor`
- `directSuccessor`

- nestedElement

when used collectively, may be expressed as:
directSuccessor $\prec$ successor $\prec$ nestedElement.⌋

[constr_4532] Successor relationship is not self-referencing

Imposition time: IT_TimingViewReady

⌈The target and source of the successor relationships successor and directSuccessor shall not be the same. In other words an EOCExecutableEntityRef and EOCExecutableEntityRefGroup shall not reference itself as its logical or direct successor.⌋

[constr_4533] Maximum number of successor relationships

Imposition time: IT_TimingViewReady

⌈The maximum number of successor relationships, namely successor or directSuccessor:

- between two EOCExecutableEntityRefs
- between two EOCEventRefs
- between two EOCExecutableEntityRefGroups
- between an EOCExecutableEntityRef and an EOCExecutableEntityRefGroup
- between an EOCEventRef and an EOCExecutableEntityRefGroup

is one (1).⌋

2.4.3.1.2 Executables and Events

Within an ExecutionOrderConstraint, the referenced elements shall be all of the same type, whether referenced directly as an orderedElement, or transitively as part of a EOCExecutableEntityRefGroup.

[constr_6927] Exclusivity of either EOCExecutableEntityRef or EOCEventRef in an ExecutionOrderConstraint

Imposition time: IT_TimingViewReady

⌈In a ExecutionOrderConstraint, in the tree of orderedElements, dual use of EOCEventRef and EOCExecutableEntityRef is not permitted, such that only either:

- EOCEventRef
  - via aggregation ExecutionOrderConstraint.orderedElements
- EOCExecutableEntityRef

- via aggregation ExecutionOrderConstraint.orderedElements
- via reference ExecutionOrderConstraint.EOCExecutableEntityRefGroup.nestedElements

is permitted⌋

[constr_6928] Exclusivity of component and bswModuleInstance in an EOCExecutableEntityRef

Imposition time: IT_TimingDescriptionReady

⌈The instance reference EOCExecutableEntityRef.component and the reference EOCExecutableEntityRef.bswModuleInstance shall not co-exist⌋

[constr_6929] Exclusivity of component and bswModuleInstance in an EOCEventRef

Imposition time: IT_TimingDescriptionReady

⌈The instance reference EOCEventRef.component and the reference EOCEventRef.bswModuleInstance shall not co-exist⌋

[constr_6833] Multiplicity of ExecutionOrderConstraint.orderedElement

Imposition time: IT_TimingDescriptionReady

⌈For each ExecutionOrderConstraint, the attribute orderedElement shall exist at least once⌋

[constr_6834] Multiplicity of EOCExecutableEntityRefGroup.nestedElement

Imposition time: IT_TimingDescriptionReady

⌈For each EOCExecutableEntityRefGroup, the reference in the role nestedElement shall exist at least once⌋

2.4.3.1.3 ExecutionOrderConstraintTypeEnum==ordinaryEOC

A ExecutionOrderConstraint.executionOrderConstraintType==ordinaryEOC is used to specify an order of execution of ExecutableEntitys.

As shown in Figure 2.61 the ExecutionOrderConstraint contains a number of EOCExecutableEntityRefs which reference the ExecutableEntitys the execution order is imposed on. The associations successor and directSuccessor are used to specify the type of successor relationship and enforce the order of execution.

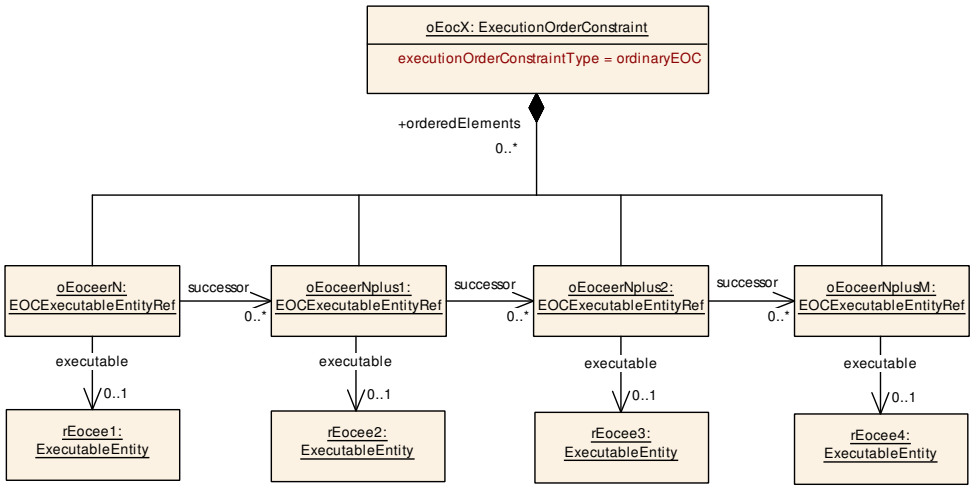

Figure 2.61: Example of an `ExecutionOrderConstraint` of type `ordinaryEOC` referencing `RunnableEntity`s/`BswModuleEntity`s

In Figure 2.62, the `ExecutionOrderConstraint` contains a number of `event` references which refer to the specific `RTEEvent`s/`BswEvent`s the execution order is imposed on.

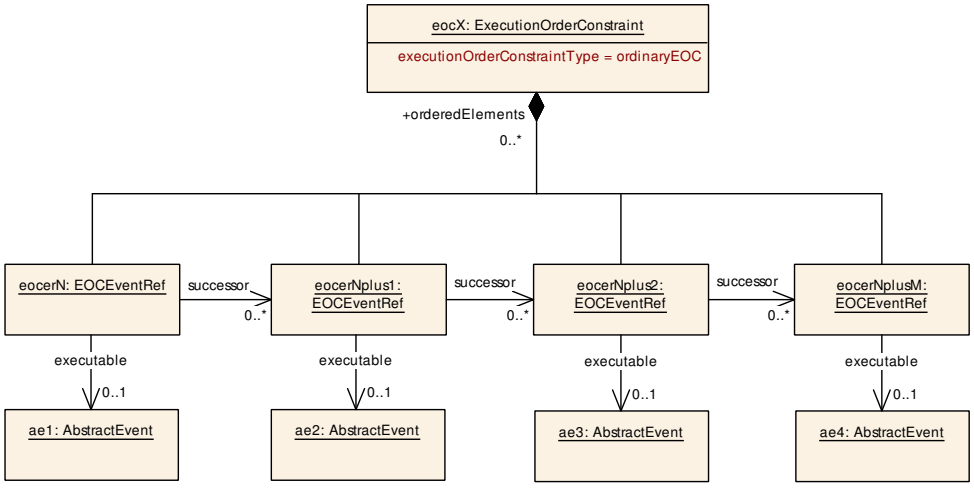

Figure 2.62: Example of an `ExecutionOrderConstraint` of type `ordinaryEOC` referencing `RTEEvent`s/`BswEvent`s

[constr_4541] Multiplicity of `EOCExecutableEntityRef.executable` in an Ordinary Execution Order Constraint

Imposition time: `IT_TimingViewReady`

⌈In an `ExecutionOrderConstraint.executionOrderConstraintType==ordinaryEOC`, in the tree of `orderedElement`s, if the `orderedElement` is a `EOCExecutableEntityRef`, it shall reference an `ExecutableEntity` in the role `executable`.⌋

[constr_4548] Multiplicity of `EOCEventRef.event` in an Ordinary Execution Order Constraint

Imposition time: `IT_TimingViewReady`

⌈In an `ExecutionOrderConstraint.executionOrderConstraintType==ordinaryEOC`, in the tree of `orderedElement`s, if the `orderedElement` is a `EOCEventRef`, it shall reference an `AbstractEvent` in the role `event`.⌋

2.4.3.1.4 `ExecutionOrderConstraintTypeEnum==hierarchicalEOC`

A `ExecutionOrderConstraint.executionOrderConstraintType==hierarchicalEOC` specifies an order of execution of `ExecutableEntity`s using the capability of creating groups of `ExecutableEntity`s. In other words, it enables to specify tree-like structures of `EOCExecutableEntityRefGroup`s, `EOCExecutableEntityRef`s and `EOCEventRef`s.

As shown in Figure 2.63 the `ExecutionOrderConstraint` contains a number of `EOCExecutableEntityRef`s and one `EOCExecutableEntityRefGroup`, which in turn reference a number of `EOCExecutableEntityRef`s. The associations `successor` and `directSuccessor` between these `EOCExecutableEntityRef`s and the `EOCExecutableEntityRefGroup` are used to specify the type of successor relationship and enforce the order of execution.

When creating a `ExecutionOrderConstraint.executionOrderConstraintType==hierarchicalEOC`, it shall be possible to reference already existing `EOCExecutableEntityRef`s in other `EOCExecutableEntityRefGroup`s as part of the hierarchy (bottom up) - such references across differing `ExecutionOrderConstraint` are permitted.

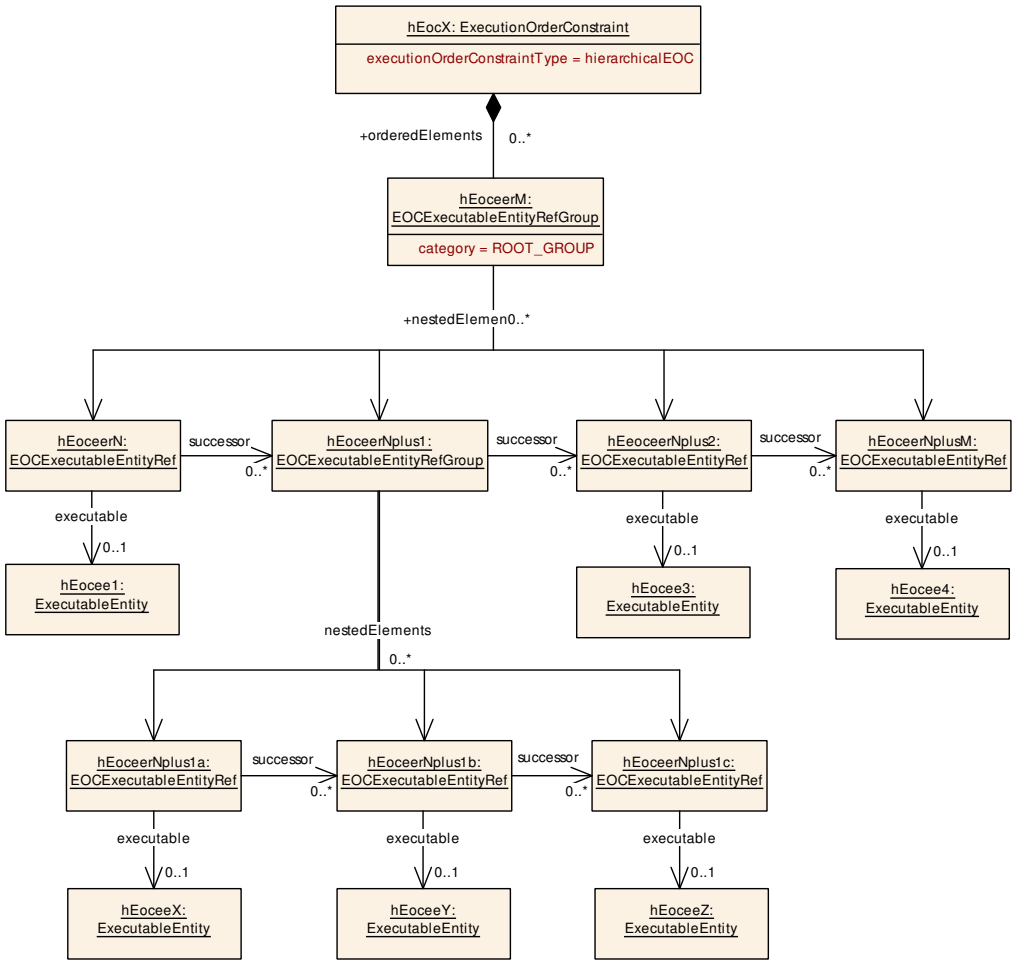

Figure 2.63: Example of a `ExecutionOrderConstraint` of type `hierarchicalEOC`

[TPS_TIMEX_00129] Representation of the root in an Execution Order Constraint
⌈In either:

- `ExecutionOrderConstraint.executionOrderConstraintType==hierarchicalEOC`
- `ExecutionOrderConstraint.executionOrderConstraintType==repetitiveEOC`

the root in the hierarchy shall be the `EOCExecutableEntityRefGroup.category==ROOT_GROUP`.⌋

[constr_6909] Singleton `ROOT_GROUP` in an Execution Order Constraint

Imposition time: `IT_TimingViewReady`

⌈In either:

- `ExecutionOrderConstraint.executionOrderConstraintType==hierarchicalEOC`
- `ExecutionOrderConstraint.executionOrderConstraintType==repetitiveEOC`

in the tree of orderedElements, there shall be only **one** EOCExecutableEntityRefGroup.category==ROOT_GROUP⌋

[constr_6910] Referencing FROM a ROOT_GROUP in an Execution Order Constraint

Imposition time: IT_TimingViewReady

⌈In either:

- ExecutionOrderConstraint.executionOrderConstraintType==hierarchicalEOC
- ExecutionOrderConstraint.executionOrderConstraintType==repetitiveEOC

in the tree of orderedElements, in the singularly identifiable ROOT_GROUP (according to [constr_6909]):

- the successor shall not exist
- the directSuccessor shall not exist

⌋

[constr_6911] Referencing TO a ROOT_GROUP in an Execution Order Constraint

Imposition time: IT_TimingViewReady

⌈In either:

- ExecutionOrderConstraint.executionOrderConstraintType==hierarchicalEOC
- ExecutionOrderConstraint.executionOrderConstraintType==repetitiveEOC

in the tree of orderedElements, the singularly identifiable ROOT_GROUP (according to [constr_6909]) shall not be referenced in the role:

- successor by another EOCExecutableEntityRefGroup
- directSuccessor by another EOCExecutableEntityRefGroup
- nestedElement by another EOCExecutableEntityRefGroup

⌋

[constr_4542] Multiplicity of EOCExecutableEntityRef.executable in a Hierarchical Execution Order Constraint

Imposition time: IT_TimingViewReady

⌈In an ExecutionOrderConstraint.executionOrderConstraintType==hierarchicalEOC, in the tree of orderedElements, if the orderedElement is a EOCExecutableEntityRef, it shall reference an ExecutableEntity in the role executable.⌋

[constr_4549] Multiplicity of `EOCEventRef.event` in a Hierarchical Execution Order Constraint

Imposition time: `IT_TimingViewReady`

⌈In an `ExecutionOrderConstraint.executionOrderConstraintType==hierarchicalEOC`, in the tree of `orderedElement`s, if the `orderedElement` is a `EOCEventRef`, it shall reference an `AbstractEvent` in the role `event`.⌋

2.4.3.1.5 `ExecutionOrderConstraintTypeEnum==repetitiveEOC`

The `ExecutionOrderConstraint.executionOrderConstraintType==repetitiveEOC` is used to specify constrain the ordering of runnables/events based on a repeating deterministic pattern. The occurrences of the specified event are called *cycles* and the order of the `ExecutableEntity`s within a cycle is arranged by *slots*.

The `executionOrderConstraintType==repetitiveEOC` follows the pattern of the Hierarchical Execution Order Constraint, but some restrictions apply to the use and structure of groups of executable entity references. The `ExecutionOrderConstraint` consists of one group of executable entity references, called the *root* group, which references only other groups of executable entity references.

These groups in turn reference executable entity references respectively event references which eventually reference the specific `ExecutableEntity`s respectively events. The *root* group specifies the maximum number of cycles `maxCycleRepetitions` and the maximum number of slots `maxSlotsPerCycle`.

For example:

- if the event $te1$ occurs:
  - the 1st time; the `ExecutableEntity`s: one (1), two (2) and three (3)
  - the 2nd time; the `ExecutableEntity`s: one (1), four (4) and five (5)
  - the 3rd time; the `ExecutableEntity`s: one (1), two (2) and three (3)
  - the 4th time; the `ExecutableEntity`s: one (1), four (4) and five (5)
  - ...
- ...shall be executed in this given order

The `maxCycleRepetitions` specifies the number of subsequent event occurrences after which the execution order constraint repeats, hence the name Repetitive Execution Order Constraint; the `maxSlotsPerCycle` specifies the number of `ExecutableEntity`s that are executed in a given order within a cycle.

The table in Figure 2.74 presents the repetitive execution order constraint sketched in shown in a tabular way.

Cycle	Slot 1	Slot 2	Slot 3
Cycle1	RE1	RE2	RE3
Cycle2	RE1	RE4	RE5
Cycle3	RE7	RE8	RE9
Cycle4	RE1	RE8	RE6

Table 2.74: Example Repetitive Execution Order Constraint

As shown in Figure 2.64 the Repetitive Execution Order Constraints follows a specific pattern.

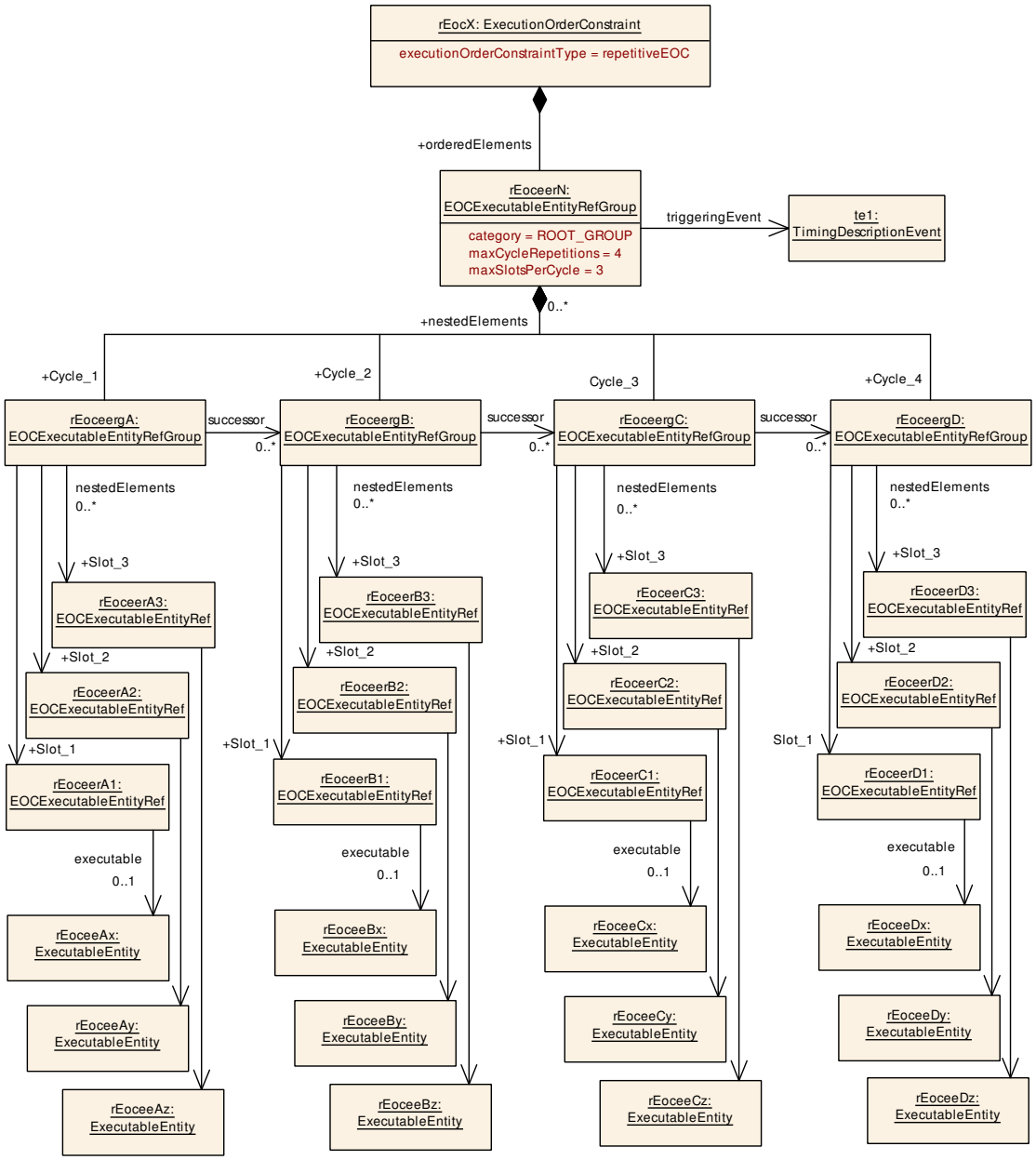

Figure 2.64: Example of a `ExecutionOrderConstraint` of type `repetitiveEOC`

[constr_4523] Restriction of maxCycleRepetitions and maxSlotsPerCycle to Repetitive Execution Order Constraint

Imposition time: IT_TimingViewReady

⌈In a executionOrderConstraintType==repetitiveEOC, the attributes

- EOCExecutableEntityRefGroup.maxCycleRepetitions
- EOCExecutableEntityRefGroup.maxSlotsPerCycle
- EOCExecutableEntityRefGroup.letInterval
- EOCExecutableEntityRefGroup.triggeringEvent

shall exist only if *that* EOCExecutableEntityRefGroup is aggregated by an ExecutionOrderConstraint.executionOrderConstraintType==repetitiveEOC in the role orderedElement and *that* EOCExecutableEntityRefGroup is the singularly identifiable ROOT_GROUP (according to [constr_6909])⌋

[constr_4540] maxCycleRepetitions and maxSlotsPerCycle shall not be zero

Imposition time: IT_TimingViewReady

⌈In a executionOrderConstraintType==repetitiveEOC, the attributes:

- maxCycleRepetitions
- maxSlotsPerCycle

shall be greater than zero (0), (if present).⌋

[constr_4528] The *root* EOCExecutableEntityRefGroup shall reference only EOCExecutableEntityRefGroups

Imposition time: IT_TimingViewReady

⌈In a executionOrderConstraintType==repetitiveEOC, in the tree of orderedElements, in the singularly identifiable ROOT_GROUP (according to [constr_6909]):

- *that* EOCExecutableEntityRefGroup shall only reference EOCExecutableEntityRefGroups in the role nestedElements
- none of those EOCExecutableEntityRefGroups shall be the ROOT_GROUP (according to [constr_6909])

⌋

[constr_4529] Number of nested elements referenced by the *root* EOCExecutableEntityRefGroup

Imposition time: IT_TimingViewReady

⌈In a executionOrderConstraintType==repetitiveEOC, in the tree of orderedElements, in the singularly identifiable ROOT_GROUP (according to [constr_6909]): the number of EOCExecutableEntityRefGroups referenced in the role nestedElements shall be exactly the number given by the attribute maxCycleRepetitions.⌋

[constr_4530] An EOCExecutableEntityRefGroup representing a cycle shall reference only EOCExecutableEntityRefs respectively EOCEventRefs

Imposition time: IT_TimingViewReady

⌈In a executionOrderConstraintType==repetitiveEOC, in the tree of orderedElements, a EOCExecutableEntityRefGroup which is NOT the singularly identifiable ROOT_GROUP (according to [constr_6909]): may not reference a EOCExecutableEntityRefGroup in the role nestedElements⌋

Rationale for [constr_4530]: the depth of the slots in a cycle shall be one (1).

[constr_4531] Number of nested elements referenced by EOCExecutableEntityRefGroup representing a cycle

Imposition time: IT_TimingViewReady

⌈In a executionOrderConstraintType==repetitiveEOC, in the tree of orderedElements, for a EOCExecutableEntityRefGroup which is NOT the singularly identifiable ROOT_GROUP (according to [constr_6909]): the number of nestedElements referenced by that EOCExecutableEntityRefGroup (representing a cycle) shall be exactly the number given by the attribute maxSlotsPerCycle⌋

[constr_6926] Restriction of `successor` and `directSuccessor`

Imposition time: IT_TimingViewReady

⌈In a executionOrderConstraintType==repetitiveEOC, in the tree of orderedElements:

- EOCExecutableEntityRefGroup.directSuccessor
- EOCExecutableEntityRefGroup.successor
- EOCExecutableEntityRef.directSuccessor
- EOCExecutableEntityRef.successor
- EOCEventRef.directSuccessor
- EOCEventRef.successor

shall not exist⌋

Rationale for [constr_6926]: while [constr_6911] covers the ROOT_GROUP, [constr_6926] covers the whole tree.

2.4.3.2 ExecutionTimeConstraint

This section defines the quantitative properties for an ExecutionTimeConstraint. An ExecutionTimeConstraint is essentially a measurement of the Core Execution Time (CET) of a ExecutableEntity. It shall be bounded by specifying a minimum and maximum interval.

When the executable refers to a RunnableEntity, the context must be given via the attribute component. That ComponentInCompositionInstanceRef defines the component instance, which contains the RunnableEntity. If it refers to a BswModuleEntity, the component shall not be present.

2.4.3.2.1 Core Execution Time

CET is a quantitative property of implementation - it represents the actual CPU processing time required by an ExecutableEntity. Because CET ignores scheduling interference, it cannot be used to constrain system-level latency, instead GET and RT should be used.

CET focuses strictly on CPU processing; it must exclude interruptions (such as preemption by higher-priority tasks or ISRs) and any time spent in a waiting state.

Note: The meta-class ResourceConsumption.executionTime offers a similar means can be used to describe the execution time of an ExecutableEntity, but an ExecutionTimeConstraint focuses on a finer tuning of the timing constraints.

[TPS_TIMEX_00140] Definition of Core Execution Time ⌈Core Execution Time ((CET)) may be expressed as either:

exclusive : The CPU time required for an ExecutableEntity's internal logic, EXCLUDING calls to the Runtime Environment (RTE) and Basic Software (BSW) platform APIs (e.g., Rte_Read, Rte_Write, Rte_Call). Time spent executing internal application-level helper functions, compiler intrinsics, or standard library routines (e.g. libc, libm) remains included. This isolates the execution time of the component's implemented logic from the underlying AUTOSAR infrastructural APIs.

inclusive : The total CPU processing time required by an ExecutableEntity, INCLUDING all calls to RTE and BSW platform APIs, internal application-level helper functions, compiler intrinsics, or standard library routines. It represents the total functional time the CPU is dedicated to the ExecutableEntity and its complete execution context, including infrastructural API overhead.

⌋

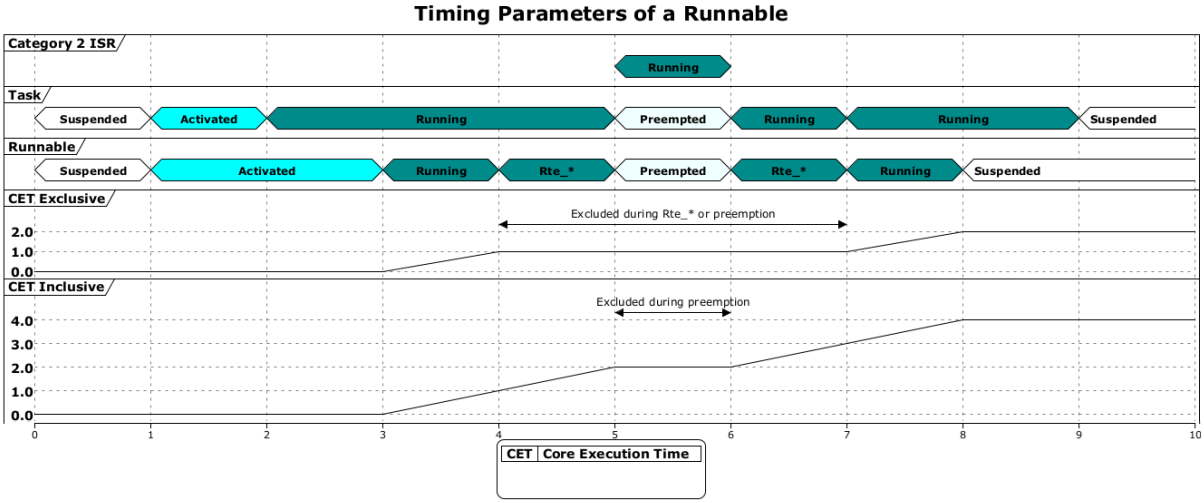

Figure 2.65: Timing diagram CET

Class	**ExecutionTimeConstraint**			
Note	Constrains the execution time of the referenced `executable` in `component` between a `minimum` and `maximum` interval. The time to execute the `executable` including interruptions by other entities and including external calls is commonly called "response time". The TimingExtensions provide the concept of event chains and latency constraints for that purpose. An event chain from the start of the entity to the termination of the entity with according latency constraint represents a response time constraint for that executable entity. This Class is only used by the AUTOSAR Classic Platform.			
Base	*ARObject*, *Identifiable*, *MultilanguageReferrable*, *Referrable*, *TimingConstraint*, *Traceable*			
Aggregated by	*TimingExtension*.timingGuarantee, *TimingExtension*.timingRequirement			
Attribute	***Type***	***Mult.***	***Kind***	***Note***
component	SwComponent Prototype	0..1	iref	The component that containts the referenced Executable Entity for the ExecutionTimeConstraint. If the entity is in a basic software module no component shall be provided. **Tags:** atp.Splitkey=component, component.context Component, component.targetComponent **InstanceRef implemented by:** ComponentIn CompositionInstanceRef
executable	ExecutableEntity	0..1	ref	The referenced ExecutableEntity for the ExecutionTime Constraint. **Tags:** atp.Splitkey=executable
executionTime Type	ExecutionTimeType Enum	0..1	attr	Specifies the type of the execution time constrained by ExecutionTimeConstraint,
maximum	MultidimensionalTime	0..1	aggr	The maximum execution time. **Tags:** atp.Splitkey=maximum
minimum	MultidimensionalTime	0..1	aggr	The minimum execution time. **Tags:** atp.Splitkey=minimum

Table 2.75: ExecutionTimeConstraint

Enumeration	**ExecutionTimeTypeEnum**
Note	Specifies the type of the executionTimeType for a ExecutionTimeConstraint.
Aggregated by	ExecutionTimeConstraint.executionTimeType
Literal	***Description***
gross	Indicates that the given execution time is the time used to execute the executable WITHOUT any interruption and WITH external calls. **Tags:** atp.EnumerationLiteralIndex=0
net	Indicates that the given execution time is the time used to execute the executable WITHOUT any interruption and WITHOUT any external calls. **Tags:** atp.EnumerationLiteralIndex=1

Table 2.76: ExecutionTimeTypeEnum

[constr_6930] Restriction of ExecutionTimeConstraint.component

Imposition time: IT_TimingViewReady

⌈The attribute ExecutionTimeConstraint.component shall exist only if ExecutionTimeConstraint.executable references a RunnableEntity.⌋

[constr_6835] Multiplicity of ExecutionTimeConstraint.executionTimeType

Imposition time: IT_TimingViewReady

⌈For each ExecutionTimeConstraint, the attribute executionTimeType shall exist⌋

[constr_6836] Multiplicity of ExecutionTimeConstraint.executable

Imposition time: IT_TimingViewReady

⌈For each ExecutionTimeConstraint, the reference to ExecutableEntity in the role executable shall exist⌋

3 Methodology

This chapter presents how the modeling aspects in 2 are used in practice to achieve higher-level application of timing.

3.1 Logical Execution Time

Logical Execution Time (LET) is a real-time programming *abstraction*. It abstracts from actual (*physical*) execution time of a real-time program. LET determines the time it takes from reading program input to writing program output regardless of the time it takes to execute the program which processes the input and writes output. LET is motivated by the observation that the relevant behavior of real-time programs is determined by when input is read and output is written and not when programs just execute any code.

This *logical* notion is shown in the upper part of Figure 3.1. At the *release* point input is read and at the *terminate* point output is written. Between these two points — the logical execution time — the program is executed, and writing output is delayed until the logical execution time elapsed even if the program completes execution before the logical execution time elapsed. This is sketched in the lower part of Figure 3.1 and shows the actual *physical* execution of a program.

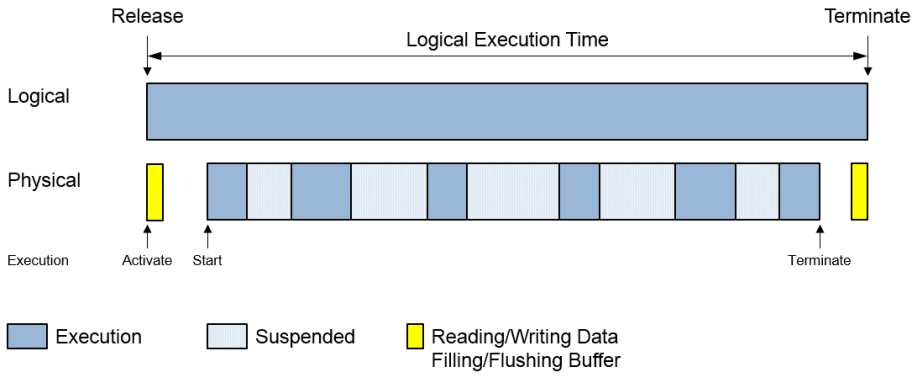

Figure 3.1: LET Interval

3.1.1 LET Interval Definition

Modeling of LET starts with a categorized TimingDescriptionEventChain. The TimingDescriptionEventChain.category==LET_INTERVAL to represent the LET interval span. This TimingDescriptionEventChain shall reference two TDEventComplexs to represent the stimulus and the response points.

The TDEventComplex is used because both the stimulus and response are not referencing an *observable* location, like the other types of TimingDescriptionEvents. A TDEventOccurrenceExpression on the TDEventComplex is used to specify the particular TimingDescriptionEvent supposed to occur in case of the release and terminate point respectively.

[TPS_TIMEX_00057] Representation of an LET interval in a TimingDescriptionEventChain ⌈An LET Interval shall be described by a TimingDescriptionEventChain.category==LET_INTERVAL⌋

[TPS_TIMEX_00112] Representation of an LET interval release ⌈An LET Interval release shall be described by stimulus referencing a TDEventComplex.category==LET_RELEASE⌋

[TPS_TIMEX_00113] Representation of an LET interval terminate ⌈An LET Interval terminate shall be described by response referencing a TDEventComplex.category==LET_TERMINATE⌋

After defining the stimulus and response events, the timing related parameters of the an LET interval are specified using TimingConstraints. A LatencyTimingConstraint specifies the **duration** and a PeriodicEventTriggering specifies the **recurrence** of an LET interval.

[TPS_TIMEX_00121] Representation of the duration of an LET interval ⌈The **duration** of an LET interval shall be described by a LatencyTimingConstraint where:

- latencyConstraintType==reaction
- maximum shall specify the **duration** semantics.

⌋

[TPS_TIMEX_00117] Representation of the recurrence of an LET interval ⌈The **recurrence** of an LET interval shall be described by a PeriodicEventTriggering referencing a TimingDescriptionEvent in the role event.⌋

For LET, when expressing the duration semantics, only the maximum is needed, therefore the minimum shall be omitted from modeling.

[constr_6920] Multiplicity of LatencyTimingConstraint.minimum used in an LET interval

Imposition time: IT_TimingViewReady

⌈For a LatencyTimingConstraint with:

- latencyConstraintType==reaction
- scope.category==LET_INTERVAL

the attribute minimum shall not exist.⌋

It is only necessary to have a This PeriodicEventTriggering constraint shall be imposed on the stimulus event (the release point of the LET interval) of the timing description event chain representing a LET interval.

[TPS_TIMEX_00122] Application of a PeriodicEventTriggering constraint used to specify the *recurrence* of an LET interval ⌈For a PeriodicEventTriggering constraint used to configure the *recurrence* semantics of an LET interval, the reference event shall refer to the TDEventComplex used in the role TimingDescriptionEventChain.stimulus.⌋

[constr_6912] Mandatory specification of LET interval recurrence

Imposition time: IT_TimingViewReady

⌈For a TDEventComplex.category==LET_RELEASE, there shall exist a PeriodicEventTriggering referencing it (*that* same TDEventComplex) in the role event⌋

Figure 3.2 shows an example LET model with ARXML listings C.2, C.3, C.4.

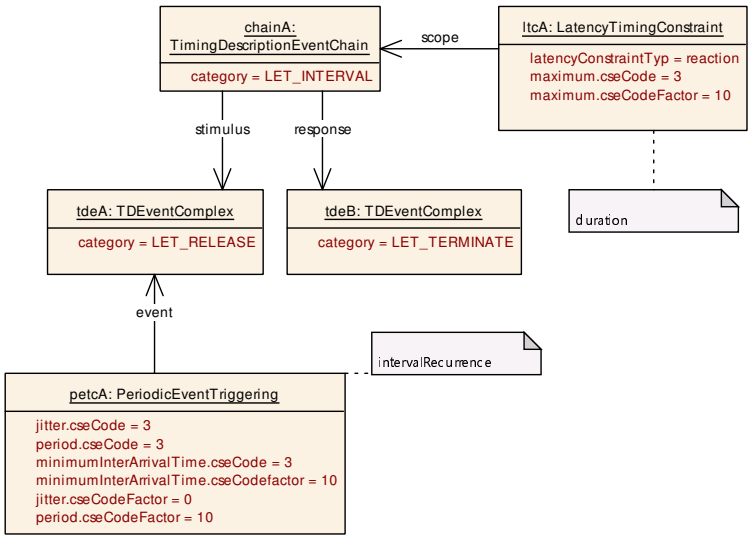

Figure 3.2: LET Interval Model

3.1.2 Relation between LET Intervals

This section describes the most prominent cases for describing LET intervals and possible relationships among them. These cases are frequently occurring in developing systems. The section describes various ways to use the AUTOSAR elements PeriodicEventTriggering and OffsetTimingConstraint to specify the duration of LET intervals and offsets between LET intervals. Offsets between LET intervals result in overlapping LET intervals or LET intervals in subsequent order with and without gaps between each other.

In Figure 3.3 a periodic LET interval is specified. The LET interval is periodically repeated and the value of the LET interval is the same as the period.

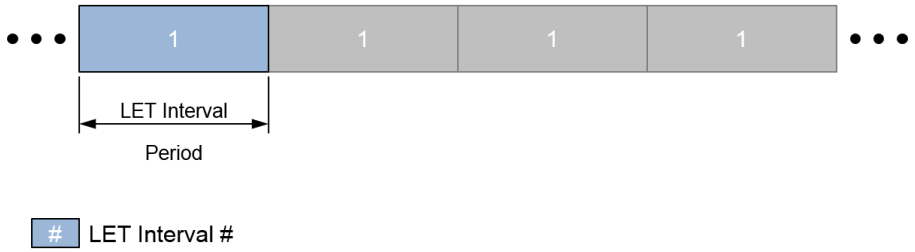

Figure 3.3: Specifying Periodic LET Interval

The corresponding ARXML fragments that describe this pattern are shown in listing C.2, C.3 and C.4. The first listing presents an ARXML fragment that specifies the LET interval; the second listing presents an ARXML fragment that specifies the duration of the LET interval; and the third listing presents an ARXML fragment that specifies the recurrence of the LET interval.

In Figure 3.4 a periodic LET interval is specified, but the value of the period is larger than the LET interval. This results in a gap between the *terminate* point of the LET interval and the next *release* point of the LET interval. The corresponding ARXML fragment is shown in listing C.5. The first part of the ARXML fragments specifies the duration of the LET interval which is 6ms by using the latency timing constraint `LatencyTimingConstraint`. The second part specifies the recurrence of the LET interval which is 10ms by using the periodic event triggering constraint `PeriodicEventTriggering`.

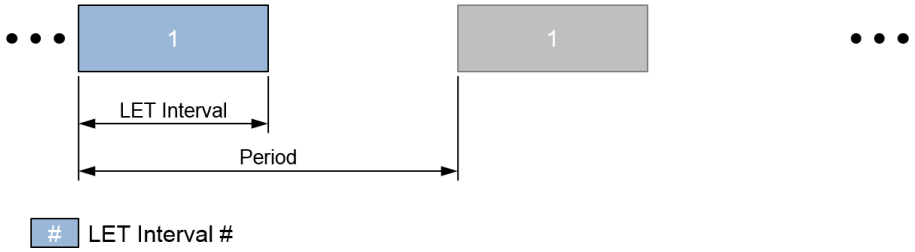

Figure 3.4: Specifying Periodic LET Interval with Gap

In Figure 3.5 three LET intervals are specified. The duration of the first LET interval 1 is 2.5ms, the duration of the second LET interval 2 is 5ms, and the duration of the third LET interval 3 is 10ms. The very first release of each LET interval takes place at the same point in time and then each of the LET intervals is repeated periodically. This case is modeled using the Offset Timing Constraint `OffsetTimingConstraint` and the offset between the *release* points of those LET intervals is 0ms, namely no offset.

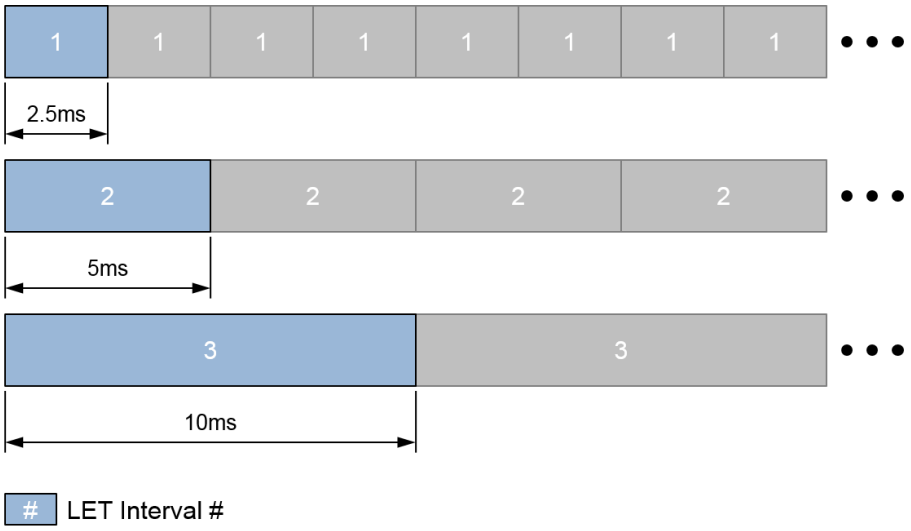

Figure 3.5: Specifying Relationship between Periodic LET Intervals

The listing C.6 shows an ARXML fragment which specifies two offset timing constraints between the *release* point of LET interval 1 and the two *release* points of the LET interval 2 and LET interval 3. In both cases the offset is zero (0ms) specifying that all LET intervals are released at the same point in time.

In Figure 3.6 three LET intervals are specified. The duration of the first LET interval 1 is 2.5ms, the duration of the second LET interval 2 is 5ms, and the duration of the third LET interval 3 is 10ms. The very first release of each LET interval takes place at different points in time and then each LET interval is repeated periodically . This case is modeled using the Offset Timing Constraint `OffsetTimingConstraint`. The offset between the *release* points of the first LET interval 1 and second LET interval 2 is 2.5ms; and the offset between the *release* points of the first LET interval 1 and third LET interval 3 is 7.5ms.

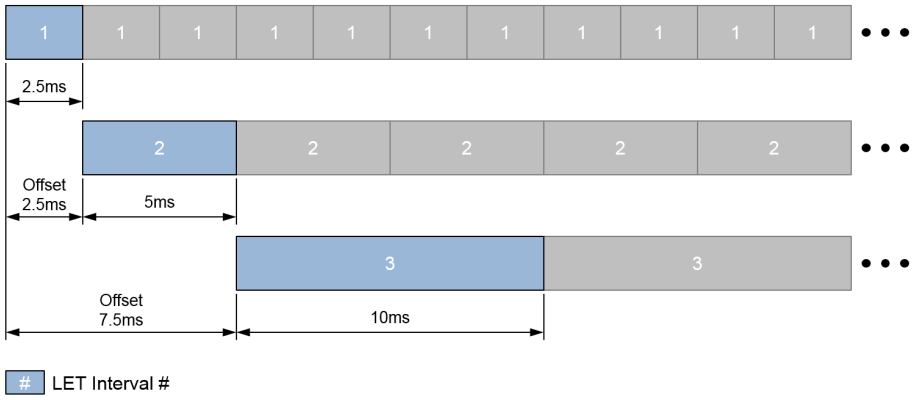

Figure 3.6: Specifying Relationship between Periodic LET Intervals With Offsets

The listing C.7 shows an ARXML fragment which specifies two offset timing constraints between the *release* point of LET interval 1 and the two *release* points of the LET

interval 2 and LET interval 3. In the first case the offset between the *release* points of LET interval 1 and LET interval 2 is 2.5ms; and in the second case the offset between the *release* points of LET interval 1 and LET interval 3 is 7.5ms.

In Figure 3.7 four LET intervals are specified. The first LET interval 1 terminates before the second LET interval 2 is released; the second LET interval 2 terminates before the third LET interval 3 is released; and the third LET interval 3 terminates before the fourth LET interval is released. After the last, the fourth LET interval 4 terminates, the same sequence of LET intervals is repeated. This case is modeled using the Offset Timing Constraint `OffsetTimingConstraint` to specify the offsets between the *release* point of the first LET interval 1 and the *release* points of each LET interval 2 through 4. The duration of each LET interval is listed in Table 3.1 along with the corresponding offsets between the *release* points of the LET intervals.

The periodic event triggering constraint `PeriodicEventTriggering` is used to specify that the period of the sequence is 32ms.

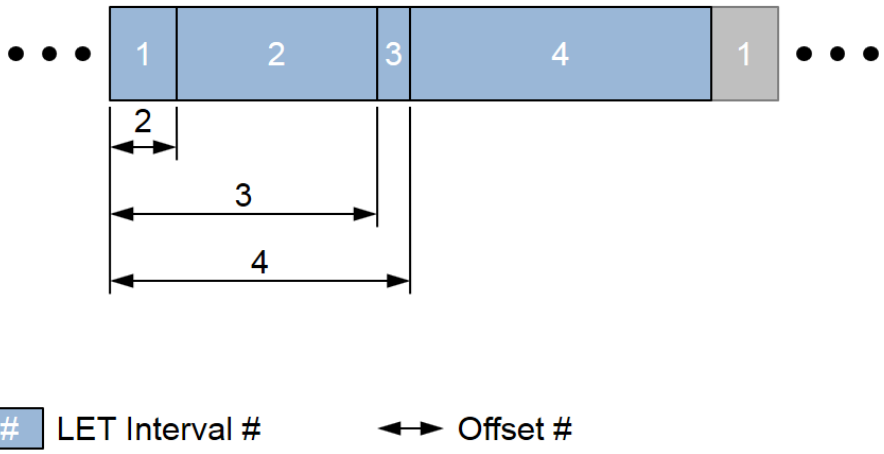

Figure 3.7: Specifying Arbitrary LET Intervals

Table 3.1 summarizes the duration of the LET intervals and the offsets between the release point of the LET interval 1 and the release points of the LET intervals 2 through 4 as shown in Figure 3.7.

LET Interval	Length	Offset
1	2ms	No offset
2	6ms	2ms
3	1ms	8ms
4	9ms	9ms

Table 3.1: Specifying Arbitrary LET Intervals

The listing C.8 shows an ARXML fragment which specifies the three offsets between the *release* point of the first LET interval 1 and the *release* points of the three LET intervals 2 through 4.

In Figure 3.8 a similar case as described in Figure 3.7 is shown but the offset between some LET intervals and the duration of some LET intervals are different which result in some gaps between LET intervals. The duration of each LET interval and the offsets between the LET intervals of this case are listed in Table 3.2 along with the corresponding offsets between the *release* points of the LET intervals.

Like in the previous example the periodic event triggering constraint `PeriodicEventTriggering` is used to specify that the period of the sequence is 32ms.

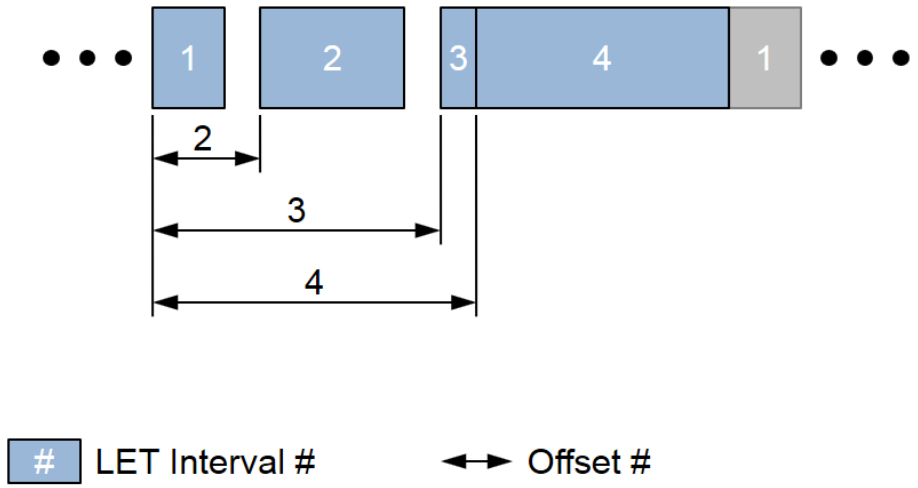

Figure 3.8: Specifying Arbitrary LET Intervals with Gaps

Table 3.2 summarizes the duration of the LET intervals and the offsets between the release point of the LET interval 1 and the release points of the LET intervals 2 through 4 as shown in Figure 3.8.

LET Interval	Length	Offset
1	2ms	No offset
2	4ms	3ms
3	1ms	8ms
4	7ms	9ms

Table 3.2: Specifying Arbitrary LET Intervals with Gaps

The ARXML fragment of this example is the same as shown in listing C.8 except the values of the offset timing constraints, and the latency timing constraints, which specify the duration of the four LET intervals.

Considering the development of systems consisting of several electronic control units, each of them most likely equipped with multiple processors, as well as processors containing several independent execution units, also know as *cores*, there is the necessity to be able specify LET intervals supporting the parallel execution of executable entities.

In Figure 3.9 four LET intervals are specified which overlap. The LET interval 3 and LET interval 4 are overlapping each other and overlapping LET interval 1 and LET interval 2, too.

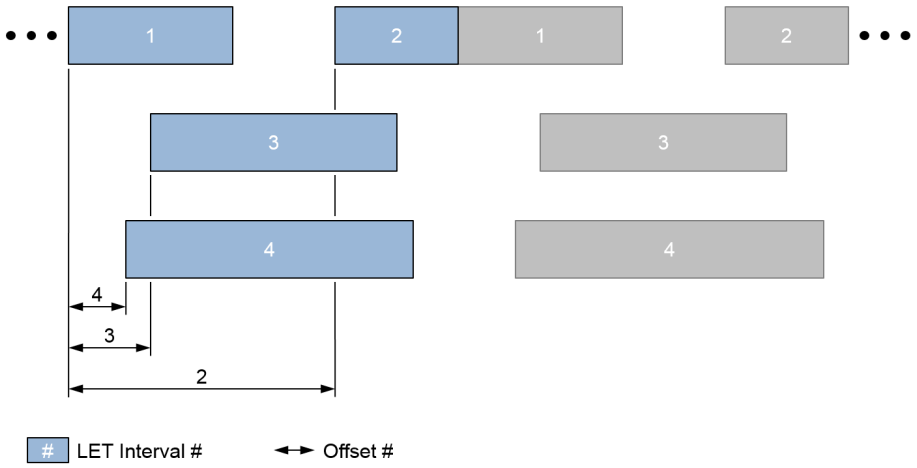

Figure 3.9: Specifying Arbitrary LET Intervals with Overlap

Table 3.3 summarizes the duration of the LET intervals and the offsets between the release point of the LET interval 1 and the release points of the LET intervals 2 through 4 as shown in Figure 3.9.

LET Interval	Length	Offset
1	8ms	No offset
2	6ms	13ms
3	12ms	4ms
4	14ms	3ms

Table 3.3: Specifying Arbitrary LET Intervals with Overlap

The periodic event triggering constraint `PeriodicEventTriggering` is used to specify that the period of the sequence is 19ms.

The listing C.9 shows an ARXML fragment which specifies three offset timing constraints between the *release* point of LET interval 1 and the three *release* points of the LET interval 2 through LET interval 4. The values of the offsets are selected such that LET interval 3 and LET interval 4 are overlapping the LET interval 1 and LET interval 2. The offset between the *release* points of LET interval 1 and LET interval 2 is 13ms; the offset between the *release* point of LET interval 1 and LET interval 3 is 4ms; and the offset between the *release* point of LET interval 1 and LET interval 4 is 3ms.

3.1.3 Executable Entity Cluster to LET Interval mapping

During the development of distributed real-time systems there is frequently the case to be capable of grouping executable entities for various purposes, like scheduling, mapping a number of executable entities to LET intervals, or specifying other constraint that are imposed on a group of executable entities.

The capability of the execution order constraint `ExecutionOrderConstraint` to group executable entities — references to the RTE or BSW events of those executable

entities — is used to specify clusters of executable entities. In particular, an execution order constraint executable entity reference group EOCExecutableEntityRefGroup (EOCEERG) is used to reference all RTE and/or BSW events of the executable entities that are part of an *executable entities cluster* and in turn an execution order constraint executable entity reference group can reference other groups of executable entities to form a hierarchy of executable entities clusters.

The term *Executable Entities Cluster* is a synonym for EOCExecutableEntityRefGroup — also known as *group of executable entities*. An executable entities cluster is mapped to a LET interval using the attribute letInterval.

As an example, assume there are 8 x AtomicSwComponentTypes: $Swc01$ .. $Swc08$. Each of these SWCs has an internalBehavior $ib_Swc0\#$ where the number sign indicates one of the SWCs $Swc01$ .. $Swc08$. Each SWC has 1 x RunnableEntity called $re_re01_Swc0\#$ and a Timing Event called $te_re01_Swc0\#$ is specified and references the corresponding RunnableEntity in the SWC.

The RunnableEntitys have data read and data write access points which read data from the ports of the particular SWC and write data to the provided ports of the particular SWC. The data dependency graph among the RunnableEntitys is shown in Figure 3.10. For this example three executable entities clusters are defined: The first executable entities cluster consists of the runnable entities re_re01_Swc01, re_re01_Swc02 and re_re01_Swc04; the second one consists of the runnable entities re_re01_Swc03 and re_re01_Swc07; and the third executable entities cluster consists of the runnable entities re_re01_Swc05, re_re01_Swc06 and re_re01_Swc08. Three LET intervals are defined in the example and are called $LETinterval1$, $LETinterval2$ and $LETinterval3$. The first executable entities cluster is mapped to the first LET interval using the association called letInterval between the element EOCExecutableEntityRefGroup and the element TimingDescriptionEventChain.

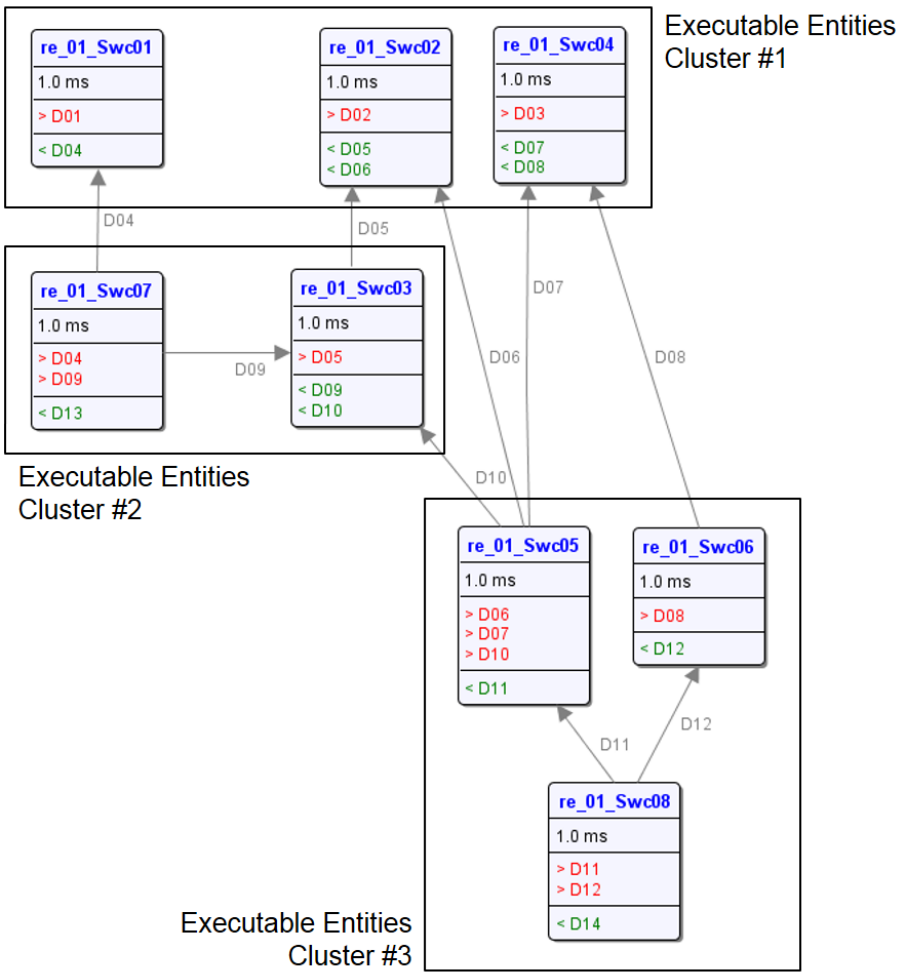

Figure 3.10: Data Dependencies among Executable Entities

The listing C.10 shows an ARXML fragment which specifies that an executable entities cluster and that it is mapped to the $LETinterval1$.

An executable entities cluster is mapped to a LET interval by letting the `EOCExecutableEntityRefGroup` reference the timing description event chain that plays the role of a LET interval.

[constr_4554] Restriction of the referenced `TimingDescriptionEventChain` for a `letInterval`

Imposition time: `IT_TimingViewReady`

⌈The element `EOCExecutableEntityRefGroup.letInterval` shall be present only in a `ROOT_GROUP` (according to [constr_6909])⌋

[constr_6913] Restriction on `RTEEvent`s used in an LET interval

Imposition time: `IT_TimingViewReady`

⌈An `EOCExecutableEntityRefGroup` which references a `TimingDescriptionEventChain.category==LET_INTERVAL` in the role `letInterval` **and** transitively

references an EOCEventRef in the role successor **or** references an EOCEventRef in the role nestedElement, those EOCEventRefs shall reference either:

- TimingEvent in the role event or
- BswTimingEvent in the role event

⌋

3.1.4 Data flow within an LET Interval

The release and terminate event of a letInterval define when input data is expected to be read and output data to be written. This provides a unique data flow for data exchange between ExecutableEntitys that are part of EOCExecutableEntityRefGroups which reference different LET intervals.

For all ExecutableEntitys in EOCExecutableEntityRefGroups that relate to a single letInterval, two paradigms are possible of how data is exchanged **within** an letInterval are possible - in Figure 3.11.

Enumeration	**LetDataExchangeParadigmEnum**
Note	Specifies the data exchange paradigm between ExecutableEntitys within a LET interval. This Enumeration is only used by the AUTOSAR Classic Platform.
Aggregated by	EOCExecutableEntityRefGroup.letDataExchangeParadigm
Literal	***Description***
interLetOnly	All ExecutableEntitys mapped to this LET interval exchange data ONLY at the release and terminate event of the LET interval. This allows for a straightforward translation of the required label buffering but results in longer end-to-end latencies (multiple of the period). The execution order of ExecutableEntitys within the LET interval does not affect the data flow. **Tags:** atp.EnumerationLiteralIndex=0
intraLetEOC	The ExecutableEntitys that belong to the same EOCExecutableEntityRefGroup and are mapped to this LET interval are executed in the order defined by the EOCExecutableEntityRefGroup and exchange data directly within this LET interval according to implicit semantics. Only at the borders of the LET interval or between independent EOCExecutableEntityRefGroups, is data propagated according to the LET paradigm. **Tags:** atp.EnumerationLiteralIndex=1

Table 3.4: LetDataExchangeParadigmEnum

[TPS_TIMEX_00128] Default letDataExchangeParadigm ⌈The default letDataExchangeParadigm=intraLetEOC.⌋

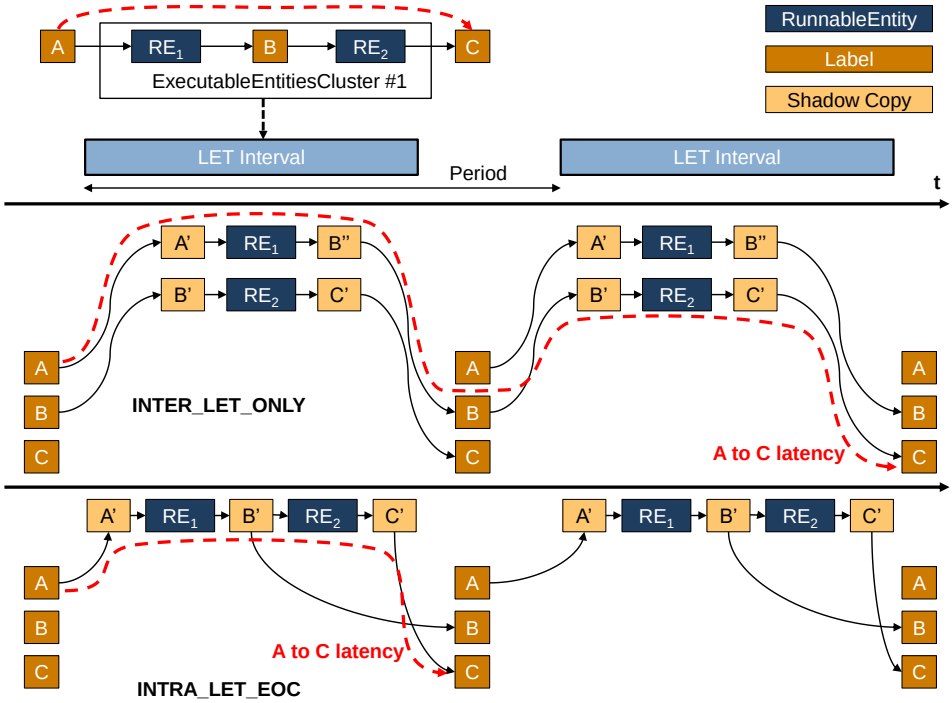

Figure 3.11: Data exchange paradigms within an LET interval

The `letDataExchangeParadigm` shall only apply to `EOCExecutableEntityRefGroup`s used in the context of an LET interval and shall therefore be constrained to reflect that.

[constr_6908] Restriction of `EOCExecutableEntityRefGroup.letDataExchangeParadigm`

Imposition time: `IT_TimingViewReady`

⌈The attribute `letDataExchangeParadigm` shall exist only if the `letInterval` in the same same `EOCExecutableEntityRefGroup` references a `TimingDescriptionEventChain.category==LET_INTERVAL`⌋

3.2 System Level Logical Execution Time

System Level Logical Execution Time (SL-LET) builds upon the concept of Logical Execution Time but targets a system-level view, e.g. between ports on (heterogenous) CP ECUs and/or AP Machines [12].

While the scope of LET in AUTOSAR is to specify a time interval for the execution of runnable entities (and therefore CP only) on a local ECU, SL-LET:

- addresses the data flow on arbitrary ports (e.g., ports of functional blocks, SWCs, services) and allows to specify latencies (resp. SL-LET interval durations) larger than the period,
- allows to incorporate distributed communication by explicitly addressing distributed clocks that have a bounded synchronization accuracy,
- can be applied already on the functional level and decomposed throughout the development process.

The assumption of instantaneous SL-LET events for read and write actions implies that those actions take place in logically zero time. A correct implementation of SL-LET must preserve the data flow semantics of the SL-LET model.

3.2.1 SL-LET Interval Definition

Modeling of SL-LET starts with a categorized TimingDescriptionEventChain.

[TPS_TIMEX_00125] Representation of an SL-LET interval in a TimingDescriptionEventChain ⌈An SL-LET Interval shall be described by a TimingDescriptionEventChain.category==SL_LET_INTERVAL⌋

The TimingDescriptionEventChain.category==SL_LET_INTERVAL shall reference two TimingDescriptionEvents to represent the stimulus and the response.

[TPS_TIMEX_00115] Representation of an SL-LET interval release ⌈An SL-LET Interval release shall be described by stimulus referencing a TDEventVfb⌋

[TPS_TIMEX_00116] Representation of an SL-LET interval terminate ⌈An SL-LET Interval terminate shall be described by response referencing a TDEventVfb⌋

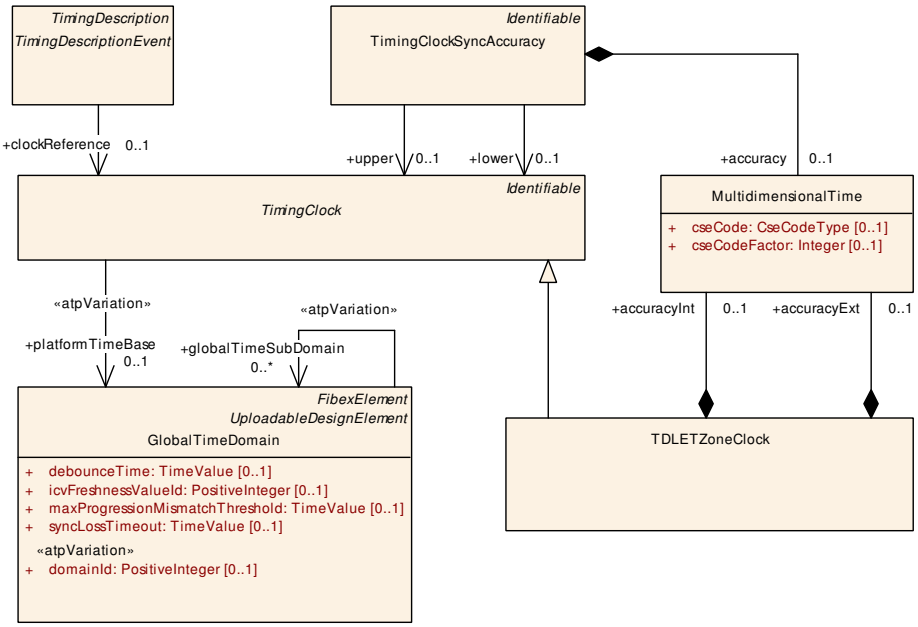

Figure 3.12: TDLETZoneClock and TimingClockSyncAccuracy

The attribute `TimingDescriptionEventChain.isPipeliningPermitted` is provided to specify whether the `TimingDescriptionEventChain.category==SL_LET_INTERVAL` **must** use a pipelined execution or not [12].

[constr_6816] Restricted usage of `TimingDescriptionEventChain.isPipeliningPermitted` in `TimingDescriptionEventChain`

Imposition time: `IT_TimingViewReady`

⌈The attribute `isPipeliningPermitted` shall only exist if the `TimingDescriptionEventChain.category==SL_LET_INTERVAL`.⌋

A `TimingDescriptionEvent` used in this context may reference an optional `TimingDescriptionEvent.clockReference` (3.2.2) but shall be locked out for other contexts other than SL-LET.

[constr_6817] Restricted usage of `TimingDescriptionEvent.clockReference`

Imposition time: `IT_TimingViewReady`

⌈The reference `TimingDescriptionEvent.clockReference` shall exist if (and only if), the `TimingDescriptionEvent` is itself referenced:

- in the role `stimulus` or
- in the role `response`

by a `TimingDescriptionEventChain.category==SL_LET_INTERVAL`⌋

The listing in C.12 shows an ARXML which specifies the timing description event chain and timing description events. Pictorially, figure 3.13 shows a simplified model of an SL-LET interval.

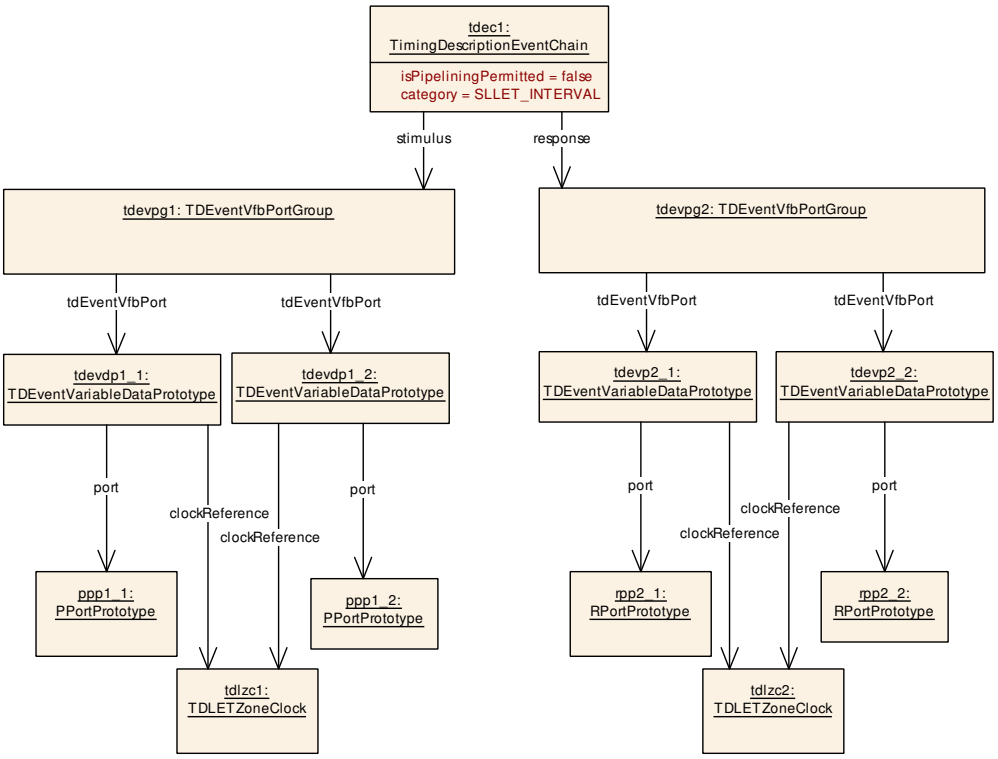

Figure 3.13: SL-LET Interval Model

The timing parameters of an SL-LET interval are specified in the same fashion as an LET interval and shall be specified according to the explanation in 3.1.1. Example ARXMLs are shown in C.12 (duration) and C.12 (recurrence).

3.2.1.1 Execution Order

Figure 3.14 shows an example regarding *execution order*. The release and terminate event of the SL-LET interval $SLLET_1$ is related to the required port of $Swc01$ and the provided port of $Swc02$. This implies the execution order $R_1 \rightarrow R_2 \rightarrow R_3$ for the runnable entities. The example is platform agnostic.

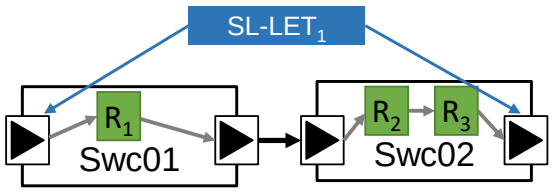

Figure 3.14: Execution order with SL-LET events

3.2.2 SL-LET Time Zones

(LET Zones) are an extension within the domain of SL-LET. The background is that timing description events in a timing event chain *may* have actual different physical

time bases (LET Zone Clocks) and therefore need to reference those LET Zone Clocks discretely to determine synchronization accuracy for a SL-LET interval.

In a deployment view LET Zone Clocks may be structured in a tree-based hierarchy. As the tree is descended from a high-level to a low-level view, thus the time bases (LET Zone Clock)s move from a logical high-level e.g. vehicle-level to a e.g. logical low-level sensor/actuator-level.

Figure 3.15 shows a graphical example of these concepts. In this example 3 LET-zones are used to represent the hierarchy, in principal any number of LET Zones could be possible but the synchronization accuracy is always between the upper and lower LET zones (timing description event end points).

A LET-zone called TZ_A is represented by a TDLETZoneClock. By referencing the corresponding TimingClocks within the TimingDescriptionEvents, a SL-LET interval can either be specified between the LET zones TZ_1 and TZ_2 or on a higher hierarchical level with respect to LET zone TZ_0.

The LET-zone TZ_B is a lower LET-zone of TZ_A, if there exists a TimingClock-SyncAccuracy.upper referring to a TDLETZoneClock A and a lower pointing to TDLETZoneClock B. This definition can be applied recursively, so if TZ_C is a lower LET-zone of TZ_B and TZ_B is a lower LET-zone of TZ_A, then TZ_C is also a lower LET-zone of TZ_A.

The internal synchronization accuracy requirement $\epsilon_{0,int}$ (attribute accuracyInt of TDLETZoneClock) is therefore used as a wrapper to abstract lower LET-zones of TZ_0.

Different LET zone clocks (which can be specified by TDLETZoneClock) are synchronized in a hierarchical manner. This relation can be specified by the element TimingClockSyncAccuracy. Figure 3.12 shows the relation between the elements.

The corresponding ARXML specification is shown in listing C.12.

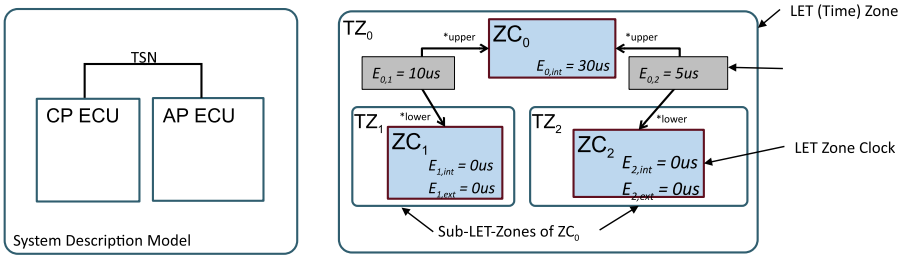

Figure 3.15: Exemplary definition of three LET Zones within a vehicle

In Figure 3.15, the internal synchronization accuracy requirement of $\epsilon_{0,int} = 30\mu s$, which is given as an attribute of TDLETZoneClock, is fulfilled, since the worst-case between any two lower LET-zones of TZ_0 is $\epsilon_{1,ext} + \epsilon_{0,1} + \epsilon_{0,2} + \epsilon_{2,ext} = 0\mu s + 10\mu s + 5\mu s + 0\mu s = 15\mu s \leq 30\mu s$.

Figure 3.16 shows an example when the LET zone TZ_2 shall include further lower LET zones. At the end, the SL-LET interval SL-LET-1 will reference the zone clock ZC_1

and the - not yet defined - zone clock ZC_x. Such a hierarchical concretization can be constrained in advance, by specifying the attributes `accuracyExt` and `accuracyInt` of `TDLETZoneClock`.

Without knowledge of the specific lower LET zones, a SL-LET interval SL-LET-1 can be specified with respect to ZC_2. If both, the release as well as the terminate event of the SL-LET interval relate to ZC_2, the internal synchronization accuracy `accuracyInt` of ZC_2 has to be considered. This abstracts the synchronization between any two lower LET-zones of TZ_2. If only one of the two events relates to ZC_2 and the other one for example relates to ZC_1, the external synchronization accuracy `accuracyExt` of ZC_2 has to be considered. This abstracts the synchronization accuracy between a lower LET-zone of TZ_2 and any foreign LET-zone.

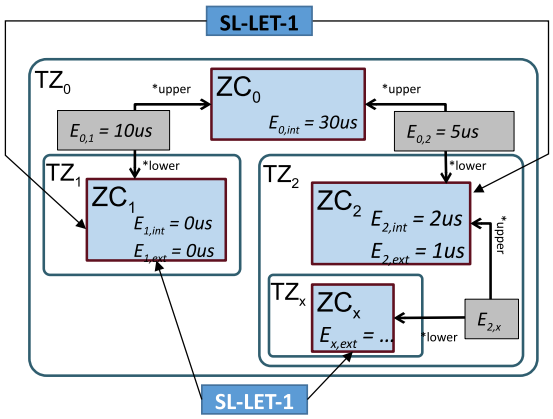

Figure 3.16: Exemplary definition of hierarchical LET Zones

3.2.2.1 SL-LET Zone Clocks

This section details the `TimingClock`.

[TPS_TIMEX_00100] Optionality of `accuracyInt` ⌈If the attribute `accuracyInt` is unspecified, it shall be treated as zero. This is the case, if a LET-zone has no lower LET-zones.⌋

[TPS_TIMEX_00103] Optionality of `accuracyExt` ⌈If the attribute `accuracyExt` is unspecified, it shall be treated as zero. This is the case, if a LET-zone has no lower LET-zones.⌋

3.2.2.2 SL-LET Zone Clock Accuracy

[TPS_TIMEX_00108] Usage of the attribute `accuracy` of `TimingClockSyncAccuracy` ⌈The attribute `accuracy` of `TimingClockSyncAccuracy` specifies the

synchronization accuracy between the higher level `TDLETZoneClock`, which is referenced by the `upper` attribute and a lower level `TDLETZoneClock`, which is referenced by the `lower` attribute.⌋

3.3 Classic Platform Software Clusters

This section describes the support for specifying timing models for *software clusters*. The notion of software cluster and its purpose are described in more detail in [3].

During system design *software clusters* are defined. Software clusters consist of an arbitrary number of software components as sketched in Figure 3.17. The internal structure of those software clusters, like further composition software components and atomic software components, are not known at system design time. Typically, those internals, especially the internal behaviors of the atomic software components along with runnable entities, are the result of further steps taken during the development of the software components. Eventually, the runnable entities need to be assigned to appropriate operating system tasks to ensure the proper execution and therefore a correct provision of the expected functionality realized by the runnable entities. Or, in other words, the operating system being used must provide the needed execution contexts for the runnable entities of a software cluster, if the software cluster is supposed to provide such temporal and dynamic resources.

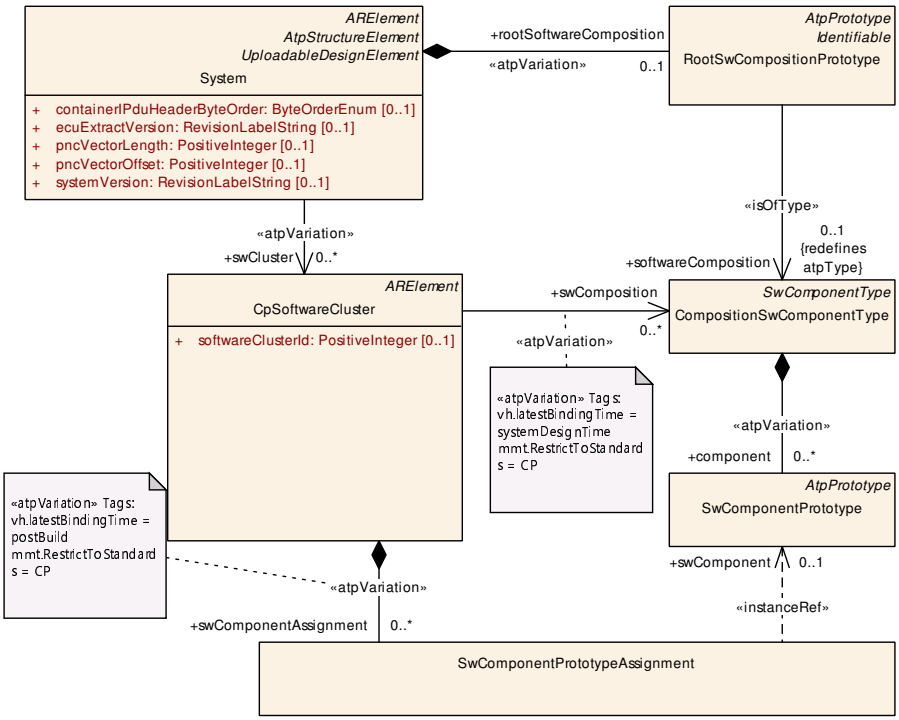

Figure 3.17: Software Cluster Overview

In order to provide a frame at the beginning and during the system design, the elements available in TIMEX are used for describing the temporal and dynamic requirements and characteristics imposed on the execution environment that is needed for

proper execution of the software cluster's runnable entities. The notion behind the described approach is that the execution contexts needed by possible runnable entities of a software cluster are abstracted using the elements TimingDescriptionEvent, TimingDescriptionEventChain, and TimingConstraint to specify the temporal parameters of such execution contexts. The execution context is called *dispatcher* as an abstraction for a system event that occurs to activate the execution of a set of runnable entities in the target system.

The way the AUTOSAR elements are utilized is described in the remaining part of this section.

Since software clusters are defined during system design respectively on the AUTOSAR software system level, the system timing view (SystemTiming) is used for creating the corresponding timing models. This is shown in the Figure 3.18.

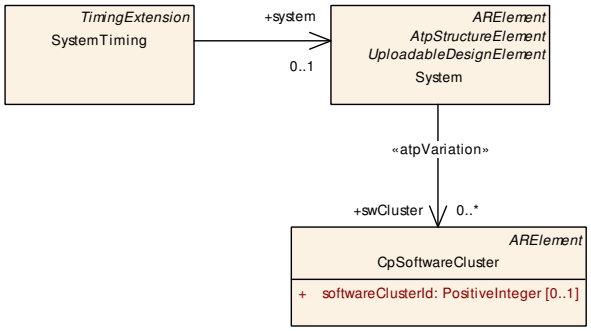

Figure 3.18: System timing used to specify the timing for one or more software clusters

A system timing describing the timing model for a software cluster or a group of software clusters references a system that in turn references one or more software clusters. In the latter case, the scope of the timing model is the set of referenced software clusters. Primarily, the timing model of a system timing for a software cluster contains the definition of the execution context – dispatchers – required for the proper execution of the runnable entities that are later defined in the development.

[TPS_TIMEX_00127] SystemTiming of classic platform software clusters ⌈A SystemTiming which references a System.category== SW_CLUSTER_SYSTEM_DESCRIPTION ([TPS_SYST_01003]) is intended to observe the timing of Classic Platform software clusters.⌋

3.3.1 Specifying a Dispatcher

The value of the attribute category of a TimingDescriptionEvent indicates if the timing description represents the entry point or the exit point point of a dispatcher. The value DISPATCH_ENTRY_POINT indicates the point in time the dispatcher is entered. And the value DISPATCH_EXIT_POINT indicates the point in time the dispatcher is exited.

[constr_4561] Usage of the category value DISPATCH_ENTRY_POINT in TimingDescriptionEvent

Imposition time: IT_TimingViewReady

⌈The value DISPATCH_ENTRY_POINT of the attribute category of a TimingDescriptionEvent shall be set if and only if the timing description event plays the role of a stimulus event and the corresponding timing description event chain, referencing this timing description event, represents a dispatcher in the context of describing timing of a software cluster.⌋

[constr_4562] Usage of the category value DISPATCH_EXIT_POINT in TimingDescriptionEvent

Imposition time: IT_TimingViewReady

⌈The value DISPATCH_EXIT_POINT of the attribute category of a TimingDescriptionEvent shall be set if and only if the timing description event plays the role of a response event and the corresponding timing description event chain, referencing this timing description event, represents a dispatcher in the context of describing timing of a software cluster.⌋

As sketched in Figure 3.19 a dispatcher for a software cluster is specified by a timing description event chain TimingDescriptionEventChain. The timing description event chain references two timing description events TimingDescriptionEvents representing the dispatcher's entry point (stimulus event of the timing description event chain) and the dispatcher's exit point (response event of the timing description event chain). The value of the first element's attribute category is DISPATCH_ENTRY_POINT; and the value of the latter element's attribute category is DISPATCH_EXIT_POINT. The complex timing event TDEventComplex is used for the purpose to indicate the event that occurs when the dispatcher is entered and exited. The complex timing event is used because both timing description events are not referencing an *observable* location, like the other types of timing description events. The event occurrence expression of the complex timing event may be used to specify the particular event supposed to occur in case of entering and exiting the dispatcher.

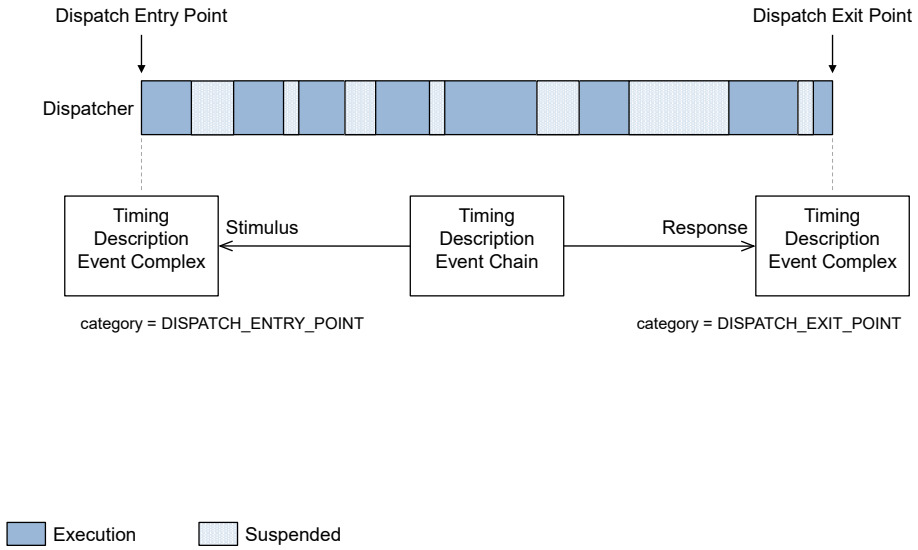

Figure 3.19: Specifying a Dispatcher for a Software Cluster

The listing C.11 shows an ARXML fragment that matches what is shown in Figure 3.19. It specifies a timing description event chain, and two timing description events representing the entry and exit point of this dispatcher. The former timing description event plays the role *stimulus* and the latter timing description event plays the role *response* of the timing description event chain representing the dispatcher.

The attribute `category` of a `TimingDescriptionEvent` indicates the use of this element in the context of timing models for software clusters respectively dispatchers.

The value of the attribute `category` of a `TimingDescriptionEvent` indicates if the timing description event represents the dispatch entry point of a dispatcher belonging to a software cluster or the dispatch exit point of a dispatcher belonging to a software cluster. The value `DISPATCH_ENTRY_POINT` indicates the point in time the dispatcher is entered respectively activated. And the value `DISPATCH_EXIT_POINT` indicates the point in time the dispatcher is exited respectively terminated. For more details refer to section 2.3.2 and in particular constraints [constr_4561] and [constr_4562].

3.3.2 Specifying Timing Parameters of a Dispatcher

The timing parameters of a dispatcher are specified in the same fashion as an LET interval and shall be specified according to the explanation in 3.1 particularly the *maximum execution time* (*duration*) of a dispatcher.

A latency timing constraint is imposed on a timing description event chain representing a dispatcher and the attribute `maximum` specifies the maximum execution time of the dispatcher, as shown in Figure 3.20. The value of the attribute `minimum` shall be set to zero (0) because it is not expected that a dispatcher *must* execute for a minimum period of time.

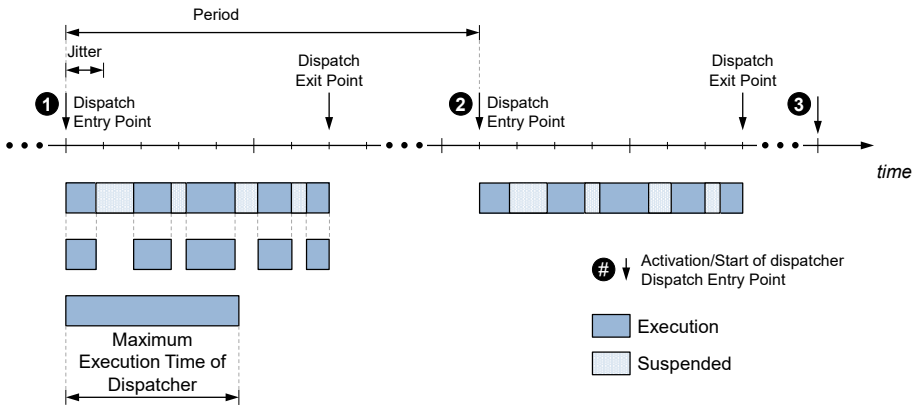

Figure 3.20: Maximum execution time of a dispatcher

As depicted in Figure 3.20 the timing parameters of a dispatcher are specified by a latency timing constraint and periodic event triggering constraint. The latency timing constraint specifies the maximum execution time of a dispatcher within the given period specified by the periodic event triggering constraint.

The listing C.11 shows an ARXML fragment which defines a latency timing constraint of 500μs that is imposed on the timing description event chain — dispatcher — defined in listing C.11. In essence, this latency timing constraint specifies the maximum execution time of the dispatcher to be 500μs.

The recurrence of a dispatcher is specified using the periodic event triggering constraint `PeriodicEventTriggering`. This timing constraint is imposed on the stimulus event — the entry point of the dispatcher — of the timing description event chain representing a dispatcher. The listing C.11 shows an ARXML fragment which defines a periodic event triggering constraint that specifies a recurrence of 10ms; in other words the dispatcher is entered every 10ms. Note that the execution of a dispatcher is supposed to be completed before the dispatcher is started — entered — again.

3.3.3 Mapping Executable Entities to a Dispatcher

Eventually, the executable entities belonging to the internal behavior of atomic software components within the software clusters shall be assigned to temporal and dynamic resources that are provided by the available *host* software cluster. Since the temporal resource is either a dispatcher or a LET interval, the executable entities need to be assigned to either of them.

In both cases the capabilities of the element `ExecutionOrderConstraint` are used for this purpose. To assign executable entities to LET intervals is described in section 3.1.3 in detail.

An `ExecutionOrderConstraint` is specified consisting of `EOCEventRef`s which reference the RTE events of the executable entities that shall be assigned to the dispatcher. These `EOCEventRef`s are specified as nested elements in an `EOCExecutableEntityRefGroup`. The `triggeringEvent` of the

EOCExecutableEntityRefGroup references the TDEventComplex that plays the role of a dispatch entry point respectively dispatcher.

The listing C.11 shows an ARXML fragment which specifies that the runnable entity one (1) of application software component five (5), runnable entity one (1) of application software component two (2), runnable entity two (2) of application software component 15, runnable entity two (2) of application software component eight (8), runnable entity one (1) of application software component 13, and runnable entity three (3) of application software component nine (9) are executed in the context of the dispatcher called ”Dispatcher10ms”. Those runnable entities are all part of application software components that are part of the application software cluster called ”SoftwareClusterA”.

3.3.4 Mappings between Software Clusters

An important step during the development of AUTOSAR software systems is to specify contracts between various parties that are involved in the development. To specify provided and needed temporal and dynamic resources the *software cluster mappings* are used. The purpose of these mappings are firstly to unequivocally identify a temporal and dynamic resource, and secondly to specify the software cluster providing such resources and specify the software clusters that request such resources. The Figure 3.21 shows these mapping elements and their relationships.

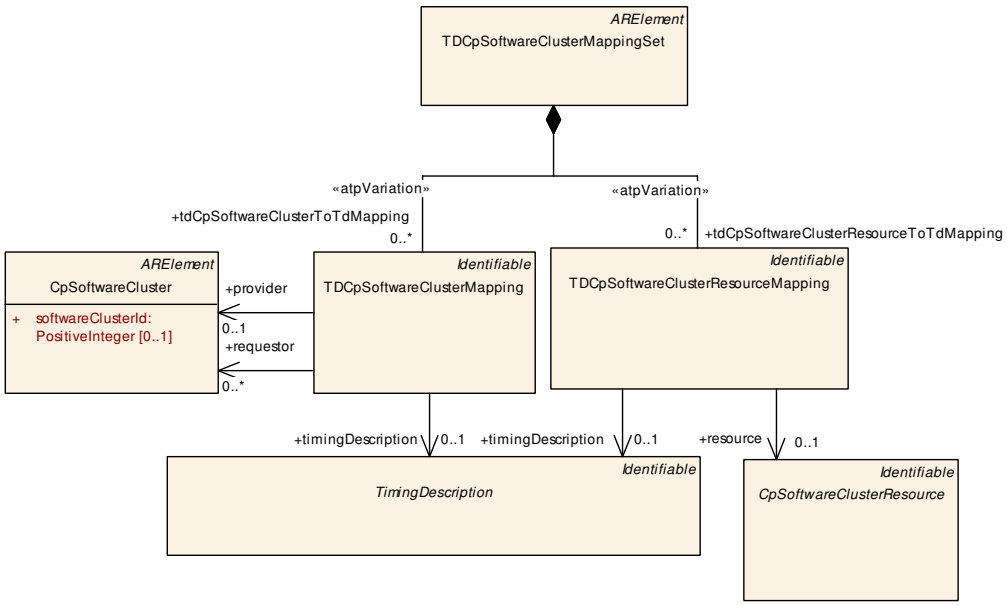

Figure 3.21: TimingCpSoftwareClusterMapping

Class	**TDCpSoftwareClusterMappingSet**
Note	This is used to gather of classic platform software cluster mappings. **Tags:** atp.recommendedPackage=TimingExtensions This Class is only used by the AUTOSAR Classic Platform.

▽

△

Class	TDCpSoftwareClusterMappingSet			
Base	*ARElement*, *ARObject*, *CollectableElement*, *Identifiable*, *MultilanguageReferrable*, *Packageable Element*, *Referrable*			
Aggregated by	ARPackage.element			
Attribute	**Type**	**Mult.**	**Kind**	**Note**
tdCpSoftware Cluster ResourceToTd Mapping	TDCpSoftwareCluster ResourceMapping	*	aggr	Maps a CP software cluster resource to a temporal resource. **Stereotypes:** atpVariation **Tags:** atp.Splitkey=tdCpSoftwareClusterResourceToTdMapping, tdCpSoftwareClusterResourceToTdMapping.shortName, tdCpSoftwareClusterResourceToTdMapping.variation Point.shortLabel vh.latestBindingTime=postBuild
tdCpSoftware ClusterToTd Mapping	TDCpSoftwareCluster Mapping	*	aggr	Maps a temporal resource to a mapping between a providing CP software cluster and requesting CP software clusters. **Stereotypes:** atpVariation **Tags:** atp.Splitkey=tdCpSoftwareClusterToTdMapping, tdCp SoftwareClusterToTdMapping.shortName, tdCpSoftware ClusterToTdMapping.variationPoint.shortLabel vh.latestBindingTime=postBuild

Table 3.5: TDCpSoftwareClusterMappingSet

Class	TDCpSoftwareClusterMapping			
Note	This is used to specify a mapping between a software cluster that provides temporal and dynamic resources and the software clusters that need these resources. This Class is only used by the AUTOSAR Classic Platform.			
Base	*ARObject*, *Identifiable*, *MultilanguageReferrable*, *Referrable*			
Aggregated by	TDCpSoftwareClusterMappingSet.tdCpSoftwareClusterToTdMapping			
Attribute	**Type**	**Mult.**	**Kind**	**Note**
provider	CpSoftwareCluster	0..1	ref	This is the software cluster that provides the temporal and dynamic resource. **Tags:** atp.Splitkey=provider
requestor	CpSoftwareCluster	*	ref	This is the software cluster that requests the temporal and dynamic resource. **Tags:** atp.Splitkey=requestor
timing Description	TimingDescription	0..1	ref	The timing description representing the temporal and dynamic resource. **Tags:** atp.Splitkey=timingDescription

Table 3.6: TDCpSoftwareClusterMapping

[constr_6918] Referenced `TimingDescription`s in `TDCpSoftwareCluster-Mapping` and `TDCpSoftwareClusterResourceMapping`

Imposition time: `IT_TimingViewReady`

⌈The references:

- `TDCpSoftwareClusterMapping.timingDescription`
- `TDCpSoftwareClusterResourceMapping.timingDescription`

shall refer to either:

- TDEventComplex.category==DISPATCH_ENTRY_POINT, or
- TimingDescriptionEventChain.category==LET_INTERVAL

⌋

[constr_6919] Referenced CpSoftwareCluster of TDCpSoftwareCluster-Mapping

Imposition time: IT_TimingViewReady

⌈Each TDCpSoftwareClusterMapping.provider reference shall refer to a CpSoftwareCluster.category==HOST_SOFTWARE_CLUSTER and each TDCp-SoftwareClusterMapping.requestor reference shall refer to a CpSoftware-Cluster.category==APPLICATION_SOFTWARE_CLUSTER⌋

Class	**TDCpSoftwareClusterResourceMapping**			
Note	This is used to assign an unequivocal global resource identification to a temporal and dynamic resource. This Class is only used by the AUTOSAR Classic Platform.			
Base	*ARObject*, *Identifiable*, *MultilanguageReferrable*, *Referrable*			
Aggregated by	TDCpSoftwareClusterMappingSet.tdCpSoftwareClusterResourceToTdMapping			
Attribute	***Type***	***Mult.***	***Kind***	***Note***
resource	CpSoftwareCluster Resource	0..1	ref	The specific resource identification assigned to the temporal and dynamic resource. **Tags:** atp.Splitkey=resource
timing Description	TimingDescription	0..1	ref	The timing description representing the temporal and dynamic resource. **Tags:** atp.Splitkey=timingDescription

Table 3.7: TDCpSoftwareClusterResourceMapping

[constr_4565] Consistency of TDCpSoftwareClusterMapping.timing-Description and TDCpSoftwareClusterResourceMapping.timing-Description

Imposition time: IT_TimingViewReady

⌈The references:

- TDCpSoftwareClusterMapping.timingDescription
- TDCpSoftwareClusterResourceMapping.timingDescription

shall (after [constr_6918] has been applied) refer to the same sub-class and category of TimingDescription⌋

The listing C.11 shows an ARXML fragment which describes that the *application* software cluster called ”SoftwareClusterA” requires two temporal resources provided by the *host* software cluster called ”SoftwareClusterHost”. The two required temporal resources are the dispatcher called ”Dispatcher10ms” and the logical execution time interval called ”Let5msInterval”.

3.3.5 Example

In the given example, an AUTOSAR software system consists of eleven (11) composition software components. The composition software component *type* called ”CSWCT01” plays the role of the root software composition software prototype of this system. The composition software component type contains two composition software component *prototypes* called ”cSwcPt02” and ”cSwcPt03”. The composition software component type ”CSWCPT02” contains two composition software component prototypes called ”cSwcPt04” and ”cSwcPt09”; and the composition software component type called ”CSWCT03” contains the composition software component prototypes called ”cSwcPt05 and cSwcPt06”. The composition software component type called ”CSWCT04” contains two composition software component prototypes called ”cSwcPt07” and ”cSwcPt08”. And last but not least, the composition software component type called ”CSWCT06” contains two composition software component prototypes called ”cSwcPt10” and ”cSwcPt11”. The composition hierarchy of the software components is shown in Figure 3.22.

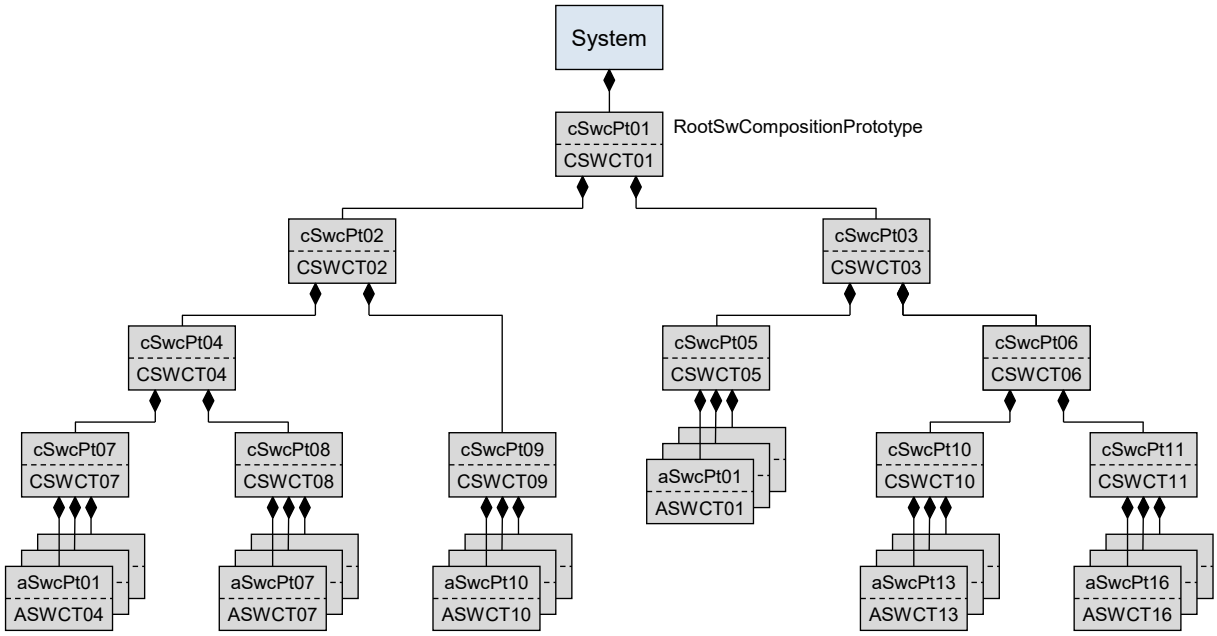

Legend:

cSwcPt# Composition SW Component Prototype
CSWCT# Composition SW Component Type
aSwcPt# Atomic SW Component Prototype
ASWCT# Atomic SW Component Type

Figure 3.22: Example Software Cluster

Each of the composition software component types called ”CSWCT05”, ”CSWCT07”, ”CSWCT08”, ”CSWCT09”, ”CSWCT10” and ”CSWCT11” contain three atomic software component prototypes. The names of these atomic software component prototypes are following the rule ”aSwcPt##”. The placeholder ”##”, representing a two digit number with leading zero, ranges from 01 to 18. For example, the composition software component type ”CSWCT05” contains the three atomic software component prototypes

called ”aSwcPt01”, ”aSwcPt02” and ”aSwcPt03”. Any of the atomic software component types have an internal behavior and each of those internal behaviors consists of three runnable entities named ”re#ASWCT##”; for example, the name ”re1ASWCT05” denotes the first runnable entity of the atomic software component type five (5). An RTE Event — Timing Event — is specified for each of the runnable entities, and is named as follows: ”teRe#ASWCT##”.

The described software system consists of two software clusters called ”Software Cluster A” and ”Software Cluster B”. This is shown in the Figure 3.23. The software cluster A consists of the composition software components ”cSwcPt04”, ”cSwcPt05”, ”cSwcPt07”, ”cSwcPt08” and ”cSwcPt10”. And the software cluster B consists of the composition software components ”cSwcPt09” and ”cSwcPt11”.

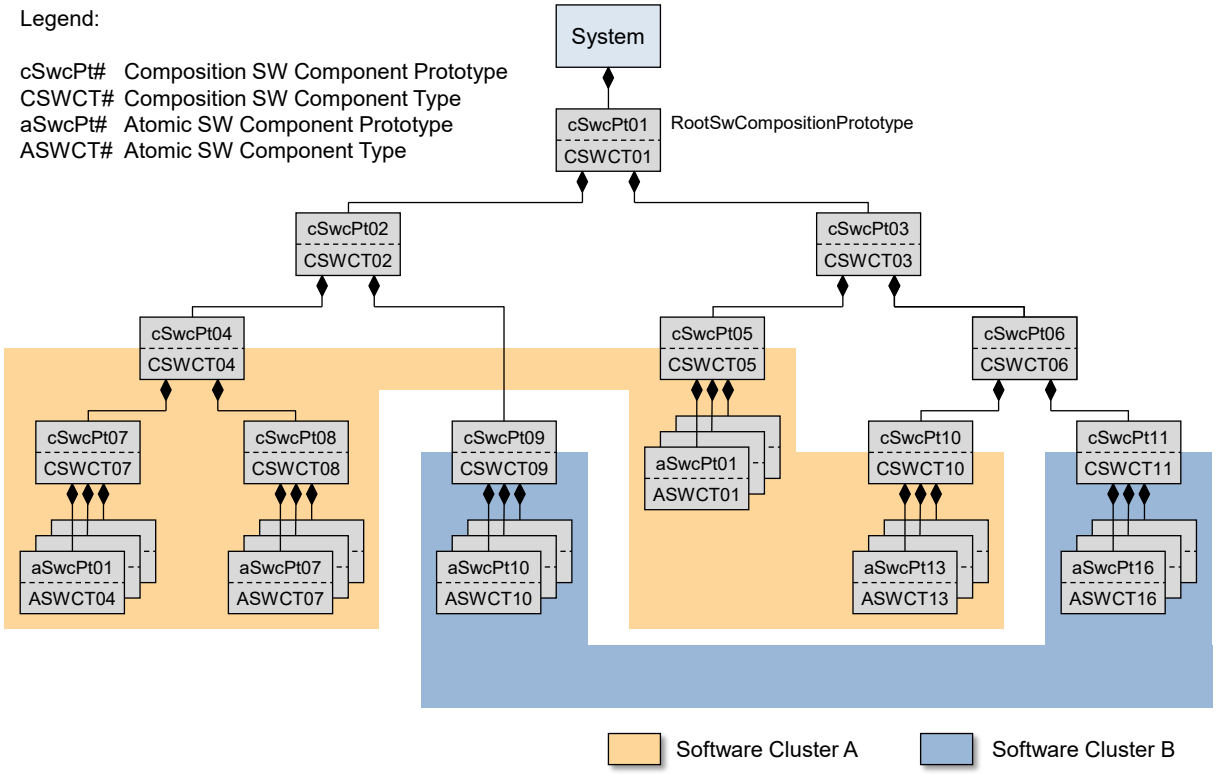

Figure 3.23: System consisting of two Software Clusters

The assumption is that the temporal resources, needed by the software cluster A and software cluster B, are provided by a third software cluster representing the *host* software cluster.

A Reference Material

A.1 Terms and Abbreviations

The content of this appendix chapter is *informative* in nature and shall **not** be considered as *normative* content.

This chapter includes terms and abbreviations locally relevant within this document. The main list of terms and abbreviations is available in [7]

Abbreviation	Meaning
-	-

Table A.1: Abbreviations used in the scope of this Document

Term	Meaning
Jitter	For a periodically occurring timing event, the jitter is defined as the maximum variation of its period with respect to a predefined standard period.
Latency	The latency of a timing event chain describes the time duration between the occurrence of the stimulus and the occurrence of the corresponding response.
Maximum interarrival time	Describes the maximum time interval between two consecutive event occurrences. In the more general case, this attribute is an array of the maximum latency between two, three, four, ... event occurrences.
Minimum interarrival time	Describes the minimum time interval between two consecutive event occurrences. In the more general case, this attribute is an array of the minimum latency between two, three, four, ... event occurrences.
Period	Describes the expected time interval between two consecutive event occurrences, neglecting variation (jitter).
Synchronization	Synchronization focuses on the occurrence of different timing events. Synchronization of timing events means that they shall occur simultaneously within a certain tolerance interval.
Timing analysis	Timing analysis is a method of determining the timing behavior of the system. This includes consideration of timing relevant system behavior like task preemptions, interrupt handling, resource blocking, etc.
Timing path	A timing path defines a sequence of communication or computation activities of the system, whose timing behavior shall be examined. Timing paths can be expressed by event chains.
Timing property	A timing property defines the state or value of a timing relevant aspect within the system. Thus, a property does not represent a constraint for the system, but a somehow gathered (e.g. measured, estimated or determined) or defined attribute of the system.
Timing requirement	A timing requirement defines a restriction on timing that shall be fulfilled to ensure proper operation of the system. Timing requirements can be expressed by using timing constraints.

Table A.2: Terms used in the scope of this Document

A.2 Imposition Times

The constraints formulated in this document have different actual imposition times which denote the steps in the workflow when the respective constraint has to be imposed.

The imposition times that are considered applicable in the scope of this document *(other imposition times may be defined in the context of other AUTOSAR standard documents)* are listed here.

The imposition times are intentionally rendered as technical terms such that it is possible to link back from each constraint to the definition of the affected imposition time in the table here.

Imposition Time	Description	Motivation
IT_TimingDescription Ready	The constraint shall be imposed when the TimingDescription is ready for validation	This can be either on the TimingDescriptionEventChain or the sub-class of TimingDescriptionEvent depending on the condition of the constraint.
IT_TimingView Ready	The constraint shall be imposed when the TimingExtension (Timing View) is ready for validation	-

Table A.3: Imposition Times of constraints in this document

B Test Cases

The content of this appendix chapter is *informative* in nature and shall **not** be considered as *normative* content.

This chapter outlines two test case examples describing a potential approach to use TIMEX in a practical way. Furthermore, chapter B.3 describes the use of external VFB events in more detail.

B.1 Component integration

One of the main concerns for the usage of the AUTOSAR development methodology and AUTOSAR exchange formats is the need of OEMs and suppliers to exchange specification data in a machine-readable, reliable and straightforward way in order for example to integrate components in systems. The primary purpose of TIMEX is to facilitate requesting a specific timing behavior of such SWCs and this topic is described in this section in more detail based on an integration scenario.

Integrating a software component instance delivered by an external party requires the provision of timing information related to this component. As this information can be attached to specific `SwComponentType`, with regards to its communication partners, the according view `VfbTiming` (see 2.1.1) is used. Additionally, specific timing constraints for implementing this software component are given, too.

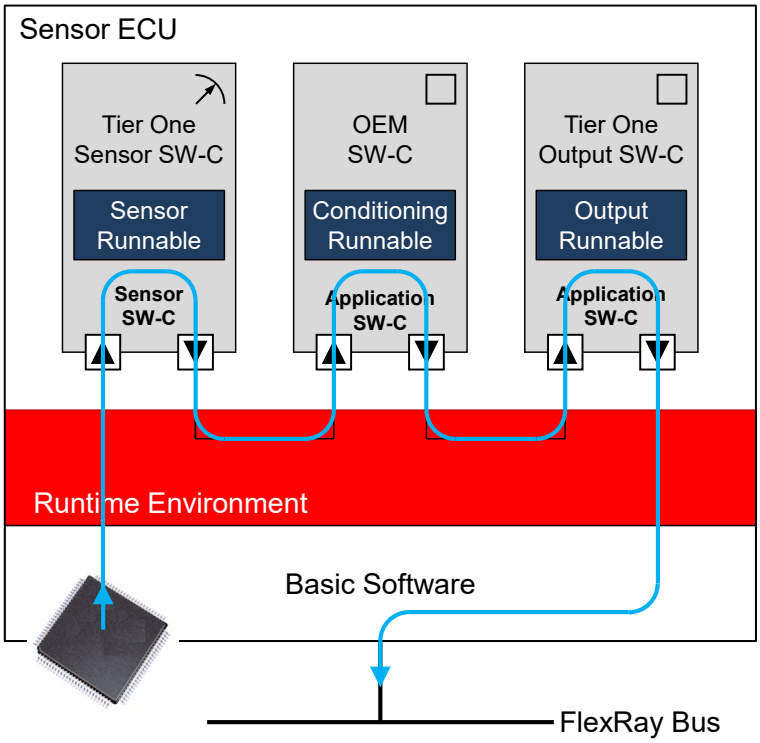

Figure B.1: A Sensor ECU connected with a FlexRay Network and three software components

Figure B.1 outlines the scenario in a demonstrative way. The shown ECU holds three software components:

SwcSensor : reads data from a hardware sensor

SwcConditioning : performs signal data conditioning like filtering and averaging

SwcOutput : converts internal data representations to ready-to-send data representations (e.g. float32) to ready-to-send data representations (e.g. Uint16)

As certain requirements for sensor data conditioning as an input for several other functions within the vehicle exist, the SWC SwcConditioning may be delivered by the OEM, directly. A partial description of these components, ports, and interfaces is shown in listing C.16.

In addition to this, receiving the sensor data by other ECUs, which are not shown in the figure, requires this data to fulfill certain timing requirements regarding their maximum age, for example. Mapped to the figure this means that the blue data path drawn shall has a specific temporal length. This requirement is the other hand side of the actual scenario.

The SWC SwcConditioning is delivered by the OEM for the sake of implementing special filtering or averaging algorithms applied on the measured sensor data. Thus, the mapping of SWC to this ECU is fixed, already. To fulfill certain non-functional requirements, the implementing RunnableEntity of SwcConditioning needs to be executed straight away after RunnableEntity of component SwcSensor and right before RunnableEntity of SwcOutput.

In addition, the Tier-1 needs information about the execution times of the RunnableEntity he has to expect when integrating SwcConditioning. Specifying this can be done by describing the measured (or simulated, estimated, etc.) execution times of the RunnableEntity. The following subsections give a brief idea how this can be accomplished by utilizing the capabilities of TIMEX.

B.1.1 VFB view

At first, timing descriptions and constraints on VFB level are defined. The SWC SwcConditioning receives data via its required port UnprocessedSensorData at a specific point in time. This point is denoted by the event ConditioningReceived, whereas the event ConditioningSent denotes the point in time data is sent via the provided port ProcessedSensorData. To prescribe a ”maximum age” for the reading input the LatencyTimingConstraint is used. For this, the *external* event SensorDataProduced is defined.

Based on this, an event chain between this external event SensorDataProduced and the ConditioningReceived event is specified — the event SensorDataProduced has the role of the stimulus event and the event ConditioningReceived has the role

of the response event with regard to the specified event chain. The LatencyTimingConstraint is pointing to this event chain. The representation of the events, event chain and the corresponding timing constraint is shown in listing C.17.

B.1.2 ECU view

After generating the ECU extract, implementation related details of the ECU are available and execution order constraints for the mapped SWCs — more precise, their RunnableEntitys — exist. For the sake of easiness, each SWC implements one RunnableEntity. Constraining their execution order using the ExecutionOrderConstraint is shown in listing C.18.

Another typical constraint describes the maximum time to be elapsed for sending data on the bus. Therefore, an event DataTransmitted representing the point in time the data is sent on the bus is specified using the event type TDEventFrame (listing C.19). Additionally a TimingDescriptionEventChain is specified having ConditioningSent as stimulus event and DataTransmitted as response event (see listing C.20).

The constraint prescribing the maximum latency between the point in time the stimulus event occurs and the point in time the response event occurs is shown in listing C.21.

B.2 Engine control

This example illustrates an example for the definition of timing constraints in an engine management system. Although the system is simplified to be included within this chapter it is based on a real world example in its basic concepts. The example system is an air-mass-controlled gasoline internal combustion engine control system. Functionally (in terms of SWCs) it is described thus:

Sensors : Three SensorActuatorSwComponentTypes are responsible for reading in the most important control factors:

- MassAirFlowSensor
- AcceleratorPedalSensor
- ThrottleSensor

Application Based Calculation : Most ApplicationSwComponentTypes calculate the new control factors for the engine, these components are:

- AcceleratorPedalVoter
- ThrottleController
- ThrottleChange
- BaseFuelMass

- TransientFuelMass
- Ignition
- TotalFuelMass

Actuators : The control of the actuators is encapsulated by the SensorActuatorSwComponentTypes:

- ThrottleActuator
- InjectionActuator
- IgnitionActuator

Engine Mode and Control : The engine can be operated in different operation modes. The AtomicSwComponentType=OperatingMode includes a state machine which decides what setting for the application based calculation is used depending on the current mode, for example normal drive, idle speed, etc. Similar values are delivered by the IdleSpeedControl which determines important inputs for application calculation during idle speed.

Miscellaneous : The AtomicSwComponentType=InjBatVoltCorrectionSensor provides the input from the battery voltage sensor. The AtomicSwComponentType CylNumObserver is checking whether a change in the cylinder number is sensed and afterwards schedules the application based calculation. In this example application it is assumed that the cylinder number is provided externally within a rate of $2.5ms$.

Since giving a complete overview of the system would result in an highly connected graph, Figure B.2 shows a simplified sketch of the System because a detailed presentation of such a system would go far beyond the scope of this section. The blue colored lines show important signal paths that are considered to be important for timing analysis and are typically subject to be constrained by timing requirements.

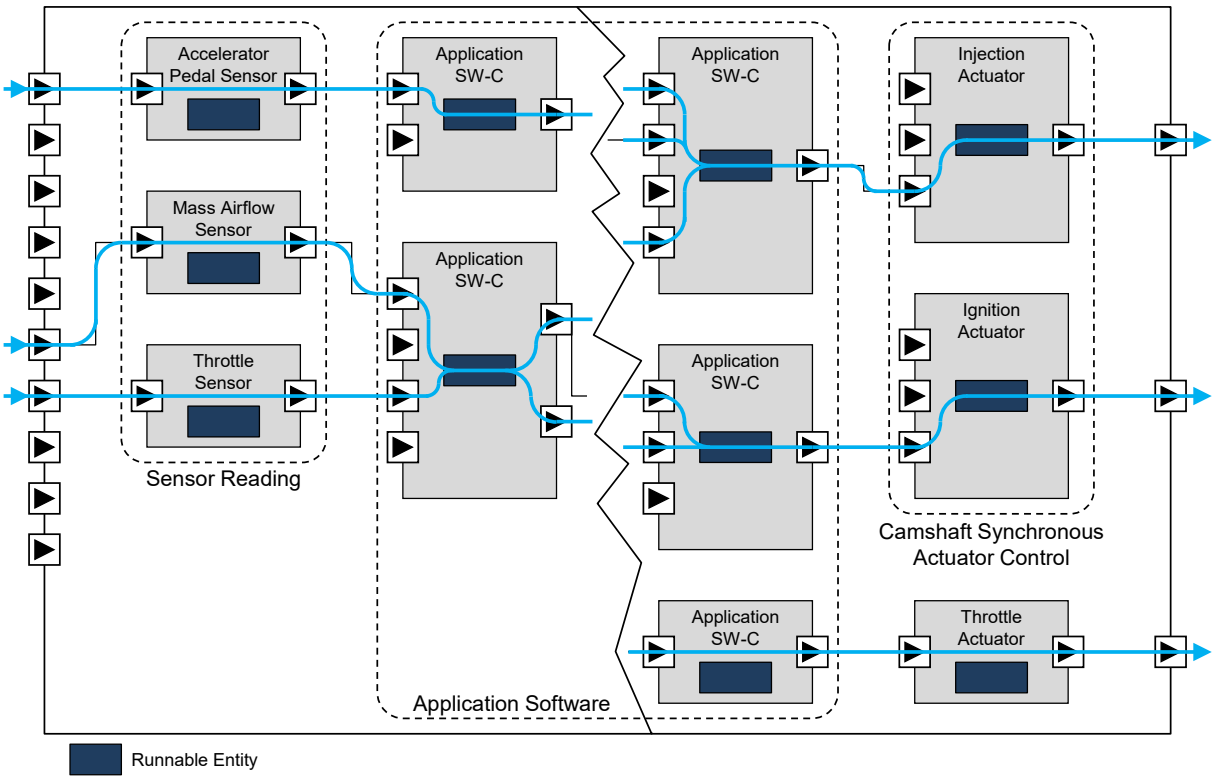

Figure B.2: Rough sketch of an internal combustion engine control system including important signal flow paths.

B.2.1 Timing Requirements

Assume the following timing requirements are stated and imposed on the sketched engine control application:

Requirement_1 : When the position of the accelerator pedal changes then the throttle shall be actuated within $30ms$.

Requirement_2 : The maximum age of the throttle position value tolerated by the application software shall not exceed $10ms$.

Requirement_3 : The calculation of ignition timing shall be completed latest $50ms$ after the a change of the position of the accelerator pedal has been detected.

Requirement_4 : The calculation of the ignition timing shall be completed $3ms$ after the `BswInterruptEntity` of the Basic Software Module called `Camshaft` has been activated.

Requirement_5 : For each cylinder the calculation of the corresponding injection mass shall be activated every $20ms$ (50Hz) and shall be completed not later than $20ms$ after its activation.

The listed requirements need to be transformed into timing requirements captured by the capabilities of TIMEX. The following subsections present how the timing models look alike for every of those requirements.

B.2.1.1 Formal description of timing constraints in view `VfbTiming`

It should be understood that the requirements from section B.2.1 can be mapped to timing constraints that reference different parts of the system. Since a comprehensive and detailed overview of the whole system would go beyond the scope of this section only the important parts of the system and its timing are given to convey the idea behind using the AUTOSAR Specification of Timing Extensions for each presented timing requirement.

`Requirement_1` to `Requirement_3` are expressed in the VFB view respectively VFB Timing (`VfbTiming`).

B.2.1.1.1 `Requirement_1`

Figure B.3 shows the simplified signal flow and involved components. It has been identified that the critical path of execution has an effect on four SWCs. The `SensorActuatorSwComponentType`=`AcceleratorPedalSensor` is responsible for reading in the signal and passes it to the `ApplicationSwComponentType`=`AcceleratorPedalVoter`. Afterwards the processed signal is further processed in the `ApplicationSwComponentType`=`ThrottleController` until it is finally sent to the actuator via `SensorActuatorSwComponentType`=`ThrottleActuator`. For specification of the timing constraint a `TimingDescriptionEventChain` shall be defined along with the appropriate timing description events. These timing descriptions and timing constraints are presented in listing C.22 and cover the whole path from the sensor to the actuator.

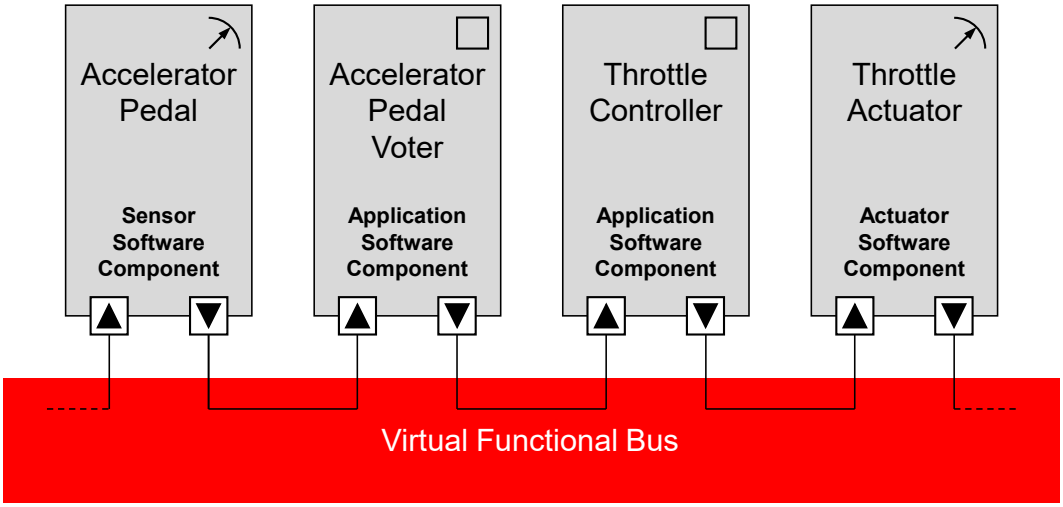

Figure B.3: Involved components for signal flow from `AcceleratorPedalSensor` to `ThrottleActuator` for timing `Requirement_1`.

Since a timing constraint is imposed on the ”sensor to actuator” communication the chosen constraint is a LatencyTimingConstraint and it's latencyConstraintType=reaction. Also note that the overall TimingDescriptionEventChain references all segments the TimingDescriptionEventChain consists of.

B.2.1.1.2 Requirement_2

Requirement_2 specifies a typical timing constraint concerning the age of data provided by a sensor. For calculation in the AtomicSwComponentType=BaseFuelMass — which is here chosen as an example of the application software — a maximum age of input data concerning the throttle angle shall be guaranteed. The sensor value is determined in the SensorActuatorSwComponentType=ThrottleSensor and is passed to the application software. Figure B.4 shows all involved software components.

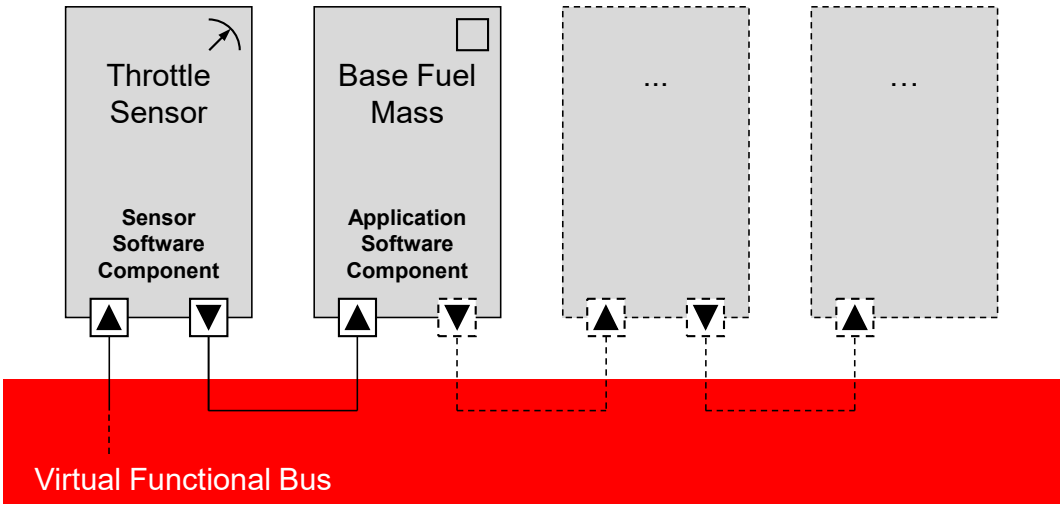

Figure B.4: Involved components for signal flow from ThrottleSensor to application component BaseFuelMass for Requirement_2.

Please note that even if the signal flow continuous to other parts of the system, it is possible to specify only this aspect of the desired timing behavior as shown in listing C.23.

B.2.1.1.3 Requirement_3

In Requirement_3, a more complex TimingDescriptionEventChain is constrained. The first part of the event chain is already defined in the context of Requirement_1. Thus, one can reference the set of defined events as well as the already specified timing description event chains. The second part of the event chain captures the feedback in the system that observes the sensor, in particular ThrottleSensor.

Please note that all events shall have a functional dependency, so it is important to understand that the SensorActuatorSwComponentType=ThrottleSensor shall utilize up-to-date information of the SensorActuatorSwComponentType=Throttle-Actuator. Figure B.5 shows the entire signal path and listing C.24 presents the entire timing information consisting of timing descriptions and timing constraints.

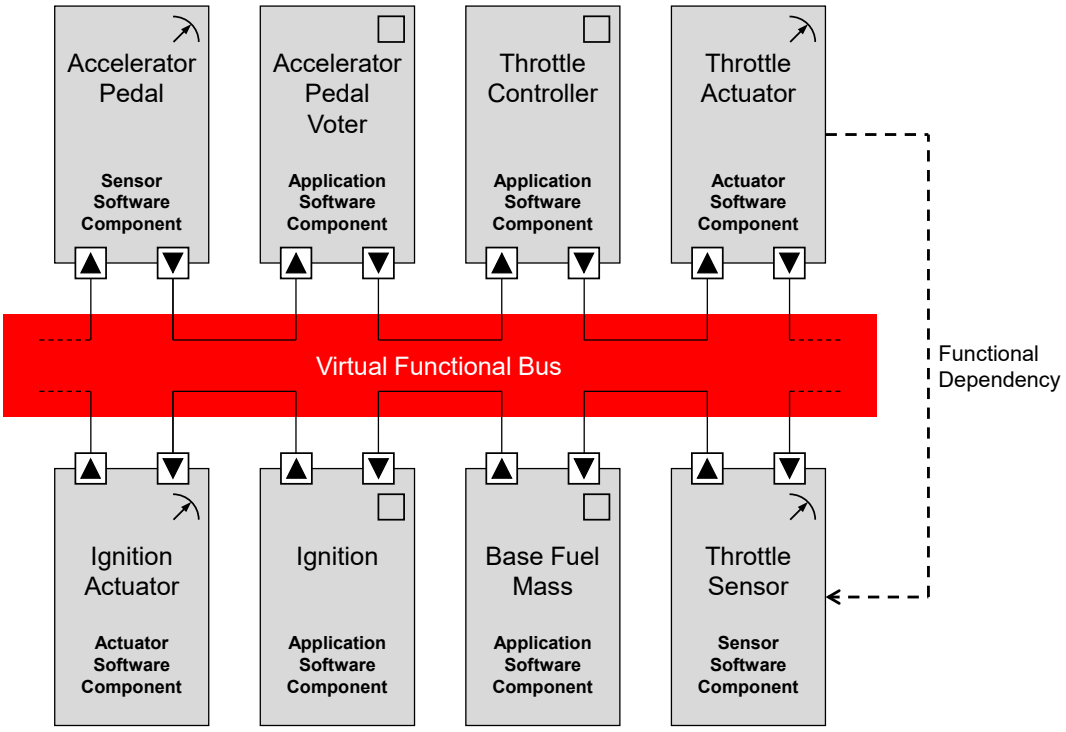

Figure B.5: Involved components for signal flow from sensor software component AcceleratorPedalSensor to SensorActuatorSwComponentType=Ignition-Actuator for Requirement_3.

B.2.1.2 Formal description of timing constraints in view EcuTiming

Since Requirement_4 references to events that are related to BSW modules, namely the interrupt system, the events shall be defined in the scope of the EcuTiming.

B.2.1.2.1 Requirement_4

The stimulus event of the timing description event chain for this requirement is the start of the BswInterruptEntity of the basic software module called Camshaft and as a result the RunnableEntity of SensorActuatorSwComponentType=Ignition-Actuator is activated. The response event of the timing description event chain is the termination of the RunnableEntity belonging to SensorActuatorSwComponent-Type=IgnitionActuator as shown in Figure B.6.

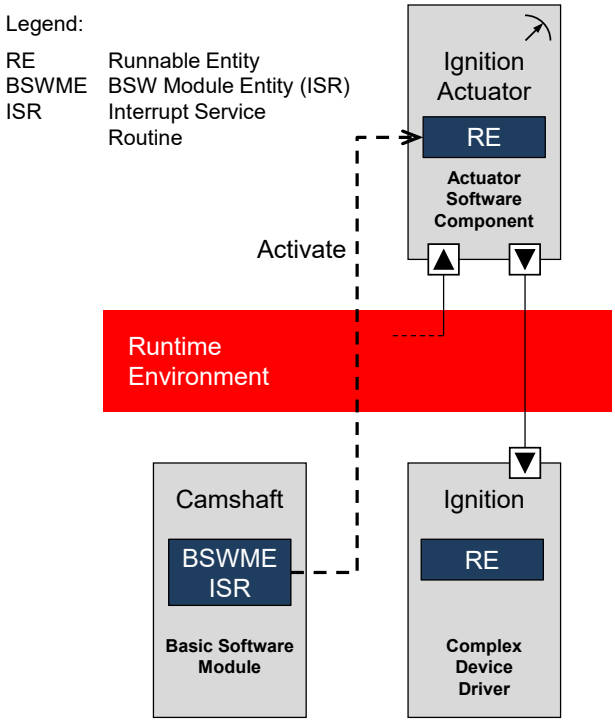

Figure B.6: Involved components and control flow for `Requirement_4`.

The timing description events and event chains for this case are presented in listing C.25.

B.2.1.3 Formal description of timing constraints in view `SwcTiming`

`Requirement_5` refers to execution behavior of a SWC's `RunnableEntity` and therefore the scope is the SWC View respectively (SWC) Timing (`SwcTiming`).

B.2.1.3.1 `Requirement_5`

The SWC timing references the internal behavior of `RunnableEntity` of SWCs. Here one reference the `RunnableEntity` of the software component `Ignition` which is a `ComplexDeviceDriverSwComponentType`. In essence, the stated timing requirement requires firstly that the delay between activation and termination of the `RunnableEntity` is less than or equal $20ms$ and secondly that the `RunnableEntity` is triggered at a frequency of $50Hz$ which means that the `RunnableEntity` is periodically activated every $20ms$.

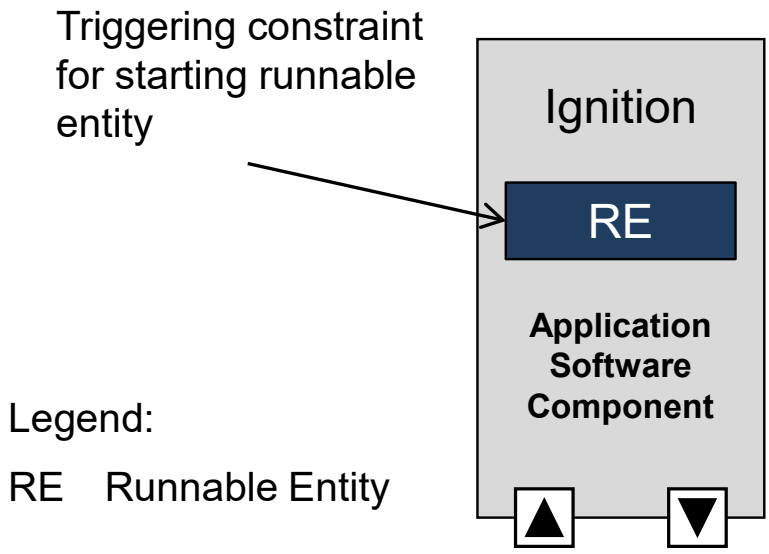

Figure B.7: Involved component and control flow for `Requirement_5`.

B.3 Describing and Constraining Sensor and Actuator Timing

Chapter 2.3.2.1 describes the specification of VFB timing description events and introduces the attribute `isExternal` of such events. If the attribute is set to TRUE, then the event is considered to be *external*, which means that the event is supposed to occur on the physical sensor and/or actuator a `SensorActuatorSwComponentType`, a `ComplexDeviceDriverSwComponentType` and `EcuAbstractionSwComponentType` is dealing with. This chapter describes how this attribute is used to describe events for sensor and actuator timing, how the different events of such kind relate to each other in event chains, and how the timing can be constrained using `TimingConstraint`s.

One of the important purposes of TIMEX, is to specify end-to-end timing constraints already in early development phases. However, in the VFB view there does not exist such elements like physical sensors, physical actuators, or other hardware related elements to attach events to. Therefore, timing description events related to the VFB View can be used to declare ”external” events. For sensor and actuator timing four cases can be distinguished: external events can be observed between a `SensorActuatorSwComponentType` and a `ComplexDeviceDriverSwComponentType`, as well as between a `SensorActuatorSwComponentType` and an `EcuAbstractionSwComponentType`.

B.3.1 External Event of a Sensor accessed via S/R

In this case the `SensorActuatorSwComponentType` receives data from the `EcuAbstractionSwComponentType` or `ComplexDeviceDriverSwComponentType` through a sender-receiver interface via its required port. Two events `TDEventVariableDataPrototype`, indicating the receipt of data, are specified and both

referencing the same required port and pointing to the the same VariableDataPrototype. The attribute isExternal of one of those events is set to TRUE and the same attribute of the other event is set to FALSE.

The semantics of the external event is that it occurs at the hardware level. The semantics of the other event is that it indicates the receipt of the data via the corresponding required port of the SensorActuatorSwComponentType. And the notion is that the external event occurs before the event indicating the receipt of data.

B.3.2 External Event of an Actuator accessed via S/R

In this case the SensorActuatorSwComponentType sends data to the EcuAbstractionSwComponentType or ComplexDeviceDriverSwComponentType through a S/R interface via its provided port. Two events TDEventVariableDataPrototype, indicating the sending of data, are specified and both referencing the same provided port and pointing to the the same VariableDataPrototype. The attribute isExternal of one of those events is set to TRUE and the same attribute of the other event is set to FALSE.

The semantics of the external event is that it occurs at the hardware level. The semantics of the other event is that it indicates the sending of the data via the corresponding provided port of the SensorActuatorSwComponentType. And the notion is that the event indicating the sending of data occurs before the external event.

B.3.3 External Event of a Sensor accessed via C/S

In this case the SensorActuatorSwComponentType receives data from the EcuAbstractionSwComponentType or ComplexDeviceDriverSwComponentType through a C/S interface on its required port. Two events TDEventOperation, indicating the receipt of the results of such an operation call, are specified and both referencing the same required port and pointing to the the same ClientServerOperation. The attribute isExternal of one of those events is set to TRUE and the same attribute of the other event is set to FALSE.

The semantics of the external event is that it occurs at the hardware level. The semantics of the other event is that it indicates the receipt of the data via the corresponding required port of the SensorActuatorSwComponentType. And the notion is that the external event occurs before the event indicating the receipt of the result of the operation call.

B.3.4 External Event of an Actuator accessed via C/S

In this case the SensorActuatorSwComponentType sends data to the EcuAbstractionSwComponentType or ComplexDeviceDriverSwComponentType through a C/S interface on its required port.

Two events TDEventOperation, indicating the invocation of the such an operation call, are specified and both referencing the same required port and pointing to the the same ClientServerOperation. The attribute isExternal of one of those events is set to TRUE and the same attribute of the other event is set to FALSE.

The semantics of the external event is that it occurs at the hardware level. The semantics of the other event is that it indicates the receipt of the data via the corresponding required port of the SensorActuatorSwComponentType. And the notion is that the event indicating the invocation of the operation occurs before the external event.

B.3.5 Considering hardware I/O latency of EventChains at VFB-level

To express an end-to-end sensor or actuator timing description event chain that also comprises hardware related latencies, already at VFB level, it is necessary to set the attribute isExternal of the stimulus and/or response accordingly. The overall end-to-end timing description event chain thus also comprises the ”Input Latency” and/or the ”Output Latency”.

B.3.5.1 Input latency

The input latency is defined as the time latency between the point in time where the data is generated by a hardware I/O (e.g. a physical sensor) and the point in time where it is available for the application component, e.g. a SensorActuatorSwComponentType. The input latency is the time between the two events described in B.3.1 and B.3.3, respectively, depending on the communication type.

B.3.5.2 Output latency

The output latency is defined as the time latency between the point in time where the data is sent by the application component, e.g. a SensorActuatorSwComponentType, and the point in time where it is consumed by a hardware I/O (e.g. a physical actuator). The output latency is the time between the two events described in B.3.2 and B.3.4, respectively, depending on the communication type.

B.3.6 Constraining Input or Output Latency

The input or output latency can, for example, be modeled as event chain playing the role of a segment of the overall end-to-end chain. The overall end-to-end chain and also the input and output event chain segments can have attached timing constraints. This way either the overall end-to-end timing behavior or only the input and output behavior including hardware delay can be constrained already at VFB-level.

C ARXML Listings

The content of this appendix chapter is *informative* in nature and shall **not** be considered as *normative* content.

This chapter contains a collection of selected examples that reflect concepts described in different chapters of this document.

C.1 Variant Handling

Sometimes it is necessary to specify that there are several alternatives with regard to timing requirements. For example, quite often it is reasonable to specify that a runnable entity shall be periodically activated either at 1ms, 2ms, 5ms, 8ms, or 10ms. In other words, it is perfectly fine to decide that the runnable entity is activated every 8ms. Indeed, it is allowed to activate the runnable entity either at: 1ms, 2ms, 5ms, 8ms, or 10ms. Hence, there should be a means to specify such time sets which contain all allowed timings, like in case of activating a runnable entity at {1, 2, 5, 8, 10} ms.

For the purpose of specifying time sets the timing extensions utilize the `Variant Handling` capabilities specified and described in [9] Chapter 7 *"Variant Handling"*.

As shown in Figure C.1 a SWC called `PlainVanillaSwc` consists of one runnable entity named `RunnableEntityOne`. This runnable entity calculates the value of the variable `DataElementTwo` based on the value of the variable `DataElementOne`.

The latter variable is received via the required port called `rPortOne` and the former one is written to the provided port named `pPortOne`. In the example three alternatives for activating the runnable entity are specified and shown in the table on the right hand side in Figure C.1.

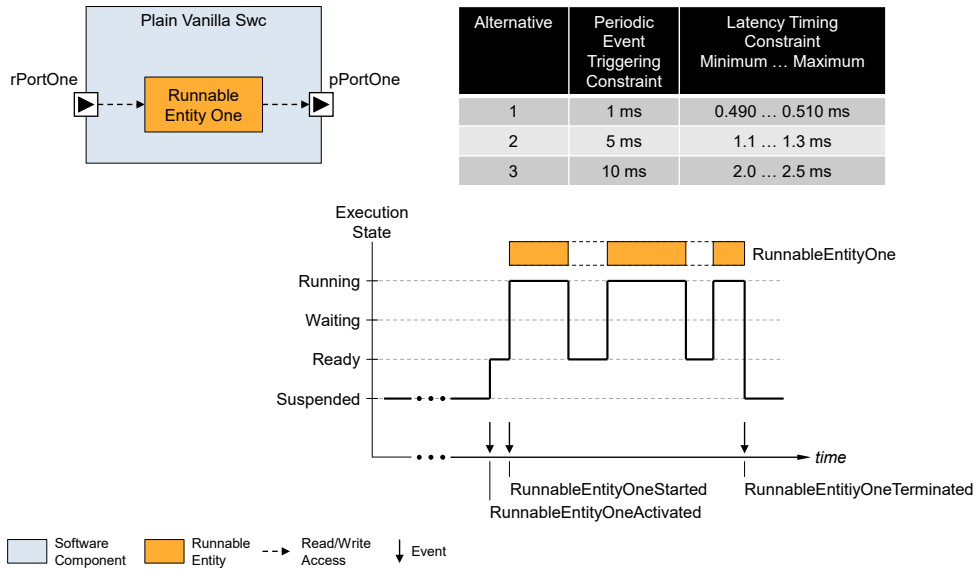

Figure C.1: Example of a set of timings specified for a Runnable Entity.

In listing C.1, the SwcTiming called swctPlainVanillaSwc specifies the timing descriptions and timing requirements. The timing descriptions describe the events that are related to the runnable entity of a SWC PlainVanillaSwc, in particular the activation event RunnableEntityOneActivated, start event RunnableEntityOneStarted and termination event RunnableEntityOneTerminated of the runnable entity RunnableEntityOne. In addition, a timing description event chain CalculateValueOfDataElementTwo is specified that describes the causal relationship between the events RunnableEntityOneActivated and RunnableEntityOneTerminated.

The timing requirements specify three variants of the periodic event triggering constraint named PeriodicActivationRunnableEntityOne describing the *periodic* activation of the runnable entity RunnableEntityOne. The following alternatives are specified: 1ms, 5ms and 10ms. In addition, three alternatives for latency timing constraints, named ResponseTimeForCalculatingDataElementTwo, are specified that are imposed on the response time of the runnable entity. Technically, the scope of this timing constraint is the event chain CalculateValueOfDataElementTwo mentioned before.

The system constant called ScTimingRunnableEntityOne that eventually is used to select the specific variant of the required timing - the activation frequency and response time of the runnable entity. The selected variant is specified by the system constant's value in the SwSystemconstantValueSet. In the given example the first variant Timing1 is selected.

```
<AR-PACKAGE>
  <SHORT-NAME>TimingExtensions</SHORT-NAME>
  <ELEMENTS>
    <SWC-TIMING>
      <SHORT-NAME>swctPlainVanillaSwc</SHORT-NAME>
      <TIMING-DESCRIPTIONS>
        <TD-EVENT-SWC-INTERNAL-BEHAVIOR>
          <SHORT-NAME>RunnableEntityOneActivated</SHORT-NAME>
          <RUNNABLE-REF DEST="RUNNABLE-ENTITY">/TimeSetExample/PlainVanillaSwc/InternalBehaviorPlainVanillaSwc/
              RunnableEntityOne</RUNNABLE-REF>
          <TD-EVENT-SWC-INTERNAL-BEHAVIOR-TYPE>RUNNABLE-ENTITY-ACTIVATED</TD-EVENT-SWC-INTERNAL-BEHAVIOR-TYPE>
        </TD-EVENT-SWC-INTERNAL-BEHAVIOR>
        <TD-EVENT-SWC-INTERNAL-BEHAVIOR>
          <SHORT-NAME>RunnableEntityOneTerminated</SHORT-NAME>
          <RUNNABLE-REF DEST="RUNNABLE-ENTITY">/TimeSetExample/PlainVanillaSwc/InternalBehaviorPlainVanillaSwc/
              RunnableEntityOne</RUNNABLE-REF>
          <TD-EVENT-SWC-INTERNAL-BEHAVIOR-TYPE>RUNNABLE-ENTITY-TERMINATED</TD-EVENT-SWC-INTERNAL-BEHAVIOR-TYPE>
        </TD-EVENT-SWC-INTERNAL-BEHAVIOR>
        <TIMING-DESCRIPTION-EVENT-CHAIN>
          <SHORT-NAME>CalculateValueOfDataElementTwo</SHORT-NAME>
          <STIMULUS-REF DEST="TD-EVENT-SWC-INTERNAL-BEHAVIOR">/TimingExtensions/swctPlainVanillaSwc/
              RunnableEntityOneActivated</STIMULUS-REF>
          <RESPONSE-REF DEST="TD-EVENT-SWC-INTERNAL-BEHAVIOR">/TimingExtensions/swctPlainVanillaSwc/
              RunnableEntityOneTerminated</RESPONSE-REF>
        </TIMING-DESCRIPTION-EVENT-CHAIN>
      </TIMING-DESCRIPTIONS>
      <TIMING-REQUIREMENTS>
        <PERIODIC-EVENT-TRIGGERING>
          <SHORT-NAME>PeriodicActivationRunnableEntityOne</SHORT-NAME>
          <VARIATION-POINT>
            <SHORT-LABEL>VpPetTiming1</SHORT-LABEL>
            <SW-SYSCOND BINDING-TIME="SYSTEM-DESIGN-TIME">(<SYSC-REF DEST="SW-SYSTEMCONST">/SystemConstants/
                ScTimingRunnableEntityOne</SYSC-REF>==1)</SW-SYSCOND>
          </VARIATION-POINT>
          <EVENT-REF DEST="TD-EVENT-SWC-INTERNAL-BEHAVIOR">/TimingExtensions/swctPlainVanillaSwc/
              RunnableEntityOneActivated</EVENT-REF>
          <PERIOD>
            <CSE-CODE>3</CSE-CODE>
            <CSE-CODE-FACTOR>1</CSE-CODE-FACTOR>
          </PERIOD>
        </PERIODIC-EVENT-TRIGGERING>
        <PERIODIC-EVENT-TRIGGERING>
          <SHORT-NAME>PeriodicActivationRunnableEntityOne</SHORT-NAME>
          <VARIATION-POINT>
            <SHORT-LABEL>VpPetTiming2</SHORT-LABEL>
            <SW-SYSCOND BINDING-TIME="SYSTEM-DESIGN-TIME">(<SYSC-REF DEST="SW-SYSTEMCONST">/SystemConstants/
                ScTimingRunnableEntityOne</SYSC-REF>==2)</SW-SYSCOND>
          </VARIATION-POINT>
```

```
        <EVENT-REF DEST="TD-EVENT-SWC-INTERNAL-BEHAVIOR">/TimingExtensions/swctPlainVanillaSwc/
            RunnableEntityOneActivated</EVENT-REF>
        <PERIOD>
          <CSE-CODE>3</CSE-CODE>
          <CSE-CODE-FACTOR>5</CSE-CODE-FACTOR>
        </PERIOD>
      </PERIODIC-EVENT-TRIGGERING>
      <PERIODIC-EVENT-TRIGGERING>
        <SHORT-NAME>PeriodicActivationRunnableEntityOne</SHORT-NAME>
        <VARIATION-POINT>
          <SHORT-LABEL>VpPetTiming3</SHORT-LABEL>
          <SW-SYSCOND BINDING-TIME="SYSTEM-DESIGN-TIME">(<SYSC-REF DEST="SW-SYSTEMCONST">/SystemConstants/
              ScTimingRunnableEntityOne</SYSC-REF>==3)</SW-SYSCOND>
        </VARIATION-POINT>
        <EVENT-REF DEST="TD-EVENT-SWC-INTERNAL-BEHAVIOR">/TimingExtensions/swctPlainVanillaSwc/
            RunnableEntityOneActivated</EVENT-REF>
        <PERIOD>
          <CSE-CODE>3</CSE-CODE>
          <CSE-CODE-FACTOR>10</CSE-CODE-FACTOR>
        </PERIOD>
      </PERIODIC-EVENT-TRIGGERING>
      <LATENCY-TIMING-CONSTRAINT>
        <SHORT-NAME>ResponseTimeForCalculatingDataElementTwo</SHORT-NAME>
        <VARIATION-POINT>
          <SHORT-LABEL>VpLtcTiming1</SHORT-LABEL>
          <SW-SYSCOND BINDING-TIME="SYSTEM-DESIGN-TIME">(<SYSC-REF DEST="SW-SYSTEMCONST">/SystemConstants/
              ScTimingRunnableEntityOne</SYSC-REF>==1)</SW-SYSCOND>
        </VARIATION-POINT>
        <LATENCY-CONSTRAINT-TYPE>REACTION</LATENCY-CONSTRAINT-TYPE>
        <SCOPE-REF DEST="TIMING-DESCRIPTION-EVENT-CHAIN">/TimingExtensions/swctPlainVanillaSwc/
            CalculateValueOfDataElementTwo</SCOPE-REF>
        <MINIMUM>
          <CSE-CODE>2</CSE-CODE>
          <CSE-CODE-FACTOR>490</CSE-CODE-FACTOR>
        </MINIMUM>
        <MAXIMUM>
          <CSE-CODE>2</CSE-CODE>
          <CSE-CODE-FACTOR>510</CSE-CODE-FACTOR>
        </MAXIMUM>
      </LATENCY-TIMING-CONSTRAINT>
      <LATENCY-TIMING-CONSTRAINT>
        <SHORT-NAME>ResponseTimeForCalculatingDataElementTwo</SHORT-NAME>
        <VARIATION-POINT>
          <SHORT-LABEL>VpLtcTiming2</SHORT-LABEL>
          <SW-SYSCOND BINDING-TIME="SYSTEM-DESIGN-TIME">(<SYSC-REF DEST="SW-SYSTEMCONST">/SystemConstants/
              ScTimingRunnableEntityOne</SYSC-REF>==2)</SW-SYSCOND>
        </VARIATION-POINT>
        <LATENCY-CONSTRAINT-TYPE>REACTION</LATENCY-CONSTRAINT-TYPE>
        <SCOPE-REF DEST="TIMING-DESCRIPTION-EVENT-CHAIN">/TimingExtensions/swctPlainVanillaSwc/
            CalculateValueOfDataElementTwo</SCOPE-REF>
        <MINIMUM>
          <CSE-CODE>2</CSE-CODE>
          <CSE-CODE-FACTOR>1100</CSE-CODE-FACTOR>
        </MINIMUM>
        <MAXIMUM>
          <CSE-CODE>2</CSE-CODE>
          <CSE-CODE-FACTOR>1300</CSE-CODE-FACTOR>
        </MAXIMUM>
      </LATENCY-TIMING-CONSTRAINT>
      <LATENCY-TIMING-CONSTRAINT>
        <SHORT-NAME>ResponseTimeForCalculatingDataElementTwo</SHORT-NAME>
        <VARIATION-POINT>
          <SHORT-LABEL>VpLtcTiming3</SHORT-LABEL>
          <SW-SYSCOND BINDING-TIME="SYSTEM-DESIGN-TIME">(<SYSC-REF DEST="SW-SYSTEMCONST">/SystemConstants/
              ScTimingRunnableEntityOne</SYSC-REF>==3)</SW-SYSCOND>
        </VARIATION-POINT>
        <LATENCY-CONSTRAINT-TYPE>REACTION</LATENCY-CONSTRAINT-TYPE>
        <SCOPE-REF DEST="TIMING-DESCRIPTION-EVENT-CHAIN">/TimingExtensions/swctPlainVanillaSwc/
            CalculateValueOfDataElementTwo</SCOPE-REF>
        <MINIMUM>
          <CSE-CODE>2</CSE-CODE>
          <CSE-CODE-FACTOR>2000</CSE-CODE-FACTOR>
        </MINIMUM>
        <MAXIMUM>
          <CSE-CODE>2</CSE-CODE>
          <CSE-CODE-FACTOR>2500</CSE-CODE-FACTOR>
        </MAXIMUM>
      </LATENCY-TIMING-CONSTRAINT>
    </TIMING-REQUIREMENTS>
    <BEHAVIOR-REF DEST="SWC-INTERNAL-BEHAVIOR">/TimeSetExample/PlainVanillaSwc/InternalBehaviorPlainVanillaSwc</BEHAVIOR
        -REF>
  </SWC-TIMING>
 </ELEMENTS>
</AR-PACKAGE>
<AR-PACKAGE>
 <SHORT-NAME>SystemConstants</SHORT-NAME>
 <ELEMENTS>
  <SW-SYSTEMCONST>
   <SHORT-NAME>ScTimingRunnableEntityOne</SHORT-NAME>
  </SW-SYSTEMCONST>
 </ELEMENTS>
</AR-PACKAGE>
<AR-PACKAGE>
 <SHORT-NAME>Variants</SHORT-NAME>
 <ELEMENTS>
```

```
    <SW-SYSTEMCONSTANT-VALUE-SET>
      <SHORT-NAME>TIMEX_EXP_Time_Set_VariantValues</SHORT-NAME>
      <SW-SYSTEMCONSTANT-VALUES>
        <SW-SYSTEMCONST-VALUE>
          <!-- The values of the system constant ScTimingRunnableEntityOne may range from 1 to 3. -->
          <SW-SYSTEMCONST-REF DEST="SW-SYSTEMCONST">/SystemConstants/ScTimingRunnableEntityOne</SW-SYSTEMCONST-REF>
          <VALUE>1</VALUE>
        </SW-SYSTEMCONST-VALUE>
      </SW-SYSTEMCONSTANT-VALUES>
    </SW-SYSTEMCONSTANT-VALUE-SET>
    <POST-BUILD-VARIANT-CRITERION-VALUE-SET>
      <SHORT-NAME>TIMEX_EXP_Time_Set_VariantPostBuildValues</SHORT-NAME>
    </POST-BUILD-VARIANT-CRITERION-VALUE-SET>
    <PREDEFINED-VARIANT>
      <SHORT-NAME>TIMEX_EXP_Time_Set_Variant</SHORT-NAME>
      <POST-BUILD-VARIANT-CRITERION-VALUE-SET-REFS>
        <POST-BUILD-VARIANT-CRITERION-VALUE-SET-REF DEST="POST-BUILD-VARIANT-CRITERION-VALUE-SET">/Variants/
          TIMEX_EXP_Time_Set_VariantPostBuildValues</POST-BUILD-VARIANT-CRITERION-VALUE-SET-REF>
      </POST-BUILD-VARIANT-CRITERION-VALUE-SET-REFS>
      <SW-SYSTEMCONSTANT-VALUE-SET-REFS>
        <SW-SYSTEMCONSTANT-VALUE-SET-REF DEST="SW-SYSTEMCONSTANT-VALUE-SET">/Variants/TIMEX_EXP_Time_Set_VariantValues</SW
          -SYSTEMCONSTANT-VALUE-SET-REF>
      </SW-SYSTEMCONSTANT-VALUE-SET-REFS>
    </PREDEFINED-VARIANT>
  </ELEMENTS>
</AR-PACKAGE>
```

Listing C.1: ARXML for Variant Handling

C.2 Logical Execution Time

C.2.1 Logical Execution Time - Timing descriptions

```
<TIMING-DESCRIPTIONS> <!-- START: caption={Specifying LET Interval}, label={list:specifyingLetInterval} -->
  <TD-EVENT-COMPLEX>
    <SHORT-NAME>LetIntervalRelease</SHORT-NAME>
    <CATEGORY>LET_RELEASE</CATEGORY>
  </TD-EVENT-COMPLEX>
  <TD-EVENT-COMPLEX>
    <SHORT-NAME>LetIntervalTerminate</SHORT-NAME>
    <CATEGORY>LET_TERMINATE</CATEGORY>
  </TD-EVENT-COMPLEX>
  <TIMING-DESCRIPTION-EVENT-CHAIN>
    <SHORT-NAME>tdecLetInterval</SHORT-NAME>
    <CATEGORY>LET_INTERVAL</CATEGORY>
    <STIMULUS-REF DEST="TD-EVENT-COMPLEX">/LogicalExecutionTime/TimingExtensions/LogicalExecutionTime02/
      LetIntervalRelease</STIMULUS-REF>
    <RESPONSE-REF DEST="TD-EVENT-COMPLEX">/LogicalExecutionTime/TimingExtensions/LogicalExecutionTime02/
      LetIntervalTerminate</RESPONSE-REF>
  </TIMING-DESCRIPTION-EVENT-CHAIN>
</TIMING-DESCRIPTIONS> <!-- END: caption={Specifying LET Interval}, label={list:specifyingLetInterval} -->
```

Listing C.2: Specifying LET Interval

C.2.2 Logical Execution Time - Timing constraints - Latency Timing

```
<LATENCY-TIMING-CONSTRAINT> <!-- START: caption={Specifying LET Interval Timing}, label={
    list:specifyingLetIntervalTiming} -->
  <SHORT-NAME>ltcLetInterval</SHORT-NAME>
  <CATEGORY>LET_INTERVAL</CATEGORY>
  <LATENCY-CONSTRAINT-TYPE>REACTION</LATENCY-CONSTRAINT-TYPE>
  <SCOPE-REF DEST="TIMING-DESCRIPTION-EVENT-CHAIN">/LogicalExecutionTime/TimingExtensions/
    LogicalExecutionTime02/tdecLetInterval</SCOPE-REF>
  <MINIMUM>
    <CSE-CODE>3</CSE-CODE>
    <CSE-CODE-FACTOR>10</CSE-CODE-FACTOR>
  </MINIMUM>
  <MAXIMUM>
    <CSE-CODE>3</CSE-CODE>
    <CSE-CODE-FACTOR>10</CSE-CODE-FACTOR>
  </MAXIMUM>
</LATENCY-TIMING-CONSTRAINT> <!-- END: caption={Specifying LET Interval Timing}, label={
    list:specifyingLetIntervalTiming} -->
```

Listing C.3: Specifying LET Interval Timing

C.2.3 Logical Execution Time - Timing constraints - Event Triggering

```
<PERIODIC-EVENT-TRIGGERING> <!-- START: caption={Specifying Recurrence of a LET Interval}, label={
    list:specifyingRecurrenceOfLetInterval} -->
  <SHORT-NAME>petcLetIntervalRecurrence</SHORT-NAME>
  <EVENT-REF DEST="TD-EVENT-COMPLEX">/LogicalExecutionTime/TimingExtensions/LogicalExecutionTime02/
      LetIntervalRelease</EVENT-REF>
  <MINIMUM-INTER-ARRIVAL-TIME>
    <CSE-CODE>3</CSE-CODE>
    <CSE-CODE-FACTOR>10</CSE-CODE-FACTOR>
  </MINIMUM-INTER-ARRIVAL-TIME>
  <JITTER>
    <CSE-CODE>3</CSE-CODE>
    <CSE-CODE-FACTOR>0</CSE-CODE-FACTOR>
  </JITTER>
  <PERIOD>
    <CSE-CODE>3</CSE-CODE>
    <CSE-CODE-FACTOR>10</CSE-CODE-FACTOR>
  </PERIOD>
</PERIODIC-EVENT-TRIGGERING> <!-- END: caption={Specifying Recurrence of a LET Interval}, label={
    list:specifyingRecurrenceOfLetInterval} -->
```

Listing C.4: Specifying Recurrence of a LET Interval

C.2.4 Logical Execution Time - Timing constraints - Event Triggering - Gap

```
<TIMING-REQUIREMENTS> <!-- START: caption={Periodic LET Interval with Gap}, label={
    list:specifyingPeriodicLetIntervalsWithGap} -->
  <LATENCY-TIMING-CONSTRAINT>
    <SHORT-NAME>ltcLetInterval_1</SHORT-NAME>
    <CATEGORY>LET_INTERVAL</CATEGORY>
    <LATENCY-CONSTRAINT-TYPE>REACTION</LATENCY-CONSTRAINT-TYPE>
    <SCOPE-REF DEST="TIMING-DESCRIPTION-EVENT-CHAIN">/SpecifyingPeriodicLetIntervalWithGap/
        sysTiming_SpecifyingPeriodicLetIntervalWithGap/tdecLetInterval_1</SCOPE-REF>
    <MINIMUM>
      <CSE-CODE>3</CSE-CODE>
      <CSE-CODE-FACTOR>6</CSE-CODE-FACTOR>
    </MINIMUM>
    <MAXIMUM>
      <CSE-CODE>3</CSE-CODE>
      <CSE-CODE-FACTOR>6</CSE-CODE-FACTOR>
    </MAXIMUM>
  </LATENCY-TIMING-CONSTRAINT>
  <PERIODIC-EVENT-TRIGGERING>
    <SHORT-NAME>petcLetInterval_1</SHORT-NAME>
    <MINIMUM-INTER-ARRIVAL-TIME>
      <CSE-CODE>3</CSE-CODE>
      <CSE-CODE-FACTOR>10</CSE-CODE-FACTOR>
    </MINIMUM-INTER-ARRIVAL-TIME>
    <JITTER>
      <CSE-CODE>3</CSE-CODE>
      <CSE-CODE-FACTOR>0</CSE-CODE-FACTOR>
    </JITTER>
    <PERIOD>
      <CSE-CODE>3</CSE-CODE>
      <CSE-CODE-FACTOR>10</CSE-CODE-FACTOR>
    </PERIOD>
  </PERIODIC-EVENT-TRIGGERING>
</TIMING-REQUIREMENTS> <!-- END: caption={Periodic LET Interval with Gap}, label={
    list:specifyingPeriodicLetIntervalsWithGap} -->
```

Listing C.5: Periodic LET Interval with Gap

C.2.5 Logical Execution Time - Timing constraints - Offset Timing - Without

```
<OFFSET-TIMING-CONSTRAINT>
  <SHORT-NAME>otc_LetInterval_2</SHORT-NAME>
  <SOURCE-REF DEST="TD-EVENT-COMPLEX">/SpecifyingPeriodicLetIntervalsWithNoOffset/
      sysTiming_SpecifyingPeriodicLetIntervalsWithNoOffset/LetIntervalRelease_1</SOURCE-REF>
  <TARGET-REF DEST="TD-EVENT-COMPLEX">/SpecifyingPeriodicLetIntervalsWithNoOffset/
      sysTiming_SpecifyingPeriodicLetIntervalsWithNoOffset/LetIntervalRelease_2</TARGET-REF>
  <MINIMUM>
    <CSE-CODE>2</CSE-CODE>
    <CSE-CODE-FACTOR>0</CSE-CODE-FACTOR>
  </MINIMUM>
  <MAXIMUM>
    <CSE-CODE>2</CSE-CODE>
    <CSE-CODE-FACTOR>0</CSE-CODE-FACTOR>
  </MAXIMUM>
</OFFSET-TIMING-CONSTRAINT>
<OFFSET-TIMING-CONSTRAINT>
  <SHORT-NAME>otc_LetInterval_3</SHORT-NAME>
  <SOURCE-REF DEST="TD-EVENT-COMPLEX">/SpecifyingPeriodicLetIntervalsWithNoOffset/
      sysTiming_SpecifyingPeriodicLetIntervalsWithNoOffset/LetIntervalRelease_1</SOURCE-REF>
  <TARGET-REF DEST="TD-EVENT-COMPLEX">/SpecifyingPeriodicLetIntervalsWithNoOffset/
      sysTiming_SpecifyingPeriodicLetIntervalsWithNoOffset/LetIntervalRelease_3</TARGET-REF>
  <MINIMUM>
    <CSE-CODE>2</CSE-CODE>
    <CSE-CODE-FACTOR>0</CSE-CODE-FACTOR>
  </MINIMUM>
```

```
  <MAXIMUM>
    <CSE-CODE>2</CSE-CODE>
    <CSE-CODE-FACTOR>0</CSE-CODE-FACTOR>
  </MAXIMUM>
</OFFSET-TIMING-CONSTRAINT>
```

Listing C.6: Periodic LET Intervals with no Offset

C.2.6 Logical Execution Time - Timing constraints - Offset Timing - With

```
<OFFSET-TIMING-CONSTRAINT>
  <SHORT-NAME>otc_LetInterval_2</SHORT-NAME>
  <SOURCE-REF DEST="TD-EVENT-COMPLEX">/SpecifyingPeriodicLetIntervalsWithOffset/
     sysTiming_SpecifyingPeriodicLetIntervalsWithOffset/LetIntervalRelease_1</SOURCE-REF>
  <TARGET-REF DEST="TD-EVENT-COMPLEX">/SpecifyingPeriodicLetIntervalsWithOffset/
     sysTiming_SpecifyingPeriodicLetIntervalsWithOffset/LetIntervalRelease_2</TARGET-REF>
  <MINIMUM>
    <CSE-CODE>2</CSE-CODE>
    <CSE-CODE-FACTOR>25</CSE-CODE-FACTOR>
  </MINIMUM>
  <MAXIMUM>
    <CSE-CODE>2</CSE-CODE>
    <CSE-CODE-FACTOR>25</CSE-CODE-FACTOR>
  </MAXIMUM>
</OFFSET-TIMING-CONSTRAINT>
<OFFSET-TIMING-CONSTRAINT>
  <SHORT-NAME>otc_LetInterval_3</SHORT-NAME>
  <SOURCE-REF DEST="TD-EVENT-COMPLEX">/SpecifyingPeriodicLetIntervalsWithOffset/
     sysTiming_SpecifyingPeriodicLetIntervalsWithOffset/LetIntervalRelease_1</SOURCE-REF>
  <TARGET-REF DEST="TD-EVENT-COMPLEX">/SpecifyingPeriodicLetIntervalsWithOffset/
     sysTiming_SpecifyingPeriodicLetIntervalsWithOffset/LetIntervalRelease_3</TARGET-REF>
  <MINIMUM>
    <CSE-CODE>2</CSE-CODE>
    <CSE-CODE-FACTOR>75</CSE-CODE-FACTOR>
  </MINIMUM>
  <MAXIMUM>
    <CSE-CODE>2</CSE-CODE>
    <CSE-CODE-FACTOR>75</CSE-CODE-FACTOR>
  </MAXIMUM>
</OFFSET-TIMING-CONSTRAINT>
```

Listing C.7: Periodic LET Intervals with Offset

C.2.7 Logical Execution Time - Timing constraints - Offset Timing - Arbitrary

```
<OFFSET-TIMING-CONSTRAINT>
  <SHORT-NAME>otc_LetInterval_2</SHORT-NAME>
  <SOURCE-REF DEST="TD-EVENT-COMPLEX">/SpecifyingArbitraryLetIntervals/sysTiming_SpecifyingArbitraryLetIntervals/
     LetIntervalRelease_1</SOURCE-REF>
  <TARGET-REF DEST="TD-EVENT-COMPLEX">/SpecifyingArbitraryLetIntervals/sysTiming_SpecifyingArbitraryLetIntervals/
     LetIntervalRelease_2</TARGET-REF>
  <MINIMUM>
    <CSE-CODE>3</CSE-CODE>
    <CSE-CODE-FACTOR>2</CSE-CODE-FACTOR>
  </MINIMUM>
  <MAXIMUM>
    <CSE-CODE>3</CSE-CODE>
    <CSE-CODE-FACTOR>2</CSE-CODE-FACTOR>
  </MAXIMUM>
</OFFSET-TIMING-CONSTRAINT>
<OFFSET-TIMING-CONSTRAINT>
  <SHORT-NAME>otc_LetInterval_3</SHORT-NAME>
  <SOURCE-REF DEST="TD-EVENT-COMPLEX">/SpecifyingArbitraryLetIntervals/sysTiming_SpecifyingArbitraryLetIntervals/
     LetIntervalRelease_1</SOURCE-REF>
  <TARGET-REF DEST="TD-EVENT-COMPLEX">/SpecifyingArbitraryLetIntervals/sysTiming_SpecifyingArbitraryLetIntervals/
     LetIntervalRelease_3</TARGET-REF>
  <MINIMUM>
    <CSE-CODE>3</CSE-CODE>
    <CSE-CODE-FACTOR>8</CSE-CODE-FACTOR>
  </MINIMUM>
  <MAXIMUM>
    <CSE-CODE>3</CSE-CODE>
    <CSE-CODE-FACTOR>8</CSE-CODE-FACTOR>
  </MAXIMUM>
</OFFSET-TIMING-CONSTRAINT>
<OFFSET-TIMING-CONSTRAINT>
  <SHORT-NAME>otc_LetInterval_4</SHORT-NAME>
  <SOURCE-REF DEST="TD-EVENT-COMPLEX">/SpecifyingArbitraryLetIntervals/sysTiming_SpecifyingArbitraryLetIntervals/
     LetIntervalRelease_1</SOURCE-REF>
  <TARGET-REF DEST="TD-EVENT-COMPLEX">/SpecifyingArbitraryLetIntervals/sysTiming_SpecifyingArbitraryLetIntervals/
     LetIntervalRelease_4</TARGET-REF>
  <MINIMUM>
    <CSE-CODE>3</CSE-CODE>
    <CSE-CODE-FACTOR>9</CSE-CODE-FACTOR>
  </MINIMUM>
  <MAXIMUM>
    <CSE-CODE>3</CSE-CODE>
    <CSE-CODE-FACTOR>9</CSE-CODE-FACTOR>
```

```
    </MAXIMUM>
  </OFFSET-TIMING-CONSTRAINT>
  <OFFSET-TIMING-CONSTRAINT>
    <SHORT-NAME>otc_LetInterval_5</SHORT-NAME>
    <SOURCE-REF DEST="TD-EVENT-COMPLEX">/SpecifyingArbitraryLetIntervals/sysTiming_SpecifyingArbitraryLetIntervals/
        LetIntervalRelease_1</SOURCE-REF>
    <TARGET-REF DEST="TD-EVENT-COMPLEX">/SpecifyingArbitraryLetIntervals/sysTiming_SpecifyingArbitraryLetIntervals/
        LetIntervalRelease_5</TARGET-REF>
    <MINIMUM>
      <CSE-CODE>3</CSE-CODE>
      <CSE-CODE-FACTOR>18</CSE-CODE-FACTOR>
    </MINIMUM>
    <MAXIMUM>
      <CSE-CODE>3</CSE-CODE>
      <CSE-CODE-FACTOR>18</CSE-CODE-FACTOR>
    </MAXIMUM>
  </OFFSET-TIMING-CONSTRAINT>
  <OFFSET-TIMING-CONSTRAINT>
    <SHORT-NAME>otc_LetInterval_6</SHORT-NAME>
    <SOURCE-REF DEST="TD-EVENT-COMPLEX">/SpecifyingArbitraryLetIntervals/sysTiming_SpecifyingArbitraryLetIntervals/
        LetIntervalRelease_1</SOURCE-REF>
    <TARGET-REF DEST="TD-EVENT-COMPLEX">/SpecifyingArbitraryLetIntervals/sysTiming_SpecifyingArbitraryLetIntervals/
        LetIntervalRelease_6</TARGET-REF>
    <MINIMUM>
      <CSE-CODE>3</CSE-CODE>
      <CSE-CODE-FACTOR>24</CSE-CODE-FACTOR>
    </MINIMUM>
    <MAXIMUM>
      <CSE-CODE>3</CSE-CODE>
      <CSE-CODE-FACTOR>24</CSE-CODE-FACTOR>
    </MAXIMUM>
  </OFFSET-TIMING-CONSTRAINT>
  <OFFSET-TIMING-CONSTRAINT>
    <SHORT-NAME>otc_LetInterval_7</SHORT-NAME>
    <SOURCE-REF DEST="TD-EVENT-COMPLEX">/SpecifyingArbitraryLetIntervals/sysTiming_SpecifyingArbitraryLetIntervals/
        LetIntervalRelease_1</SOURCE-REF>
    <TARGET-REF DEST="TD-EVENT-COMPLEX">/SpecifyingArbitraryLetIntervals/sysTiming_SpecifyingArbitraryLetIntervals/
        LetIntervalRelease_7</TARGET-REF>
    <MINIMUM>
      <CSE-CODE>3</CSE-CODE>
      <CSE-CODE-FACTOR>29</CSE-CODE-FACTOR>
    </MINIMUM>
    <MAXIMUM>
      <CSE-CODE>3</CSE-CODE>
      <CSE-CODE-FACTOR>29</CSE-CODE-FACTOR>
    </MAXIMUM>
  </OFFSET-TIMING-CONSTRAINT>
  <OFFSET-TIMING-CONSTRAINT>
    <SHORT-NAME>otc_LetInterval_8</SHORT-NAME>
    <SOURCE-REF DEST="TD-EVENT-COMPLEX">/SpecifyingArbitraryLetIntervals/sysTiming_SpecifyingArbitraryLetIntervals/
        LetIntervalRelease_1</SOURCE-REF>
    <TARGET-REF DEST="TD-EVENT-COMPLEX">/SpecifyingArbitraryLetIntervals/sysTiming_SpecifyingArbitraryLetIntervals/
        LetIntervalRelease_8</TARGET-REF>
    <MINIMUM>
      <CSE-CODE>3</CSE-CODE>
      <CSE-CODE-FACTOR>31</CSE-CODE-FACTOR>
    </MINIMUM>
    <MAXIMUM>
      <CSE-CODE>3</CSE-CODE>
      <CSE-CODE-FACTOR>31</CSE-CODE-FACTOR>
    </MAXIMUM>
  </OFFSET-TIMING-CONSTRAINT>
```

Listing C.8: Arbitrary LET Intervals

C.2.8 Logical Execution Time - Timing constraints - Offset Timing - Arbitrary Overlap

```
  <OFFSET-TIMING-CONSTRAINT>
    <SHORT-NAME>otc_LetInterval_2</SHORT-NAME>
    <SOURCE-REF DEST="TD-EVENT-COMPLEX">/SpecifyingArbitraryLetIntervalsWithOverlap/
        sysTiming_SpecifyingArbitraryLetIntervalsWithOverlap/LetIntervalRelease_1</SOURCE-REF>
    <TARGET-REF DEST="TD-EVENT-COMPLEX">/SpecifyingArbitraryLetIntervalsWithOverlap/
        sysTiming_SpecifyingArbitraryLetIntervalsWithOverlap/LetIntervalRelease_2</TARGET-REF>
    <MINIMUM>
      <CSE-CODE>3</CSE-CODE>
      <CSE-CODE-FACTOR>13</CSE-CODE-FACTOR>
    </MINIMUM>
    <MAXIMUM>
      <CSE-CODE>3</CSE-CODE>
      <CSE-CODE-FACTOR>13</CSE-CODE-FACTOR>
    </MAXIMUM>
  </OFFSET-TIMING-CONSTRAINT>
  <OFFSET-TIMING-CONSTRAINT>
    <SHORT-NAME>otc_LetInterval_3</SHORT-NAME>
    <SOURCE-REF DEST="TD-EVENT-COMPLEX">/SpecifyingArbitraryLetIntervalsWithOverlap/
        sysTiming_SpecifyingArbitraryLetIntervalsWithOverlap/LetIntervalRelease_1</SOURCE-REF>
    <TARGET-REF DEST="TD-EVENT-COMPLEX">/SpecifyingArbitraryLetIntervalsWithOverlap/
        sysTiming_SpecifyingArbitraryLetIntervalsWithOverlap/LetIntervalRelease_3</TARGET-REF>
    <MINIMUM>
      <CSE-CODE>3</CSE-CODE>
```

```
      <CSE-CODE-FACTOR>4</CSE-CODE-FACTOR>
    </MINIMUM>
    <MAXIMUM>
      <CSE-CODE>3</CSE-CODE>
      <CSE-CODE-FACTOR>4</CSE-CODE-FACTOR>
    </MAXIMUM>
  </OFFSET-TIMING-CONSTRAINT>
  <OFFSET-TIMING-CONSTRAINT>
    <SHORT-NAME>otc_LetInterval_4</SHORT-NAME>
    <SOURCE-REF DEST="TD-EVENT-COMPLEX">/SpecifyingArbitraryLetIntervalsWithOverlap/
        sysTiming_SpecifyingArbitraryLetIntervalsWithOverlap/LetIntervalRelease_1</SOURCE-REF>
    <TARGET-REF DEST="TD-EVENT-COMPLEX">/SpecifyingArbitraryLetIntervalsWithOverlap/
        sysTiming_SpecifyingArbitraryLetIntervalsWithOverlap/LetIntervalRelease_4</TARGET-REF>
    <MINIMUM>
      <CSE-CODE>3</CSE-CODE>
      <CSE-CODE-FACTOR>3</CSE-CODE-FACTOR>
    </MINIMUM>
    <MAXIMUM>
      <CSE-CODE>3</CSE-CODE>
      <CSE-CODE-FACTOR>3</CSE-CODE-FACTOR>
    </MAXIMUM>
  </OFFSET-TIMING-CONSTRAINT>
```

Listing C.9: Arbitrary LET Intervals with Overlap

C.2.9 Logical Execution Time - Timing constraints - Execution Order

```
<EXECUTION-ORDER-CONSTRAINT>
  <SHORT-NAME>eoc_DefiningAndMappingEecs</SHORT-NAME>
  <!-- <IS-EVENT>true</IS-EVENT> -->
  <ORDERED-ELEMENTS>
    <EOC-EVENT-REF>
      <SHORT-NAME>eocERef_te_re01_Swc01_1ms</SHORT-NAME>
      <EVENT-REF DEST="TIMING-EVENT">/SwComponents/ASWCT01/ibASWCT01/teRe1ASWCT01</EVENT-REF>
    </EOC-EVENT-REF>
    <EOC-EVENT-REF>
      <SHORT-NAME>eocERef_te_re01_Swc02_1ms</SHORT-NAME>
      <EVENT-REF DEST="TIMING-EVENT">/SwComponents/ASWCT02/ibASWCT02/teRe1ASWCT02</EVENT-REF>
    </EOC-EVENT-REF>
    <EOC-EVENT-REF>
      <SHORT-NAME>eocERef_te_re01_Swc03_1ms</SHORT-NAME>
      <EVENT-REF DEST="TIMING-EVENT">/SwComponents/ASWCT03/ibASWCT03/teRe1ASWCT03</EVENT-REF>
    </EOC-EVENT-REF>
    <EOC-EVENT-REF>
      <SHORT-NAME>eocERef_te_re01_Swc04_1ms</SHORT-NAME>
      <EVENT-REF DEST="TIMING-EVENT">/SwComponents/ASWCT04/ibASWCT04/teRe1ASWCT04</EVENT-REF>
    </EOC-EVENT-REF>
    <EOC-EVENT-REF>
      <SHORT-NAME>eocERef_te_re01_Swc05_1ms</SHORT-NAME>
      <EVENT-REF DEST="TIMING-EVENT">/SwComponents/ASWCT05/ibASWCT05/teRe1ASWCT05</EVENT-REF>
    </EOC-EVENT-REF>
    <EOC-EVENT-REF>
      <SHORT-NAME>eocERef_te_re01_Swc06_1ms</SHORT-NAME>
      <EVENT-REF DEST="TIMING-EVENT">/SwComponents/ASWCT06/ibASWCT06/teRe1ASWCT06</EVENT-REF>
    </EOC-EVENT-REF>
    <EOC-EVENT-REF>
      <SHORT-NAME>eocERef_te_re01_Swc07_1ms</SHORT-NAME>
      <EVENT-REF DEST="TIMING-EVENT">/SwComponents/ASWCT07/ibASWCT07/teRe1ASWCT07</EVENT-REF>
    </EOC-EVENT-REF>
    <EOC-EVENT-REF>
      <SHORT-NAME>eocERef_te_re01_Swc08_1ms</SHORT-NAME>
      <EVENT-REF DEST="TIMING-EVENT">/SwComponents/ASWCT08/ibASWCT08/teRe1ASWCT08</EVENT-REF>
    </EOC-EVENT-REF>
    <EOC-EXECUTABLE-ENTITY-REF-GROUP>
      <SHORT-NAME>eocEerg_ExecutableEntitiesCluster_01</SHORT-NAME>
       <LET-INTERVAL-REFS>
        <LET-INTERVAL-REF DEST="TIMING-DESCRIPTION-EVENT-CHAIN">/MappingEecToLetInterval/
            sysTiming_MappingEecToLetInterval/tdecLetInterval_1</LET-INTERVAL-REF>
      </LET-INTERVAL-REFS>
      <NESTED-ELEMENT-REFS>
        <NESTED-ELEMENT-REF DEST="EOC-EVENT-REF">/MappingEecToLetInterval/sysTiming_MappingEecToLetInterval/
            eoc_DefiningAndMappingEecs/eocERef_te_re01_Swc01_1ms</NESTED-ELEMENT-REF>
        <NESTED-ELEMENT-REF DEST="EOC-EVENT-REF">/MappingEecToLetInterval/sysTiming_MappingEecToLetInterval/
            eoc_DefiningAndMappingEecs/eocERef_te_re01_Swc02_1ms</NESTED-ELEMENT-REF>
        <NESTED-ELEMENT-REF DEST="EOC-EVENT-REF">/MappingEecToLetInterval/sysTiming_MappingEecToLetInterval/
            eoc_DefiningAndMappingEecs/eocERef_te_re01_Swc04_1ms</NESTED-ELEMENT-REF>
      </NESTED-ELEMENT-REFS>
      <SUCCESSOR-REFS>
        <SUCCESSOR-REF DEST="EOC-EXECUTABLE-ENTITY-REF-GROUP">/MappingEecToLetInterval/
            sysTiming_MappingEecToLetInterval/eoc_DefiningAndMappingEecs/eocEerg_ExecutableEntitiesCluster_02</
            SUCCESSOR-REF>
        <SUCCESSOR-REF DEST="EOC-EXECUTABLE-ENTITY-REF-GROUP">/MappingEecToLetInterval/
            sysTiming_MappingEecToLetInterval/eoc_DefiningAndMappingEecs/eocEerg_ExecutableEntitiesCluster_03</
            SUCCESSOR-REF>
      </SUCCESSOR-REFS>
    </EOC-EXECUTABLE-ENTITY-REF-GROUP>
    <EOC-EXECUTABLE-ENTITY-REF-GROUP>
      <SHORT-NAME>eocEerg_ExecutableEntitiesCluster_02</SHORT-NAME>
      <NESTED-ELEMENT-REFS>
        <NESTED-ELEMENT-REF DEST="EOC-EVENT-REF">/MappingEecToLetInterval/sysTiming_MappingEecToLetInterval/
            eoc_DefiningAndMappingEecs/eocERef_te_re01_Swc03_1ms</NESTED-ELEMENT-REF>
```

```
            <NESTED-ELEMENT-REF DEST="EOC-EVENT-REF">/MappingEecToLetInterval/sysTiming_MappingEecToLetInterval/
              eoc_DefiningAndMappingEecs/eocERef_te_re01_Swc07_1ms</NESTED-ELEMENT-REF>
          </NESTED-ELEMENT-REFS>
          <SUCCESSOR-REFS>
            <SUCCESSOR-REF DEST="EOC-EXECUTABLE-ENTITY-REF-GROUP">/MappingEecToLetInterval/
              sysTiming_MappingEecToLetInterval/eoc_DefiningAndMappingEecs/eocEerg_ExecutableEntitiesCluster_03</
              SUCCESSOR-REF>
          </SUCCESSOR-REFS>
        </EOC-EXECUTABLE-ENTITY-REF-GROUP>
        <EOC-EXECUTABLE-ENTITY-REF-GROUP>
          <SHORT-NAME>eocEerg_ExecutableEntitiesCluster_03</SHORT-NAME>
          <NESTED-ELEMENT-REFS>
            <NESTED-ELEMENT-REF DEST="EOC-EVENT-REF">/MappingEecToLetInterval/sysTiming_MappingEecToLetInterval/
              eoc_DefiningAndMappingEecs/eocERef_te_re01_Swc05_1ms</NESTED-ELEMENT-REF>
            <NESTED-ELEMENT-REF DEST="EOC-EVENT-REF">/MappingEecToLetInterval/sysTiming_MappingEecToLetInterval/
              eoc_DefiningAndMappingEecs/eocERef_te_re01_Swc06_1ms</NESTED-ELEMENT-REF>
            <NESTED-ELEMENT-REF DEST="EOC-EVENT-REF">/MappingEecToLetInterval/sysTiming_MappingEecToLetInterval/
              eoc_DefiningAndMappingEecs/eocERef_te_re01_Swc08_1ms</NESTED-ELEMENT-REF>
          </NESTED-ELEMENT-REFS>
        </EOC-EXECUTABLE-ENTITY-REF-GROUP>
      </ORDERED-ELEMENTS>
    </EXECUTION-ORDER-CONSTRAINT>
```

Listing C.10: Mapping Executable Entities Cluster to LET Intervals

C.3 Software Cluster

C.3.1 Software Cluster - Timing descriptions

```
<?xml version="1.0" encoding="UTF-8"?>
<AUTOSAR xmlns="http://autosar.org/schema/r4.0" xmlns:xsi="http://www.w3.org/2001/XMLSchema-instance" xsi:schemaLocation="
   http://autosar.org/schema/r4.0 AUTOSAR_00055.xsd">
  <AR-PACKAGES>
    <AR-PACKAGE UUID="bdbade53-5890-4e1c-aac0-91d3e71b2e19">
      <SHORT-NAME>System</SHORT-NAME>
      <ELEMENTS>
        <SYSTEM S="">
          <SHORT-NAME>SoftwareClusterA</SHORT-NAME>
          <CATEGORY>SW_CLUSTER_SYSTEM_DESCRIPTION</CATEGORY>
          <SW-CLUSTERS>
            <CP-SOFTWARE-CLUSTER-REF-CONDITIONAL>
              <CP-SOFTWARE-CLUSTER-REF DEST="CP-SOFTWARE-CLUSTER">/SoftwareClusters/SoftwareClusterA</CP-SOFTWARE-CLUSTER-REF>
            </CP-SOFTWARE-CLUSTER-REF-CONDITIONAL>
          </SW-CLUSTERS>
        </SYSTEM>
        <SYSTEM S="">
          <SHORT-NAME>SoftwareClusterB</SHORT-NAME>
          <CATEGORY>SW_CLUSTER_SYSTEM_DESCRIPTION</CATEGORY>
          <SW-CLUSTERS>
            <CP-SOFTWARE-CLUSTER-REF-CONDITIONAL>
              <CP-SOFTWARE-CLUSTER-REF DEST="CP-SOFTWARE-CLUSTER">/SoftwareClusters/SoftwareClusterB</CP-SOFTWARE-CLUSTER-REF>
            </CP-SOFTWARE-CLUSTER-REF-CONDITIONAL>
          </SW-CLUSTERS>
        </SYSTEM>
        <SYSTEM S="">
          <SHORT-NAME>SoftwareClusterHost</SHORT-NAME>
          <CATEGORY>SW_CLUSTER_SYSTEM_DESCRIPTION</CATEGORY>
          <SW-CLUSTERS>
            <CP-SOFTWARE-CLUSTER-REF-CONDITIONAL>
              <CP-SOFTWARE-CLUSTER-REF DEST="CP-SOFTWARE-CLUSTER">/SoftwareClusters/SoftwareClusterHost</CP-SOFTWARE-CLUSTER-
                REF>
            </CP-SOFTWARE-CLUSTER-REF-CONDITIONAL>
          </SW-CLUSTERS>
        </SYSTEM>
        <SYSTEM>
          <SHORT-NAME>System</SHORT-NAME>
          <CATEGORY>SYSTEM_DESCRIPTION</CATEGORY>
          <ROOT-SOFTWARE-COMPOSITIONS>
            <ROOT-SW-COMPOSITION-PROTOTYPE>
              <SHORT-NAME>rscp_System</SHORT-NAME>
              <SOFTWARE-COMPOSITION-TREF DEST="COMPOSITION-SW-COMPONENT-TYPE">/SwComponents/CSWCT01</SOFTWARE-COMPOSITION-TREF
                >
            </ROOT-SW-COMPOSITION-PROTOTYPE>
          </ROOT-SOFTWARE-COMPOSITIONS>
        </SYSTEM>
      </ELEMENTS>
    </AR-PACKAGE>
    <AR-PACKAGE>
      <SHORT-NAME>SoftwareClusters</SHORT-NAME>
      <ELEMENTS>
        <CP-SOFTWARE-CLUSTER>
          <SHORT-NAME>SoftwareClusterA</SHORT-NAME>
          <CATEGORY>APPLICATION_SOFTWARE_CLUSTER</CATEGORY>
          <SW-COMPOSITIONS>
            <COMPOSITION-SW-COMPONENT-TYPE-REF-CONDITIONAL>
              <COMPOSITION-SW-COMPONENT-TYPE-REF DEST="COMPOSITION-SW-COMPONENT-TYPE">/SwComponents/CSWCT04</COMPOSITION-SW-
                COMPONENT-TYPE-REF>
            </COMPOSITION-SW-COMPONENT-TYPE-REF-CONDITIONAL>
            <COMPOSITION-SW-COMPONENT-TYPE-REF-CONDITIONAL>
```

```
          <COMPOSITION-SW-COMPONENT-TYPE-REF DEST="COMPOSITION-SW-COMPONENT-TYPE">/SwComponents/CSWCT05</COMPOSITION-SW-
              COMPONENT-TYPE-REF>
        </COMPOSITION-SW-COMPONENT-TYPE-REF-CONDITIONAL>
        <COMPOSITION-SW-COMPONENT-TYPE-REF-CONDITIONAL>
          <COMPOSITION-SW-COMPONENT-TYPE-REF DEST="COMPOSITION-SW-COMPONENT-TYPE">/SwComponents/CSWCT10</COMPOSITION-SW-
              COMPONENT-TYPE-REF>
        </COMPOSITION-SW-COMPONENT-TYPE-REF-CONDITIONAL>
      </SW-COMPOSITIONS>
    </CP-SOFTWARE-CLUSTER>
    <CP-SOFTWARE-CLUSTER>
      <SHORT-NAME>SoftwareClusterB</SHORT-NAME>
      <CATEGORY>APPLICATION_SOFTWARE_CLUSTER</CATEGORY>
      <SW-COMPOSITIONS>
        <COMPOSITION-SW-COMPONENT-TYPE-REF-CONDITIONAL>
          <COMPOSITION-SW-COMPONENT-TYPE-REF DEST="COMPOSITION-SW-COMPONENT-TYPE">/SwComponents/CSWCT09</COMPOSITION-SW-
              COMPONENT-TYPE-REF>
        </COMPOSITION-SW-COMPONENT-TYPE-REF-CONDITIONAL>
        <COMPOSITION-SW-COMPONENT-TYPE-REF-CONDITIONAL>
          <COMPOSITION-SW-COMPONENT-TYPE-REF DEST="COMPOSITION-SW-COMPONENT-TYPE">/SwComponents/CSWCT11</COMPOSITION-SW-
              COMPONENT-TYPE-REF>
        </COMPOSITION-SW-COMPONENT-TYPE-REF-CONDITIONAL>
      </SW-COMPOSITIONS>
    </CP-SOFTWARE-CLUSTER>
    <CP-SOFTWARE-CLUSTER>
      <SHORT-NAME>SoftwareClusterHost</SHORT-NAME>
      <CATEGORY>HOST_SOFTWARE_CLUSTER</CATEGORY>
      <SW-COMPOSITIONS/>
    </CP-SOFTWARE-CLUSTER>
  </ELEMENTS>
</AR-PACKAGE>
<AR-PACKAGE>
  <SHORT-NAME>SoftwareClusterMappings</SHORT-NAME>
  <AR-PACKAGES>
    <AR-PACKAGE>
      <SHORT-NAME>AtoHost</SHORT-NAME>
      <ELEMENTS>
        <TD-CP-SOFTWARE-CLUSTER-MAPPING-SET>
          <SHORT-NAME>AtoHostMappingSet</SHORT-NAME>
          <TD-CP-SOFTWARE-CLUSTER-TO-TD-MAPPINGS>
            <TD-CP-SOFTWARE-CLUSTER-MAPPING>
              <SHORT-NAME>AToDispatcher10msMapping</SHORT-NAME>
              <PROVIDER-REF DEST="CP-SOFTWARE-CLUSTER">/SoftwareClusters/SoftwareClusterHost</PROVIDER-REF>
              <REQUESTOR-REFS>
                <REQUESTOR-REF DEST="CP-SOFTWARE-CLUSTER">/SoftwareClusters/SoftwareClusterA</REQUESTOR-REF>
              </REQUESTOR-REFS>
              <TIMING-DESCRIPTION-REF DEST="TD-EVENT-COMPLEX">/TimingExtensions/SoftwareClusterHostTiming/
                  Dispatcher10msEntry</TIMING-DESCRIPTION-REF>
            </TD-CP-SOFTWARE-CLUSTER-MAPPING>
            <TD-CP-SOFTWARE-CLUSTER-MAPPING>
              <SHORT-NAME>AToLet5msMapping</SHORT-NAME>
              <PROVIDER-REF DEST="CP-SOFTWARE-CLUSTER">/SoftwareClusters/SoftwareClusterHost</PROVIDER-REF>
              <REQUESTOR-REFS>
                <REQUESTOR-REF DEST="CP-SOFTWARE-CLUSTER">/SoftwareClusters/SoftwareClusterA</REQUESTOR-REF>
              </REQUESTOR-REFS>
              <TIMING-DESCRIPTION-REF DEST="TIMING-DESCRIPTION-EVENT-CHAIN">/TimingExtensions/SoftwareClusterHostTiming/
                  Let5msInterval</TIMING-DESCRIPTION-REF>
            </TD-CP-SOFTWARE-CLUSTER-MAPPING>
          </TD-CP-SOFTWARE-CLUSTER-TO-TD-MAPPINGS>
        </TD-CP-SOFTWARE-CLUSTER-MAPPING-SET>
      </ELEMENTS>
    </AR-PACKAGE>
    <AR-PACKAGE>
      <SHORT-NAME>BtoHost</SHORT-NAME>
    </AR-PACKAGE>
  </AR-PACKAGES>
</AR-PACKAGE>
<AR-PACKAGE UUID="0fddb17c-de73-447d-a0a6-85b85f5d2449">
  <SHORT-NAME>TimingExtensions</SHORT-NAME>
  <ELEMENTS>
    <SYSTEM-TIMING>
      <SHORT-NAME>SoftwareClusterATiming</SHORT-NAME>
      <TIMING-REQUIREMENTS>
        <EXECUTION-ORDER-CONSTRAINT>
          <SHORT-NAME>eocDispatcher10ms</SHORT-NAME>
          <!-- <IS-EVENT>true</IS-EVENT> -->
          <ORDERED-ELEMENTS>
            <EOC-EXECUTABLE-ENTITY-REF-GROUP>
              <SHORT-NAME>eoceergDispatcher10ms</SHORT-NAME>
              <NESTED-ELEMENT-REFS>
                <NESTED-ELEMENT-REF DEST="EOC-EVENT-REF">/TimingExtensions/SoftwareClusterATiming/eocDispatcher10ms/
                    eocerRe1ASWCT05</NESTED-ELEMENT-REF>
                <NESTED-ELEMENT-REF DEST="EOC-EVENT-REF">/TimingExtensions/SoftwareClusterATiming/eocDispatcher10ms/
                    eocerRe1ASWCT02</NESTED-ELEMENT-REF>
                <NESTED-ELEMENT-REF DEST="EOC-EVENT-REF">/TimingExtensions/SoftwareClusterATiming/eocDispatcher10ms/
                    eocerRe2ASWCT15</NESTED-ELEMENT-REF>
                <NESTED-ELEMENT-REF DEST="EOC-EVENT-REF">/TimingExtensions/SoftwareClusterATiming/eocDispatcher10ms/
                    eocerRe2ASWCT08</NESTED-ELEMENT-REF>
                <NESTED-ELEMENT-REF DEST="EOC-EVENT-REF">/TimingExtensions/SoftwareClusterATiming/eocDispatcher10ms/
                    eocerRe1ASWCT13</NESTED-ELEMENT-REF>
                <NESTED-ELEMENT-REF DEST="EOC-EVENT-REF">/TimingExtensions/SoftwareClusterATiming/eocDispatcher10ms/
                    eocerRe3ASWCT09</NESTED-ELEMENT-REF>
              </NESTED-ELEMENT-REFS>
              <TRIGGERING-EVENT-REF DEST="TD-EVENT-COMPLEX">/TimingExtensions/SoftwareClusterHostTiming/
                  Dispatcher10msEntry</TRIGGERING-EVENT-REF>
            </EOC-EXECUTABLE-ENTITY-REF-GROUP>
```

```
          <EOC-EVENT-REF>
            <SHORT-NAME>eocerRe1ASWCT13</SHORT-NAME>
            <EVENT-REF DEST="TIMING-EVENT">/SwComponents/ASWCT13/ibASWCT13/teRe1ASWCT13</EVENT-REF>
          </EOC-EVENT-REF>
          <EOC-EVENT-REF>
            <SHORT-NAME>eocerRe1ASWCT02</SHORT-NAME>
            <EVENT-REF DEST="TIMING-EVENT">/SwComponents/ASWCT02/ibASWCT02/teRe1ASWCT02</EVENT-REF>
          </EOC-EVENT-REF>
          <EOC-EVENT-REF>
            <SHORT-NAME>eocerRe1ASWCT05</SHORT-NAME>
            <EVENT-REF DEST="TIMING-EVENT">/SwComponents/ASWCT05/ibASWCT05/teRe1ASWCT05</EVENT-REF>
          </EOC-EVENT-REF>
          <EOC-EVENT-REF>
            <SHORT-NAME>eocerRe2ASWCT08</SHORT-NAME>
            <EVENT-REF DEST="TIMING-EVENT">/SwComponents/ASWCT08/ibASWCT08/teRe2ASWCT08</EVENT-REF>
          </EOC-EVENT-REF>
          <EOC-EVENT-REF>
            <SHORT-NAME>eocerRe2ASWCT15</SHORT-NAME>
            <EVENT-REF DEST="TIMING-EVENT">/SwComponents/ASWCT15/ibASWCT15/teRe2ASWCT15</EVENT-REF>
          </EOC-EVENT-REF>
          <EOC-EVENT-REF>
            <SHORT-NAME>eocerRe3ASWCT09</SHORT-NAME>
            <EVENT-REF DEST="TIMING-EVENT">/SwComponents/ASWCT09/ibASWCT09/teRe3ASWCT09</EVENT-REF>
          </EOC-EVENT-REF>
        </ORDERED-ELEMENTS>
      </EXECUTION-ORDER-CONSTRAINT>
      <EXECUTION-ORDER-CONSTRAINT>
        <SHORT-NAME>eocLet5ms</SHORT-NAME>
        <!-- <IS-EVENT>true</IS-EVENT> -->
        <ORDERED-ELEMENTS>
          <EOC-EXECUTABLE-ENTITY-REF-GROUP>
            <SHORT-NAME>eoceergLet5ms</SHORT-NAME>
            <LET-INTERVAL-REFS>
              <LET-INTERVAL-REF DEST="TIMING-DESCRIPTION-EVENT-CHAIN">/TimingExtensions/SoftwareClusterHostTiming/
                  Let5msInterval</LET-INTERVAL-REF>
            </LET-INTERVAL-REFS>
            <NESTED-ELEMENT-REFS>
              <NESTED-ELEMENT-REF DEST="EOC-EVENT-REF">/TimingExtensions/SoftwareClusterATiming/eocLet5ms/
                  eocerRe1ASWCT14</NESTED-ELEMENT-REF>
              <NESTED-ELEMENT-REF DEST="EOC-EVENT-REF">/TimingExtensions/SoftwareClusterATiming/eocLet5ms/
                  eocerRe2ASWCT05</NESTED-ELEMENT-REF>
              <NESTED-ELEMENT-REF DEST="EOC-EVENT-REF">/TimingExtensions/SoftwareClusterATiming/eocLet5ms/
                  eocerRe2ASWCT03</NESTED-ELEMENT-REF>
              <NESTED-ELEMENT-REF DEST="EOC-EVENT-REF">/TimingExtensions/SoftwareClusterATiming/eocLet5ms/
                  eocerRe3ASWCT06</NESTED-ELEMENT-REF>
            </NESTED-ELEMENT-REFS>
          </EOC-EXECUTABLE-ENTITY-REF-GROUP>
          <EOC-EVENT-REF>
            <SHORT-NAME>eocerRe1ASWCT14</SHORT-NAME>
            <EVENT-REF DEST="TIMING-EVENT">/SwComponents/ASWCT14/ibASWCT14/teRe1ASWCT14</EVENT-REF>
          </EOC-EVENT-REF>
          <EOC-EVENT-REF>
            <SHORT-NAME>eocerRe2ASWCT03</SHORT-NAME>
            <EVENT-REF DEST="TIMING-EVENT">/SwComponents/ASWCT03/ibASWCT03/teRe2ASWCT03</EVENT-REF>
          </EOC-EVENT-REF>
          <EOC-EVENT-REF>
            <SHORT-NAME>eocerRe2ASWCT05</SHORT-NAME>
            <EVENT-REF DEST="TIMING-EVENT">/SwComponents/ASWCT05/ibASWCT05/teRe2ASWCT05</EVENT-REF>
          </EOC-EVENT-REF>
          <EOC-EVENT-REF>
            <SHORT-NAME>eocerRe3ASWCT06</SHORT-NAME>
            <EVENT-REF DEST="TIMING-EVENT">/SwComponents/ASWCT06/ibASWCT06/teRe3ASWCT06</EVENT-REF>
          </EOC-EVENT-REF>
        </ORDERED-ELEMENTS>
        <!-- <PERMIT-MULTIPLE-REFERENCES-TO-EE>false</PERMIT-MULTIPLE-REFERENCES-TO-EE> -->
      </EXECUTION-ORDER-CONSTRAINT>
    </TIMING-REQUIREMENTS>
    <SYSTEM-REF DEST="SYSTEM">/System/SoftwareClusterA</SYSTEM-REF>
  </SYSTEM-TIMING>
  <SYSTEM-TIMING S="">
    <SHORT-NAME>SoftwareClusterBTiming</SHORT-NAME>
    <SYSTEM-REF DEST="SYSTEM">/System/SoftwareClusterB</SYSTEM-REF>
  </SYSTEM-TIMING>
  <SYSTEM-TIMING UUID="">
    <SHORT-NAME>SoftwareClusterHostTiming</SHORT-NAME>
    <TIMING-DESCRIPTIONS>
      <TIMING-DESCRIPTION-EVENT-CHAIN>
        <SHORT-NAME>Dispatcher10ms</SHORT-NAME>
        <STIMULUS-REF DEST="TD-EVENT-COMPLEX">/TimingExtensions/SoftwareClusterHostTiming/Dispatcher10msEntry</STIMULUS-
            REF>
        <RESPONSE-REF DEST="TD-EVENT-COMPLEX">/TimingExtensions/SoftwareClusterHostTiming/Dispatcher10msExit</RESPONSE-
            REF>
      </TIMING-DESCRIPTION-EVENT-CHAIN>
      <TD-EVENT-COMPLEX>
        <SHORT-NAME>Dispatcher10msEntry</SHORT-NAME>
        <CATEGORY>DISPATCH_ENTRY_POINT</CATEGORY>
      </TD-EVENT-COMPLEX>
      <TD-EVENT-COMPLEX>
        <SHORT-NAME>Dispatcher10msExit</SHORT-NAME>
        <CATEGORY>DISPATCH_EXIT_POINT</CATEGORY>
      </TD-EVENT-COMPLEX>
      <TIMING-DESCRIPTION-EVENT-CHAIN>
        <SHORT-NAME>Let5msInterval</SHORT-NAME>
        <CATEGORY>LET_INTERVAL</CATEGORY>
        <STIMULUS-REF DEST="TD-EVENT-COMPLEX">/TimingExtensions/SoftwareClusterHostTiming/Let5msRelease</STIMULUS-REF>
```

```
            <RESPONSE-REF DEST="TD-EVENT-COMPLEX">/TimingExtensions/SoftwareClusterHostTiming/Let5msTerminate</RESPONSE-REF>
          </TIMING-DESCRIPTION-EVENT-CHAIN>
          <TD-EVENT-COMPLEX>
            <SHORT-NAME>Let5msRelease</SHORT-NAME>
            <CATEGORY>LET_RELEASE</CATEGORY>
          </TD-EVENT-COMPLEX>
          <TD-EVENT-COMPLEX>
            <SHORT-NAME>Let5msTerminate</SHORT-NAME>
            <CATEGORY>LET_TERMINATE</CATEGORY>
          </TD-EVENT-COMPLEX>
        </TIMING-DESCRIPTIONS>
        <TIMING-REQUIREMENTS>
          <LATENCY-TIMING-CONSTRAINT>
            <SHORT-NAME>Dispatcher10msMaxExecutionTime</SHORT-NAME>
            <LATENCY-CONSTRAINT-TYPE>REACTION</LATENCY-CONSTRAINT-TYPE>
            <SCOPE-REF DEST="TIMING-DESCRIPTION-EVENT-CHAIN">/TimingExtensions/SoftwareClusterHostTiming/Dispatcher10ms</
              SCOPE-REF>
            <MINIMUM>
              <CSE-CODE>2</CSE-CODE>
              <CSE-CODE-FACTOR>0</CSE-CODE-FACTOR>
            </MINIMUM>
            <MAXIMUM>
              <CSE-CODE>2</CSE-CODE>
              <CSE-CODE-FACTOR>5</CSE-CODE-FACTOR>
            </MAXIMUM>
          </LATENCY-TIMING-CONSTRAINT>
          <PERIODIC-EVENT-TRIGGERING>
            <SHORT-NAME>Dispatcher10msPetc</SHORT-NAME>
            <EVENT-REF DEST="TD-EVENT-COMPLEX">/TimingExtensions/SoftwareClusterHostTiming/Dispatcher10msEntry</EVENT-REF>
            <MINIMUM-INTER-ARRIVAL-TIME>
              <CSE-CODE>3</CSE-CODE>
              <CSE-CODE-FACTOR>10</CSE-CODE-FACTOR>
            </MINIMUM-INTER-ARRIVAL-TIME>
            <JITTER>
              <CSE-CODE>3</CSE-CODE>
              <CSE-CODE-FACTOR>1</CSE-CODE-FACTOR>
            </JITTER>
            <PERIOD>
              <CSE-CODE>3</CSE-CODE>
              <CSE-CODE-FACTOR>10</CSE-CODE-FACTOR>
            </PERIOD>
          </PERIODIC-EVENT-TRIGGERING>
          <LATENCY-TIMING-CONSTRAINT>
            <SHORT-NAME>Let5msLatency</SHORT-NAME>
            <LATENCY-CONSTRAINT-TYPE>REACTION</LATENCY-CONSTRAINT-TYPE>
            <MINIMUM>
              <CSE-CODE>3</CSE-CODE>
              <CSE-CODE-FACTOR>5</CSE-CODE-FACTOR>
            </MINIMUM>
            <MAXIMUM>
              <CSE-CODE>3</CSE-CODE>
              <CSE-CODE-FACTOR>5</CSE-CODE-FACTOR>
            </MAXIMUM>
          </LATENCY-TIMING-CONSTRAINT>
          <PERIODIC-EVENT-TRIGGERING>
            <SHORT-NAME>Let5msPetc</SHORT-NAME>
            <EVENT-REF DEST="TD-EVENT-COMPLEX">/TimingExtensions/SoftwareClusterHostTiming/Let5msRelease</EVENT-REF>
            <MINIMUM-INTER-ARRIVAL-TIME>
              <CSE-CODE>3</CSE-CODE>
              <CSE-CODE-FACTOR>5</CSE-CODE-FACTOR>
            </MINIMUM-INTER-ARRIVAL-TIME>
            <JITTER>
              <CSE-CODE>3</CSE-CODE>
              <CSE-CODE-FACTOR>0</CSE-CODE-FACTOR>
            </JITTER>
            <PERIOD>
              <CSE-CODE>3</CSE-CODE>
              <CSE-CODE-FACTOR>5</CSE-CODE-FACTOR>
            </PERIOD>
          </PERIODIC-EVENT-TRIGGERING>
        </TIMING-REQUIREMENTS>
        <SYSTEM-REF DEST="SYSTEM">/System/SoftwareClusterHost</SYSTEM-REF>
      </SYSTEM-TIMING>
    </ELEMENTS>
  </AR-PACKAGE>
 </AR-PACKAGES>
</AUTOSAR>
```

Listing C.11: Timing Extensions - Software Cluster Dispatcher Logical Execution Time

C.4 System Level Logical Execution Time

C.4.1 System Level Logical Execution Time

```
<?xml version="1.0" encoding="utf-8"?>
<!--
    Purpose:    Example ARXML listings for use in TPS_AbstractPlatformDescription
    Date:       First version 2020-August
    Author:     B.R.
```

```
-->
<AUTOSAR xmlns="http://autosar.org/schema/r4.0" xmlns:xsi="http://www.w3.org/2001/XMLSchema-instance" xsi:schemaLocation="
   http://autosar.org/schema/r4.0 AUTOSAR_00055.xsd">
  <AR-PACKAGES>
    <AR-PACKAGE>
      <SHORT-NAME>SystemLevelLogicalExecutionTime</SHORT-NAME>
      <AR-PACKAGES>
        <AR-PACKAGE>
          <SHORT-NAME>Types</SHORT-NAME>
          <ELEMENTS>
            <APPLICATION-PRIMITIVE-DATA-TYPE>
              <SHORT-NAME>AppDataType1</SHORT-NAME>
              <CATEGORY>VALUE</CATEGORY>
            </APPLICATION-PRIMITIVE-DATA-TYPE>
          </ELEMENTS>
        </AR-PACKAGE>
        <AR-PACKAGE>
          <SHORT-NAME>Interfaces</SHORT-NAME>
          <ELEMENTS>
            <SENDER-RECEIVER-INTERFACE>
              <SHORT-NAME>SRInterface1</SHORT-NAME>
              <DATA-ELEMENTS>
                <VARIABLE-DATA-PROTOTYPE>
                  <SHORT-NAME>vdp_X</SHORT-NAME>
                  <TYPE-TREF DEST="APPLICATION-PRIMITIVE-DATA-TYPE">/SystemLevelLogicalExecutionTime/Types/AppDataType1</TYPE-
                      TREF>
                </VARIABLE-DATA-PROTOTYPE>
                <VARIABLE-DATA-PROTOTYPE>
                  <SHORT-NAME>vdp_Y</SHORT-NAME>
                  <TYPE-TREF DEST="APPLICATION-DATA-TYPE">/SystemLevelLogicalExecutionTime/Types/AppDataType1</TYPE-TREF>
                </VARIABLE-DATA-PROTOTYPE>
              </DATA-ELEMENTS>
            </SENDER-RECEIVER-INTERFACE>
          </ELEMENTS>
        </AR-PACKAGE>
        <AR-PACKAGE>
          <SHORT-NAME>Components</SHORT-NAME>
          <ELEMENTS>
            <ADAPTIVE-APPLICATION-SW-COMPONENT-TYPE>
              <SHORT-NAME>ApAppSwc1</SHORT-NAME>
              <PORTS>
                <P-PORT-PROTOTYPE>
                  <SHORT-NAME>PPort1</SHORT-NAME>
                  <PROVIDED-INTERFACE-TREF DEST="SENDER-RECEIVER-INTERFACE">/SystemLevelLogicalExecutionTime/Interfaces/
                      SRInterface1</PROVIDED-INTERFACE-TREF>
                </P-PORT-PROTOTYPE>
                <P-PORT-PROTOTYPE>
                  <SHORT-NAME>PPort2</SHORT-NAME>
                  <PROVIDED-INTERFACE-TREF DEST="SENDER-RECEIVER-INTERFACE">/SystemLevelLogicalExecutionTime/Interfaces/
                      SRInterface1</PROVIDED-INTERFACE-TREF>
                </P-PORT-PROTOTYPE>
              </PORTS>
            </ADAPTIVE-APPLICATION-SW-COMPONENT-TYPE>
            <APPLICATION-SW-COMPONENT-TYPE>
              <SHORT-NAME>CpAppSwc1</SHORT-NAME>
              <PORTS>
                <R-PORT-PROTOTYPE>
                  <SHORT-NAME>RPort2</SHORT-NAME>
                  <REQUIRED-INTERFACE-TREF DEST="SENDER-RECEIVER-INTERFACE">/SystemLevelLogicalExecutionTime/Interfaces/
                      SRInterface1</REQUIRED-INTERFACE-TREF>
                </R-PORT-PROTOTYPE>
                <R-PORT-PROTOTYPE>
                  <SHORT-NAME>RPort1</SHORT-NAME>
                  <REQUIRED-INTERFACE-TREF DEST="SENDER-RECEIVER-INTERFACE">/SystemLevelLogicalExecutionTime/Interfaces/
                      SRInterface1</REQUIRED-INTERFACE-TREF>
                </R-PORT-PROTOTYPE>
              </PORTS>
            </APPLICATION-SW-COMPONENT-TYPE>
            <COMPOSITION-SW-COMPONENT-TYPE>
              <SHORT-NAME>CpCompSwc1</SHORT-NAME>
              <COMPONENTS>
                <SW-COMPONENT-PROTOTYPE>
                  <SHORT-NAME>CpAppSwcp1</SHORT-NAME>
                  <TYPE-TREF DEST="APPLICATION-SW-COMPONENT-TYPE">/SystemLevelLogicalExecutionTime/Components/CpAppSwc1</TYPE-
                      TREF>
                </SW-COMPONENT-PROTOTYPE>
              </COMPONENTS>
            </COMPOSITION-SW-COMPONENT-TYPE>
            <COMPOSITION-SW-COMPONENT-TYPE>
              <SHORT-NAME>ApCompSwc1</SHORT-NAME>
              <COMPONENTS>
                <SW-COMPONENT-PROTOTYPE>
                  <SHORT-NAME>ApAppSwcp1</SHORT-NAME>
                </SW-COMPONENT-PROTOTYPE>
              </COMPONENTS>
            </COMPOSITION-SW-COMPONENT-TYPE>
          </ELEMENTS>
        </AR-PACKAGE>
        <AR-PACKAGE>
          <SHORT-NAME>TimingExtensions</SHORT-NAME>
          <ELEMENTS>
            <SYSTEM-TIMING>
              <SHORT-NAME>SystemTiming</SHORT-NAME>
              <TIMING-CLOCKS>
                <TDLET-ZONE-CLOCK>
```

```
      <SHORT-NAME>ZoneClock0</SHORT-NAME>
      <ACCURACY-INT>
        <CSE-CODE>0</CSE-CODE>
        <CSE-CODE-FACTOR>30</CSE-CODE-FACTOR>
      </ACCURACY-INT>
    </TDLET-ZONE-CLOCK>
    <TDLET-ZONE-CLOCK>
      <SHORT-NAME>ZoneClock1</SHORT-NAME>
    </TDLET-ZONE-CLOCK>
    <TDLET-ZONE-CLOCK>
      <SHORT-NAME>ZoneClock2</SHORT-NAME>
    </TDLET-ZONE-CLOCK>
  </TIMING-CLOCKS>
  <TIMING-CLOCK-SYNC-ACCURACYS>
    <TIMING-CLOCK-SYNC-ACCURACY>
      <SHORT-NAME>SyncAccuracy1</SHORT-NAME>
      <ACCURACY>
        <CSE-CODE>0</CSE-CODE>
        <CSE-CODE-FACTOR>10</CSE-CODE-FACTOR>
      </ACCURACY>
      <LOWER-REF DEST="TDLET-ZONE-CLOCK">/SystemLevelLogicalExecutionTime/TimingExtensions/SystemTiming/ZoneClock1
        </LOWER-REF>
      <UPPER-REF DEST="TDLET-ZONE-CLOCK">/SystemLevelLogicalExecutionTime/TimingExtensions/SystemTiming/ZoneClock0
        </UPPER-REF>
    </TIMING-CLOCK-SYNC-ACCURACY>
    <TIMING-CLOCK-SYNC-ACCURACY>
      <SHORT-NAME>SyncAccuracy2</SHORT-NAME>
      <ACCURACY>
        <CSE-CODE>0</CSE-CODE>
        <CSE-CODE-FACTOR>5</CSE-CODE-FACTOR>
      </ACCURACY>
      <LOWER-REF DEST="TDLET-ZONE-CLOCK">/SystemLevelLogicalExecutionTime/TimingExtensions/SystemTiming/ZoneClock2
        </LOWER-REF>
      <UPPER-REF DEST="TDLET-ZONE-CLOCK">/SystemLevelLogicalExecutionTime/TimingExtensions/SystemTiming/ZoneClock0
        </UPPER-REF>
    </TIMING-CLOCK-SYNC-ACCURACY>
  </TIMING-CLOCK-SYNC-ACCURACYS>
  <!-- start example sllet tds - line 48 -->
  <TIMING-DESCRIPTIONS>
    <TD-EVENT-VARIABLE-DATA-PROTOTYPE>
      <SHORT-NAME>tdevdp_XinRPort1</SHORT-NAME>
      <CLOCK-REFERENCE-REF DEST="TDLET-ZONE-CLOCK">/SystemLevelLogicalExecutionTime/TimingExtensions/SystemTiming/
        ZoneClock0</CLOCK-REFERENCE-REF>
      <PORT-PROTOTYPE-IREF>
        <R-PORT-IN-COMPOSITION-INSTANCE-REF>
          <CONTEXT-COMPONENT-REF DEST="SW-COMPONENT-PROTOTYPE">/SystemLevelLogicalExecutionTime/Components/
            CpCompSwc1/CpAppSwcp1</CONTEXT-COMPONENT-REF>
          <TARGET-R-PORT-REF DEST="R-PORT-PROTOTYPE">/SystemLevelLogicalExecutionTime/Components/CpAppSwc1/RPort1<
            /TARGET-R-PORT-REF>
        </R-PORT-IN-COMPOSITION-INSTANCE-REF>
      </PORT-PROTOTYPE-IREF>
      <DATA-ELEMENT-REF DEST="VARIABLE-DATA-PROTOTYPE">/SystemLevelLogicalExecutionTime/Interfaces/SRInterface1/
        vdp_X</DATA-ELEMENT-REF>
    </TD-EVENT-VARIABLE-DATA-PROTOTYPE>
    <TD-EVENT-VARIABLE-DATA-PROTOTYPE>
      <SHORT-NAME>tdevdp_XinRPort2</SHORT-NAME>
      <CLOCK-REFERENCE-REF DEST="TDLET-ZONE-CLOCK">/SystemLevelLogicalExecutionTime/TimingExtensions/SystemTiming/
        ZoneClock0</CLOCK-REFERENCE-REF>
      <PORT-PROTOTYPE-IREF>
        <R-PORT-IN-COMPOSITION-INSTANCE-REF>
          <CONTEXT-COMPONENT-REF DEST="SW-COMPONENT-PROTOTYPE">/SystemLevelLogicalExecutionTime/Components/
            CpCompSwc1/CpAppSwcp1</CONTEXT-COMPONENT-REF>
          <TARGET-R-PORT-REF DEST="R-PORT-PROTOTYPE">/SystemLevelLogicalExecutionTime/Components/CpAppSwc1/RPort2<
            /TARGET-R-PORT-REF>
        </R-PORT-IN-COMPOSITION-INSTANCE-REF>
      </PORT-PROTOTYPE-IREF>
      <DATA-ELEMENT-REF DEST="VARIABLE-DATA-PROTOTYPE">/SystemLevelLogicalExecutionTime/Interfaces/SRInterface1/
        vdp_X</DATA-ELEMENT-REF>
    </TD-EVENT-VARIABLE-DATA-PROTOTYPE>
    <TD-EVENT-VARIABLE-DATA-PROTOTYPE>
      <SHORT-NAME>tdevdp_XinPPort1</SHORT-NAME>
      <CLOCK-REFERENCE-REF DEST="TDLET-ZONE-CLOCK">/SystemLevelLogicalExecutionTime/TimingExtensions/SystemTiming/
        ZoneClock2</CLOCK-REFERENCE-REF>
      <PORT-PROTOTYPE-IREF>
        <P-PORT-IN-COMPOSITION-INSTANCE-REF>
          <CONTEXT-COMPONENT-REF DEST="SW-COMPONENT-PROTOTYPE">/SystemLevelLogicalExecutionTime/Components/
            ApCompSwc1/ApAppSwcp1</CONTEXT-COMPONENT-REF>
          <TARGET-P-PORT-REF DEST="P-PORT-PROTOTYPE">/SystemLevelLogicalExecutionTime/Components/ApAppSwc1/PPort1<
            /TARGET-P-PORT-REF>
        </P-PORT-IN-COMPOSITION-INSTANCE-REF>
      </PORT-PROTOTYPE-IREF>
      <DATA-ELEMENT-REF DEST="VARIABLE-DATA-PROTOTYPE">/SystemLevelLogicalExecutionTime/Interfaces/SRInterface1/
        vdp_X</DATA-ELEMENT-REF>
    </TD-EVENT-VARIABLE-DATA-PROTOTYPE>
    <TD-EVENT-VARIABLE-DATA-PROTOTYPE>
      <SHORT-NAME>tdevdp_YinPPort2</SHORT-NAME>
      <CLOCK-REFERENCE-REF DEST="TDLET-ZONE-CLOCK">/SystemLevelLogicalExecutionTime/TimingExtensions/SystemTiming/
        ZoneClock2</CLOCK-REFERENCE-REF>
      <PORT-PROTOTYPE-IREF>
        <P-PORT-IN-COMPOSITION-INSTANCE-REF>
          <CONTEXT-COMPONENT-REF DEST="SW-COMPONENT-PROTOTYPE">/SystemLevelLogicalExecutionTime/Components/
            ApCompSwc1/ApAppSwcp1</CONTEXT-COMPONENT-REF>
          <TARGET-P-PORT-REF DEST="P-PORT-PROTOTYPE">/SystemLevelLogicalExecutionTime/Components/ApAppSwc1/PPort2<
            /TARGET-P-PORT-REF>
        </P-PORT-IN-COMPOSITION-INSTANCE-REF>
```

```
          </PORT-PROTOTYPE-IREF>
          <DATA-ELEMENT-REF DEST="VARIABLE-DATA-PROTOTYPE">/SystemLevelLogicalExecutionTime/Interfaces/SRInterface1/
            vdp_Y</DATA-ELEMENT-REF>
        </TD-EVENT-VARIABLE-DATA-PROTOTYPE>
        <TD-EVENT-VFB-PORT-GROUP>
          <SHORT-NAME>tdevfbpg_RPortGroup1</SHORT-NAME>
          <TD-EVENT-VFB-PORT-REFS>
            <TD-EVENT-VFB-PORT-REF DEST="TD-EVENT-VARIABLE-DATA-PROTOTYPE">/SystemLevelLogicalExecutionTime/
              TimingExtensions/SystemTiming/tdevdp_XinRPort1</TD-EVENT-VFB-PORT-REF>
            <TD-EVENT-VFB-PORT-REF DEST="TD-EVENT-VARIABLE-DATA-PROTOTYPE">/SystemLevelLogicalExecutionTime/
              TimingExtensions/SystemTiming/tdevdp_XinRPort2</TD-EVENT-VFB-PORT-REF>
          </TD-EVENT-VFB-PORT-REFS>
        </TD-EVENT-VFB-PORT-GROUP>
        <TD-EVENT-VFB-PORT-GROUP>
          <SHORT-NAME>tdevfbpg_PPortGroup1</SHORT-NAME>
          <TD-EVENT-VFB-PORT-REFS>
            <TD-EVENT-VFB-PORT-REF DEST="TD-EVENT-VARIABLE-DATA-PROTOTYPE">/SystemLevelLogicalExecutionTime/
              TimingExtensions/SystemTiming/tdevdp_XinPPort1</TD-EVENT-VFB-PORT-REF>
            <TD-EVENT-VFB-PORT-REF DEST="TD-EVENT-VARIABLE-DATA-PROTOTYPE">/SystemLevelLogicalExecutionTime/
              TimingExtensions/SystemTiming/tdevdp_YinPPort2</TD-EVENT-VFB-PORT-REF>
          </TD-EVENT-VFB-PORT-REFS>
        </TD-EVENT-VFB-PORT-GROUP>
        <TIMING-DESCRIPTION-EVENT-CHAIN>
          <SHORT-NAME>TimingDescriptionChain1</SHORT-NAME>
          <CATEGORY>SL_LET_INTERVAL</CATEGORY>
          <STIMULUS-REF DEST="TD-EVENT-VARIABLE-DATA-PROTOTYPE">/SystemLevelLogicalExecutionTime/TimingExtensions/
            SystemTiming/tdevdp_XinPPort1</STIMULUS-REF>
          <RESPONSE-REF DEST="TD-EVENT-VFB-PORT-GROUP">/SystemLevelLogicalExecutionTime/TimingExtensions/SystemTiming/
            tdevfbpg_RPortGroup1</RESPONSE-REF>
        </TIMING-DESCRIPTION-EVENT-CHAIN>
        <TIMING-DESCRIPTION-EVENT-CHAIN>
          <SHORT-NAME>TimingDescriptionChain3</SHORT-NAME>
          <CATEGORY>SL_LET_INTERVAL</CATEGORY>
          <STIMULUS-REF DEST="TD-EVENT-VFB-PORT-GROUP">/SystemLevelLogicalExecutionTime/TimingExtensions/SystemTiming/
            tdevfbpg_PPortGroup1</STIMULUS-REF>
          <RESPONSE-REF DEST="TD-EVENT-VARIABLE-DATA-PROTOTYPE">/SystemLevelLogicalExecutionTime/TimingExtensions/
            SystemTiming/tdevdp_XinRPort1</RESPONSE-REF>
        </TIMING-DESCRIPTION-EVENT-CHAIN>
      </TIMING-DESCRIPTIONS>
      <!-- end example sllet tds - line 72 -->
      <!-- start example sllet duration/recurrence - line 73 -->
      <TIMING-REQUIREMENTS>
        <PERIODIC-EVENT-TRIGGERING>
          <SHORT-NAME>PeriodicEventTriggeringConstraintSlLetRecurrence1</SHORT-NAME>
          <MINIMUM-INTER-ARRIVAL-TIME>
            <CSE-CODE>3</CSE-CODE>
            <CSE-CODE-FACTOR>20</CSE-CODE-FACTOR>
          </MINIMUM-INTER-ARRIVAL-TIME>
          <JITTER>
            <CSE-CODE>3</CSE-CODE>
            <CSE-CODE-FACTOR>0</CSE-CODE-FACTOR>
          </JITTER>
          <PERIOD>
            <CSE-CODE>3</CSE-CODE>
            <CSE-CODE-FACTOR>20</CSE-CODE-FACTOR>
          </PERIOD>
        </PERIODIC-EVENT-TRIGGERING>
        <LATENCY-TIMING-CONSTRAINT>
          <SHORT-NAME>LatencyTimingConstraintSlLetDuration1</SHORT-NAME>
          <LATENCY-CONSTRAINT-TYPE>REACTION</LATENCY-CONSTRAINT-TYPE>
          <SCOPE-REF DEST="TIMING-DESCRIPTION-EVENT-CHAIN">/SystemLevelLogicalExecutionTime/TimingExtensions/
            SystemTiming/TimingDescriptionChain1</SCOPE-REF>
          <MAXIMUM>
            <CSE-CODE>3</CSE-CODE>
            <CSE-CODE-FACTOR>400</CSE-CODE-FACTOR>
          </MAXIMUM>
        </LATENCY-TIMING-CONSTRAINT>
      </TIMING-REQUIREMENTS>
      <!-- end example sllet duration/recurrence - line 101 -->
    </SYSTEM-TIMING>
  </ELEMENTS>
 </AR-PACKAGE>
</AR-PACKAGES>
</AR-PACKAGE>
</AR-PACKAGES>
</AUTOSAR>
```

Listing C.12: Timing Extensions - System Level Logical Execution Time

C.5 TDEventOccurrenceExpression

C.5.1 TDEventOccurrenceExpression - Filter Expression

```
1  // Condition 1
2  TIMEX_occurs( reference( "TD-EVENT-VARIABLE-DATA-PROTOTYPE:/Example/Expression/E1" ) )
3    || TIMEX_occurs( reference( "TD-EVENT-VARIABLE-DATA-PROTOTYPE:/Example/Expression/E2" ) )
4  // Condition 2
5  && TIMEX_value( reference( "AUTOSAR-VARIABLE-INSTANCE:/Example/Expression/ECX/avi_DE3" ) ) > 3
6  // Condition 3
```

```
7   && abs( TIMEX_timeSinceLastOccurrence( reference( "TD-EVENT-VARIABLE-DATA-PROTOTYPE:/Example/Expression/E1" ) ) -
8      TIMEX_timeSinceLastOccurrence( reference( "TD-EVENT-VARIABLE-DATA-PROTOTYPE:/Example/Expression/E2" ) ) ) <= 0.0005
```

Listing C.13: Event Occurrence Filter

```
<?xml version="1.0" encoding="utf-8"?>
<AUTOSAR xmlns="http://autosar.org/schema/r4.0" xmlns:xsi="http://www.w3.org/2001/XMLSchema-instance" xsi:schemaLocation="
   http://autosar.org/schema/r4.0 AUTOSAR_00055.xsd">
  <AR-PACKAGES>
    <AR-PACKAGE>
      <SHORT-NAME>Example</SHORT-NAME>
      <ELEMENTS>
        <VFB-TIMING>
          <SHORT-NAME>Expression</SHORT-NAME>
          <TIMING-DESCRIPTIONS>
            <TD-EVENT-VARIABLE-DATA-PROTOTYPE>
              <SHORT-NAME>E1</SHORT-NAME>
              <PORT-PROTOTYPE-IREF>
                <R-PORT-IN-COMPOSITION-INSTANCE-REF>
                  <TARGET-R-PORT-REF DEST="R-PORT-PROTOTYPE">/Example/Swc1/RequiredPort</TARGET-R-PORT-REF>
                </R-PORT-IN-COMPOSITION-INSTANCE-REF>
              </PORT-PROTOTYPE-IREF>
              <!-- <PORT-REF DEST="R-PORT-PROTOTYPE">/Example/Swc1/RequiredPort</PORT-REF> -->
              <DATA-ELEMENT-REF DEST="VARIABLE-DATA-PROTOTYPE">/Example/SenderReceiverInterface1/DE1</DATA-ELEMENT-REF>
              <TD-EVENT-VARIABLE-DATA-PROTOTYPE-TYPE>VARIABLE-DATA-PROTOTYPE-RECEIVED</TD-EVENT-VARIABLE-DATA-PROTOTYPE-TYPE>
            </TD-EVENT-VARIABLE-DATA-PROTOTYPE>
            <TD-EVENT-VARIABLE-DATA-PROTOTYPE>
              <SHORT-NAME>E2</SHORT-NAME>
              <PORT-PROTOTYPE-IREF>
                <R-PORT-IN-COMPOSITION-INSTANCE-REF>
                  <TARGET-R-PORT-REF DEST="R-PORT-PROTOTYPE">/Example/Swc1/RequiredPort</TARGET-R-PORT-REF>
                </R-PORT-IN-COMPOSITION-INSTANCE-REF>
              </PORT-PROTOTYPE-IREF>
              <!-- <PORT-REF DEST="R-PORT-PROTOTYPE">/Example/Swc1/RequiredPort</PORT-REF> -->
              <DATA-ELEMENT-REF DEST="VARIABLE-DATA-PROTOTYPE">/Example/SenderReceiverInterface1/DE2</DATA-ELEMENT-REF>
              <TD-EVENT-VARIABLE-DATA-PROTOTYPE-TYPE>VARIABLE-DATA-PROTOTYPE-RECEIVED</TD-EVENT-VARIABLE-DATA-PROTOTYPE-TYPE>
            </TD-EVENT-VARIABLE-DATA-PROTOTYPE>
            <TD-EVENT-VARIABLE-DATA-PROTOTYPE>
              <SHORT-NAME>E3</SHORT-NAME>
              <PORT-PROTOTYPE-IREF>
                <R-PORT-IN-COMPOSITION-INSTANCE-REF>
                  <TARGET-R-PORT-REF DEST="R-PORT-PROTOTYPE">/Example/Swc1/RequiredPort</TARGET-R-PORT-REF>
                </R-PORT-IN-COMPOSITION-INSTANCE-REF>
              </PORT-PROTOTYPE-IREF>
              <!-- <PORT-REF DEST="R-PORT-PROTOTYPE">/Example/Swc1/RequiredPort</PORT-REF> -->
              <DATA-ELEMENT-REF DEST="VARIABLE-DATA-PROTOTYPE">/Example/SenderReceiverInterface1/DE3</DATA-ELEMENT-REF>
              <TD-EVENT-VARIABLE-DATA-PROTOTYPE-TYPE>VARIABLE-DATA-PROTOTYPE-RECEIVED</TD-EVENT-VARIABLE-DATA-PROTOTYPE-TYPE>
            </TD-EVENT-VARIABLE-DATA-PROTOTYPE>
            <TD-EVENT-COMPLEX>
              <SHORT-NAME>ECX</SHORT-NAME>
              <OCCURRENCE-EXPRESSION>
                <FORMULA>
          ((TIMEX_occurs(&lt;EVENT-REF DEST="TD-EVENT-VARIABLE-DATA-PROTOTYPE"&gt;/Example/Expression/E1&lt;/EVENT-REF&gt;)
          || TIMEX_occurs(&lt;EVENT-REF DEST="TD-EVENT-VARIABLE-DATA-PROTOTYPE"&gt;/Example/Expression/E2&lt;/EVENT-REF&gt;))
          &amp;&amp;
          TIMEX_value(&lt;VARIABLE-REF DEST="AUTOSAR-VARIABLE-INSTANCE"&gt;/Example/Expression/ECX/avi_DE3 &lt;/VARIABLE-REF&
              gt;) &gt; 3
          &amp;&amp;
          abs(TIMEX_timeSinceLastOccurrence(&lt;EVENT-REF DEST="TD-EVENT-VARIABLE-DATA-PROTOTYPE"&gt;
            /Example/Expression/E1&lt;/EVENT-REF&gt;)
          - TIMEX_timeSinceLastOccurrence(&lt;EVENT-REF DEST="TD-EVENT-VARIABLE-DATA-PROTOTYPE"&gt;
              /Example/Expression/E2&lt;EVENT-REF&gt;))
          &lt;= 0.0005)
                </FORMULA>
                <VARIABLES>
                  <AUTOSAR-VARIABLE-INSTANCE>
                    <SHORT-NAME>avi_DE3</SHORT-NAME>
                    <VARIABLE-INSTANCE-IREF>
                      <CONTEXT-PORT-PROTOTYPE-REF DEST="P-PORT-PROTOTYPE">/Example/Swc1/ProvidedPort</CONTEXT-PORT-PROTOTYPE-
                          REF>
                      <TARGET-DATA-PROTOYPE-REF DEST="VARIABLE-DATA-PROTOTYPE">/Example/SenderReceiverInterface1/DE3</TARGET-
                          DATA-PROTOYPE-REF>
                    </VARIABLE-INSTANCE-IREF>
                  </AUTOSAR-VARIABLE-INSTANCE>
                </VARIABLES>
              </OCCURRENCE-EXPRESSION>
            </TD-EVENT-COMPLEX>
          </TIMING-DESCRIPTIONS>
          <COMPONENT-REF DEST="APPLICATION-SW-COMPONENT-TYPE">/Example/Swc1</COMPONENT-REF>
        </VFB-TIMING>
        <SENDER-RECEIVER-INTERFACE>
          <SHORT-NAME>SenderReceiverInterface1</SHORT-NAME>
          <DATA-ELEMENTS>
            <VARIABLE-DATA-PROTOTYPE>
              <SHORT-NAME>DE1</SHORT-NAME>
            </VARIABLE-DATA-PROTOTYPE>
            <VARIABLE-DATA-PROTOTYPE>
              <SHORT-NAME>DE2</SHORT-NAME>
            </VARIABLE-DATA-PROTOTYPE>
            <VARIABLE-DATA-PROTOTYPE>
              <SHORT-NAME>DE3</SHORT-NAME>
            </VARIABLE-DATA-PROTOTYPE>
          </DATA-ELEMENTS>
        </SENDER-RECEIVER-INTERFACE>
```

```
      <APPLICATION-SW-COMPONENT-TYPE>
        <SHORT-NAME>Swc1</SHORT-NAME>
        <PORTS>
          <P-PORT-PROTOTYPE>
            <SHORT-NAME>ProvidedPort</SHORT-NAME>
          </P-PORT-PROTOTYPE>
          <R-PORT-PROTOTYPE>
            <SHORT-NAME>RequiredPort</SHORT-NAME>
            <REQUIRED-INTERFACE-TREF DEST="SENDER-RECEIVER-INTERFACE">/Example/SenderReceiverInterface1</REQUIRED-INTERFACE-
                TREF>
          </R-PORT-PROTOTYPE>
        </PORTS>
      </APPLICATION-SW-COMPONENT-TYPE>
    </ELEMENTS>
  </AR-PACKAGE>
 </AR-PACKAGES>
</AUTOSAR>
```

Listing C.14: AUTOSAR ARXML representation of the occurrence expression for the complex event ”ECX”

C.5.2 TDEventOccurrenceExpression - Grammar

```
ExtUnaryFuncName  :  'TIMEX_value' |
                     'TIMEX_occurs' |
                     'TIMEX_hasOccurred' |
                     'TIMEX_timeSinceLastOccurrence' |
                     'TIMEX_angleSinceLastOccurrence' |
                     'TIMEX_modeActive'
                     ;
```

Listing C.15: AUTOSAR Timing Extensions Occurrence Expression Language

C.6 Test Cases

C.6.1 Test Cases - VFB Elements

```
  <AR-PACKAGE>
    <SHORT-NAME>Interfaces</SHORT-NAME>
    <ELEMENTS>
      <SENDER-RECEIVER-INTERFACE>
        <SHORT-NAME>InternalSensorData</SHORT-NAME>
        <DATA-ELEMENTS>
          <VARIABLE-DATA-PROTOTYPE>
            <SHORT-NAME>internValueX</SHORT-NAME>
            <TYPE-TREF DEST="APPLICATION-PRIMITIVE-DATA-TYPE">/Datatypes/Float</TYPE-TREF>
          </VARIABLE-DATA-PROTOTYPE>
          <VARIABLE-DATA-PROTOTYPE>
            <SHORT-NAME>internValueY</SHORT-NAME>
            <TYPE-TREF DEST="APPLICATION-PRIMITIVE-DATA-TYPE">/Datatypes/Float</TYPE-TREF>
          </VARIABLE-DATA-PROTOTYPE>
          <VARIABLE-DATA-PROTOTYPE>
            <SHORT-NAME>internValueZ</SHORT-NAME>
            <TYPE-TREF DEST="APPLICATION-PRIMITIVE-DATA-TYPE">/Datatypes/Float</TYPE-TREF>
          </VARIABLE-DATA-PROTOTYPE>
        </DATA-ELEMENTS>
      </SENDER-RECEIVER-INTERFACE>
      <SENDER-RECEIVER-INTERFACE>
        <SHORT-NAME>OutputSensorData</SHORT-NAME>
        <DATA-ELEMENTS>
          <VARIABLE-DATA-PROTOTYPE>
            <SHORT-NAME>outValueX</SHORT-NAME>
            <TYPE-TREF DEST="APPLICATION-PRIMITIVE-DATA-TYPE">/Datatypes/UInt16</TYPE-TREF>
          </VARIABLE-DATA-PROTOTYPE>
          <VARIABLE-DATA-PROTOTYPE>
            <SHORT-NAME>outValueY</SHORT-NAME>
            <TYPE-TREF DEST="APPLICATION-PRIMITIVE-DATA-TYPE">/Datatypes/UInt16</TYPE-TREF>
          </VARIABLE-DATA-PROTOTYPE>
          <VARIABLE-DATA-PROTOTYPE>
            <SHORT-NAME>outValueZ</SHORT-NAME>
            <TYPE-TREF DEST="APPLICATION-PRIMITIVE-DATA-TYPE">/Datatypes/UInt16</TYPE-TREF>
          </VARIABLE-DATA-PROTOTYPE>
        </DATA-ELEMENTS>
      </SENDER-RECEIVER-INTERFACE>
    </ELEMENTS>
  </AR-PACKAGE>
  <AR-PACKAGE>
    <SHORT-NAME>SensorPackage</SHORT-NAME>
    <ELEMENTS>
      <SENSOR-ACTUATOR-SW-COMPONENT-TYPE>
        <SHORT-NAME>SensorComponent</SHORT-NAME>
        <PORTS>
          <P-PORT-PROTOTYPE>
            <SHORT-NAME>InternalSensorData</SHORT-NAME>
            <PROVIDED-INTERFACE-TREF DEST="SENDER-RECEIVER-INTERFACE">/Interfaces/InternalSensorData</PROVIDED-INTERFACE-
                TREF>
```

```
        </P-PORT-PROTOTYPE>
      </PORTS>
      <INTERNAL-BEHAVIORS>
        <SWC-INTERNAL-BEHAVIOR>
          <SHORT-NAME>SensorBehavior</SHORT-NAME>
          <RUNNABLES>
            <RUNNABLE-ENTITY>
              <SHORT-NAME>SensorRunnable</SHORT-NAME>
            </RUNNABLE-ENTITY>
          </RUNNABLES>
        </SWC-INTERNAL-BEHAVIOR>
      </INTERNAL-BEHAVIORS>
    </SENSOR-ACTUATOR-SW-COMPONENT-TYPE>
    <APPLICATION-SW-COMPONENT-TYPE>
      <SHORT-NAME>ConditioningComponent</SHORT-NAME>
      <PORTS>
        <R-PORT-PROTOTYPE>
          <SHORT-NAME>UnprocessedSensorData</SHORT-NAME>
          <REQUIRED-INTERFACE-TREF DEST="SENDER-RECEIVER-INTERFACE">/Interfaces/InternalSensorData</REQUIRED-INTERFACE-
              TREF>
        </R-PORT-PROTOTYPE>
        <P-PORT-PROTOTYPE>
          <SHORT-NAME>ProcessedSensorData</SHORT-NAME>
          <PROVIDED-INTERFACE-TREF DEST="SENDER-RECEIVER-INTERFACE">/Interfaces/InternalSensorData</PROVIDED-INTERFACE-
              TREF>
        </P-PORT-PROTOTYPE>
      </PORTS>
      <INTERNAL-BEHAVIORS>
        <SWC-INTERNAL-BEHAVIOR>
          <SHORT-NAME>ConditioningBehavior</SHORT-NAME>
          <RUNNABLES>
            <RUNNABLE-ENTITY>
              <SHORT-NAME>ConditioningRunnable</SHORT-NAME>
            </RUNNABLE-ENTITY>
          </RUNNABLES>
        </SWC-INTERNAL-BEHAVIOR>
      </INTERNAL-BEHAVIORS>
    </APPLICATION-SW-COMPONENT-TYPE>
    <APPLICATION-SW-COMPONENT-TYPE>
      <SHORT-NAME>OutputComponent</SHORT-NAME>
      <PORTS>
        <R-PORT-PROTOTYPE>
          <SHORT-NAME>UnprocessedSensorData</SHORT-NAME>
          <REQUIRED-INTERFACE-TREF DEST="SENDER-RECEIVER-INTERFACE">/Interfaces/InternalSensorData</REQUIRED-INTERFACE-
              TREF>
        </R-PORT-PROTOTYPE>
        <P-PORT-PROTOTYPE>
          <SHORT-NAME>ProcessedSensorData</SHORT-NAME>
          <PROVIDED-INTERFACE-TREF DEST="SENDER-RECEIVER-INTERFACE">/Interfaces/OutputSensorData</PROVIDED-INTERFACE-TREF>
        </P-PORT-PROTOTYPE>
      </PORTS>
      <INTERNAL-BEHAVIORS>
        <SWC-INTERNAL-BEHAVIOR>
          <SHORT-NAME>OutputBehavior</SHORT-NAME>
          <RUNNABLES>
            <RUNNABLE-ENTITY>
              <SHORT-NAME>OutputRunnable</SHORT-NAME>
            </RUNNABLE-ENTITY>
          </RUNNABLES>
        </SWC-INTERNAL-BEHAVIOR>
      </INTERNAL-BEHAVIORS>
    </APPLICATION-SW-COMPONENT-TYPE>
    <COMPOSITION-SW-COMPONENT-TYPE>
      <SHORT-NAME>TopLevelComposition</SHORT-NAME>
      <COMPONENTS>
        <SW-COMPONENT-PROTOTYPE>
          <SHORT-NAME>sensorComponent</SHORT-NAME>
          <TYPE-TREF DEST="SENSOR-ACTUATOR-SW-COMPONENT-TYPE">/SensorPackage/SensorComponent</TYPE-TREF>
        </SW-COMPONENT-PROTOTYPE>
        <SW-COMPONENT-PROTOTYPE>
          <SHORT-NAME>conditioningComponent</SHORT-NAME>
          <TYPE-TREF DEST="APPLICATION-SW-COMPONENT-TYPE">/SensorPackage/ConditioningComponent</TYPE-TREF>
        </SW-COMPONENT-PROTOTYPE>
        <SW-COMPONENT-PROTOTYPE>
          <SHORT-NAME>outputComponent</SHORT-NAME>
          <TYPE-TREF DEST="APPLICATION-SW-COMPONENT-TYPE">/SensorPackage/OutputComponent</TYPE-TREF>
        </SW-COMPONENT-PROTOTYPE>
      </COMPONENTS>
    </COMPOSITION-SW-COMPONENT-TYPE>
  </ELEMENTS>
</AR-PACKAGE>
<AR-PACKAGE>
```

Listing C.16: SWC Descriptions and Interface Definitions

C.6.2 Test Cases - VFB Timing - Latency Constraints

```
        <LATENCY-TIMING-CONSTRAINT>
          <SHORT-NAME>InputVfbLatency</SHORT-NAME>
          <LATENCY-CONSTRAINT-TYPE>AGE</LATENCY-CONSTRAINT-TYPE>
          <SCOPE-REF DEST="TIMING-DESCRIPTION-EVENT-CHAIN">/TimingPackage/SensorVfbTiming/InputVfbChain</SCOPE-REF>
          <MINIMUM>
```

```
    <CSE-CODE>1</CSE-CODE>
    <CSE-CODE-FACTOR>40</CSE-CODE-FACTOR>
  </MINIMUM>
  <MAXIMUM>
    <CSE-CODE>1</CSE-CODE>
    <CSE-CODE-FACTOR>50</CSE-CODE-FACTOR>
  </MAXIMUM>
</LATENCY-TIMING-CONSTRAINT>
```

Listing C.17: LatencyConstraint and related events on VfbTiming view

C.6.3 Test Cases - VFB Timing - Execution Order Constraints

```
<EXECUTION-ORDER-CONSTRAINT>
  <SHORT-NAME>EOC1</SHORT-NAME>
  <ORDERED-ELEMENTS>
    <EOC-EXECUTABLE-ENTITY-REF>
      <SHORT-NAME>SensorRunnableRef</SHORT-NAME>
      <COMPONENT-IREF>
        <TARGET-COMPONENT-REF DEST="SW-COMPONENT-PROTOTYPE">/SensorPackage/TopLevelComposition/sensorComponent</
            TARGET-COMPONENT-REF>
      </COMPONENT-IREF>
      <EXECUTABLE-REF DEST="RUNNABLE-ENTITY">/SensorPackage/SensorComponent/SensorBehavior/SensorRunnable</
          EXECUTABLE-REF>
      <SUCCESSOR-REFS>
        <SUCCESSOR-REF DEST="EOC-EXECUTABLE-ENTITY-REF">/TimingPackage/SensorVfbTiming/EOC1/
            ConditioningRunnableRef</SUCCESSOR-REF>
      </SUCCESSOR-REFS>
    </EOC-EXECUTABLE-ENTITY-REF>
    <EOC-EXECUTABLE-ENTITY-REF>
      <SHORT-NAME>ConditioningRunnableRef</SHORT-NAME>
      <COMPONENT-IREF>
        <TARGET-COMPONENT-REF DEST="SW-COMPONENT-PROTOTYPE">/SensorPackage/TopLevelComposition/
            conditioningComponent</TARGET-COMPONENT-REF>
      </COMPONENT-IREF>
      <EXECUTABLE-REF DEST="RUNNABLE-ENTITY">/SensorPackage/ConditioningComponent/ConditioningBehavior/
          ConditioningRunnable</EXECUTABLE-REF>
      <SUCCESSOR-REFS>
        <SUCCESSOR-REF DEST="EOC-EXECUTABLE-ENTITY-REF">/TimingPackage/SensorVfbTiming/EOC1/OutputRunnableRef</
            SUCCESSOR-REF>
      </SUCCESSOR-REFS>
    </EOC-EXECUTABLE-ENTITY-REF>
    <EOC-EXECUTABLE-ENTITY-REF>
      <SHORT-NAME>OutputRunnableRef</SHORT-NAME>
      <COMPONENT-IREF>
        <TARGET-COMPONENT-REF DEST="SW-COMPONENT-PROTOTYPE">/SensorPackage/TopLevelComposition/outputComponent</
            TARGET-COMPONENT-REF>
      </COMPONENT-IREF>
      <EXECUTABLE-REF DEST="RUNNABLE-ENTITY">/SensorPackage/OutputComponent/OutputBehavior/OutputRunnable</
          EXECUTABLE-REF>
    </EOC-EXECUTABLE-ENTITY-REF>
  </ORDERED-ELEMENTS>
</EXECUTION-ORDER-CONSTRAINT>
```

Listing C.18: Execution Order Constraint for Three Runnable Entities

C.6.4 Test Cases - COM Frame Timing

```
<TD-EVENT-FRAME>
  <SHORT-NAME>DataTransmitted</SHORT-NAME>
  <FRAME-REF DEST="FLEXRAY-FRAME">/SystemDescriptionPackage/SensorFrame</FRAME-REF>
  <PHYSICAL-CHANNEL-REF DEST="FLEXRAY-PHYSICAL-CHANNEL">/SystemDescriptionPackage/SampleFrCluster/FrChannel10MBit
      </PHYSICAL-CHANNEL-REF>
  <TD-EVENT-TYPE>FRAME-TRANSMITTED-ON-BUS</TD-EVENT-TYPE>
</TD-EVENT-FRAME>
```

Listing C.19: Event describing the point in time where data is sent on the bus

C.6.5 Test Cases - COM Frame Timing - Timing Description Event Chain

```
<TIMING-DESCRIPTION-EVENT-CHAIN>
  <SHORT-NAME>SensorEcuChain</SHORT-NAME>
  <STIMULUS-REF DEST="TD-EVENT-VARIABLE-DATA-PROTOTYPE">/TimingPackage/SensorVfbTiming/ConditioningSent</STIMULUS-
      REF>
  <RESPONSE-REF DEST="TD-EVENT-FRAME">/TimingPackage/SensorEcuTiming/DataTransmitted</RESPONSE-REF>
</TIMING-DESCRIPTION-EVENT-CHAIN>
```

Listing C.20: Event chain describing the sending path of data

C.6.6 Test Cases - COM Frame Timing - Latency Constraint

```
<LATENCY-TIMING-CONSTRAINT>
  <SHORT-NAME>SensorEcuLatency</SHORT-NAME>
  <LATENCY-CONSTRAINT-TYPE>REACTION</LATENCY-CONSTRAINT-TYPE>
  <SCOPE-REF DEST="TIMING-DESCRIPTION-EVENT-CHAIN">/TimingPackage/SensorEcuTiming/SensorEcuChain</SCOPE-REF>
  <MAXIMUM>
    <CSE-CODE>1</CSE-CODE>
    <CSE-CODE-FACTOR>400</CSE-CODE-FACTOR>
  </MAXIMUM>
</LATENCY-TIMING-CONSTRAINT>
```

Listing C.21: Latency constraint prescribing the maximum latency of sending path within the ECU

C.7 Test Cases - Engine Control

C.7.1 Test Cases - Engine Control - Requirement_1

```
<VFB-TIMING>
  <SHORT-NAME>EngineControlVfbTiming1</SHORT-NAME>
  <TIMING-DESCRIPTIONS>
    <TD-EVENT-VARIABLE-DATA-PROTOTYPE>
      <SHORT-NAME>RAcceleratorPedalPositionSensorReceived</SHORT-NAME>
      <IS-EXTERNAL>false</IS-EXTERNAL>
      <PORT-PROTOTYPE-IREF>
        <R-PORT-IN-COMPOSITION-INSTANCE-REF>
          <TARGET-R-PORT-REF DEST="R-PORT-PROTOTYPE">/Components/AcceleratorPedal/RAcceleratorPedalPositionSensor</
              TARGET-R-PORT-REF>
        </R-PORT-IN-COMPOSITION-INSTANCE-REF>
      </PORT-PROTOTYPE-IREF>
      <DATA-ELEMENT-REF DEST="VARIABLE-DATA-PROTOTYPE">/Interfaces/IAcceleratorPedalPositionSensor/
          AcceleratorPedalPositionSensor</DATA-ELEMENT-REF>
      <TD-EVENT-VARIABLE-DATA-PROTOTYPE-TYPE>VARIABLE-DATA-PROTOTYPE-RECEIVED</TD-EVENT-VARIABLE-DATA-PROTOTYPE-TYPE>
    </TD-EVENT-VARIABLE-DATA-PROTOTYPE>
    <TD-EVENT-VARIABLE-DATA-PROTOTYPE>
      <SHORT-NAME>PAcceleratorPedalPositionSent</SHORT-NAME>
      <IS-EXTERNAL>false</IS-EXTERNAL>
      <PORT-PROTOTYPE-IREF>
        <P-PORT-IN-COMPOSITION-INSTANCE-REF>
          <TARGET-P-PORT-REF DEST="P-PORT-PROTOTYPE">/Components/AcceleratorPedal/PAcceleratorPedalPosition</TARGET-P-
              PORT-REF>
        </P-PORT-IN-COMPOSITION-INSTANCE-REF>
      </PORT-PROTOTYPE-IREF>
      <DATA-ELEMENT-REF DEST="VARIABLE-DATA-PROTOTYPE">/Interfaces/IAcceleratorPedalPosition/AcceleratorPedalPosition<
          /DATA-ELEMENT-REF>
      <TD-EVENT-VARIABLE-DATA-PROTOTYPE-TYPE>VARIABLE-DATA-PROTOTYPE-SENT</TD-EVENT-VARIABLE-DATA-PROTOTYPE-TYPE>
    </TD-EVENT-VARIABLE-DATA-PROTOTYPE>
    <TD-EVENT-VARIABLE-DATA-PROTOTYPE>
      <SHORT-NAME>RAcceleratorPedalPositionReceived</SHORT-NAME>
      <IS-EXTERNAL>false</IS-EXTERNAL>
      <PORT-PROTOTYPE-IREF>
        <R-PORT-IN-COMPOSITION-INSTANCE-REF>
          <TARGET-R-PORT-REF DEST="R-PORT-PROTOTYPE">/Components/AcceleratorPedalVoter/RAcceleratorPedalPosition</
              TARGET-R-PORT-REF>
        </R-PORT-IN-COMPOSITION-INSTANCE-REF>
      </PORT-PROTOTYPE-IREF>
      <DATA-ELEMENT-REF DEST="VARIABLE-DATA-PROTOTYPE">/Interfaces/IAcceleratorPedalPosition/AcceleratorPedalPosition<
          /DATA-ELEMENT-REF>
      <TD-EVENT-VARIABLE-DATA-PROTOTYPE-TYPE>VARIABLE-DATA-PROTOTYPE-RECEIVED</TD-EVENT-VARIABLE-DATA-PROTOTYPE-TYPE>
    </TD-EVENT-VARIABLE-DATA-PROTOTYPE>
    <TD-EVENT-VARIABLE-DATA-PROTOTYPE>
      <SHORT-NAME>PVotedPedalPositionSent</SHORT-NAME>
      <IS-EXTERNAL>false</IS-EXTERNAL>
      <PORT-PROTOTYPE-IREF>
        <P-PORT-IN-COMPOSITION-INSTANCE-REF>
          <TARGET-P-PORT-REF DEST="P-PORT-PROTOTYPE">/Components/AcceleratorPedalVoter/PVotedPedalPosition</TARGET-P-
              PORT-REF>
        </P-PORT-IN-COMPOSITION-INSTANCE-REF>
      </PORT-PROTOTYPE-IREF>
      <DATA-ELEMENT-REF DEST="VARIABLE-DATA-PROTOTYPE">/Interfaces/IVotedPedalPosition/VotedPedalPosition</DATA-
          ELEMENT-REF>
      <TD-EVENT-VARIABLE-DATA-PROTOTYPE-TYPE>VARIABLE-DATA-PROTOTYPE-SENT</TD-EVENT-VARIABLE-DATA-PROTOTYPE-TYPE>
    </TD-EVENT-VARIABLE-DATA-PROTOTYPE>
    <TD-EVENT-VARIABLE-DATA-PROTOTYPE>
      <SHORT-NAME>RVotedPedalPositionReceived</SHORT-NAME>
      <IS-EXTERNAL>false</IS-EXTERNAL>
      <PORT-PROTOTYPE-IREF>
        <R-PORT-IN-COMPOSITION-INSTANCE-REF>
          <TARGET-R-PORT-REF DEST="R-PORT-PROTOTYPE">/Components/ThrottleController/RVotedPedalPosition</TARGET-R-PORT
              -REF>
        </R-PORT-IN-COMPOSITION-INSTANCE-REF>
      </PORT-PROTOTYPE-IREF>
      <DATA-ELEMENT-REF DEST="VARIABLE-DATA-PROTOTYPE">/Interfaces/IVotedPedalPosition/VotedPedalPosition</DATA-
          ELEMENT-REF>
      <TD-EVENT-VARIABLE-DATA-PROTOTYPE-TYPE>VARIABLE-DATA-PROTOTYPE-RECEIVED</TD-EVENT-VARIABLE-DATA-PROTOTYPE-TYPE>
    </TD-EVENT-VARIABLE-DATA-PROTOTYPE>
    <TD-EVENT-VARIABLE-DATA-PROTOTYPE>
      <SHORT-NAME>PUnlimitedThrottlePositionSent</SHORT-NAME>
      <IS-EXTERNAL>false</IS-EXTERNAL>
      <PORT-PROTOTYPE-IREF>
```

```
      <P-PORT-IN-COMPOSITION-INSTANCE-REF>
        <TARGET-P-PORT-REF DEST="P-PORT-PROTOTYPE">/Components/ThrottleController/PUnlimitedThrottlePosition</TARGET
            -P-PORT-REF>
      </P-PORT-IN-COMPOSITION-INSTANCE-REF>
    </PORT-PROTOTYPE-IREF>
    <DATA-ELEMENT-REF DEST="VARIABLE-DATA-PROTOTYPE">/Interfaces/IUnlimitedThrottlePosition/
        UnlimitedThrottlePosition</DATA-ELEMENT-REF>
    <TD-EVENT-VARIABLE-DATA-PROTOTYPE-TYPE>VARIABLE-DATA-PROTOTYPE-SENT</TD-EVENT-VARIABLE-DATA-PROTOTYPE-TYPE>
  </TD-EVENT-VARIABLE-DATA-PROTOTYPE>
  <TD-EVENT-VARIABLE-DATA-PROTOTYPE>
    <SHORT-NAME>RUnlimitedThrottlePositionReceived</SHORT-NAME>
    <IS-EXTERNAL>false</IS-EXTERNAL>
    <PORT-PROTOTYPE-IREF>
      <R-PORT-IN-COMPOSITION-INSTANCE-REF>
        <TARGET-R-PORT-REF DEST="R-PORT-PROTOTYPE">/Components/ThrottleActuator/RUnlimitedThrottlePosition</TARGET-R
            -PORT-REF>
      </R-PORT-IN-COMPOSITION-INSTANCE-REF>
    </PORT-PROTOTYPE-IREF>
    <DATA-ELEMENT-REF DEST="VARIABLE-DATA-PROTOTYPE">/Interfaces/IUnlimitedThrottlePosition/
        UnlimitedThrottlePosition</DATA-ELEMENT-REF>
    <TD-EVENT-VARIABLE-DATA-PROTOTYPE-TYPE>VARIABLE-DATA-PROTOTYPE-RECEIVED</TD-EVENT-VARIABLE-DATA-PROTOTYPE-TYPE>
  </TD-EVENT-VARIABLE-DATA-PROTOTYPE>
  <TD-EVENT-VARIABLE-DATA-PROTOTYPE>
    <SHORT-NAME>PUnlimitedThrottlePositionActuatorSent</SHORT-NAME>
    <IS-EXTERNAL>false</IS-EXTERNAL>
    <PORT-PROTOTYPE-IREF>
      <P-PORT-IN-COMPOSITION-INSTANCE-REF>
        <TARGET-P-PORT-REF DEST="P-PORT-PROTOTYPE">/Components/ThrottleActuator/PUnlimitedThrottlePositionActuator</
            TARGET-P-PORT-REF>
      </P-PORT-IN-COMPOSITION-INSTANCE-REF>
    </PORT-PROTOTYPE-IREF>
    <DATA-ELEMENT-REF DEST="VARIABLE-DATA-PROTOTYPE">/Interfaces/IUnlimitedThrottlePosition/
        UnlimitedThrottlePosition</DATA-ELEMENT-REF>
    <TD-EVENT-VARIABLE-DATA-PROTOTYPE-TYPE>VARIABLE-DATA-PROTOTYPE-SENT</TD-EVENT-VARIABLE-DATA-PROTOTYPE-TYPE>
  </TD-EVENT-VARIABLE-DATA-PROTOTYPE>
  <TIMING-DESCRIPTION-EVENT-CHAIN>
    <SHORT-NAME>TimingChain1Seg0</SHORT-NAME>
    <STIMULUS-REF DEST="TD-EVENT-VARIABLE-DATA-PROTOTYPE">/Timing/EngineControlVfbTiming1/
        RAcceleratorPedalPositionSensorReceived</STIMULUS-REF>
    <RESPONSE-REF DEST="TD-EVENT-VARIABLE-DATA-PROTOTYPE">/Timing/EngineControlVfbTiming1/
        PAcceleratorPedalPositionSent</RESPONSE-REF>
  </TIMING-DESCRIPTION-EVENT-CHAIN>
  <TIMING-DESCRIPTION-EVENT-CHAIN>
    <SHORT-NAME>TimingChain1Seg1</SHORT-NAME>
    <STIMULUS-REF DEST="TD-EVENT-VARIABLE-DATA-PROTOTYPE">/Timing/EngineControlVfbTiming1/
        PAcceleratorPedalPositionSent</STIMULUS-REF>
    <RESPONSE-REF DEST="TD-EVENT-VARIABLE-DATA-PROTOTYPE">/Timing/EngineControlVfbTiming1/
        RAcceleratorPedalPositionReceived</RESPONSE-REF>
  </TIMING-DESCRIPTION-EVENT-CHAIN>
  <TIMING-DESCRIPTION-EVENT-CHAIN>
    <SHORT-NAME>TimingChain1Seg1_1</SHORT-NAME>
    <STIMULUS-REF DEST="TD-EVENT-VARIABLE-DATA-PROTOTYPE">/Timing/EngineControlVfbTiming1/
        RAcceleratorPedalPositionReceived</STIMULUS-REF>
    <RESPONSE-REF DEST="TD-EVENT-VARIABLE-DATA-PROTOTYPE">/Timing/EngineControlVfbTiming1/PVotedPedalPositionSent</
        RESPONSE-REF>
  </TIMING-DESCRIPTION-EVENT-CHAIN>
  <TIMING-DESCRIPTION-EVENT-CHAIN>
    <SHORT-NAME>TimingChain1Seg2</SHORT-NAME>
    <STIMULUS-REF DEST="TD-EVENT-VARIABLE-DATA-PROTOTYPE">/Timing/EngineControlVfbTiming1/PVotedPedalPositionSent</
        STIMULUS-REF>
    <RESPONSE-REF DEST="TD-EVENT-VARIABLE-DATA-PROTOTYPE">/Timing/EngineControlVfbTiming1/
        RVotedPedalPositionReceived</RESPONSE-REF>
  </TIMING-DESCRIPTION-EVENT-CHAIN>
  <TIMING-DESCRIPTION-EVENT-CHAIN>
    <SHORT-NAME>TimingChain1Seg2_1</SHORT-NAME>
    <STIMULUS-REF DEST="TD-EVENT-VARIABLE-DATA-PROTOTYPE">/Timing/EngineControlVfbTiming1/
        RVotedPedalPositionReceived</STIMULUS-REF>
    <RESPONSE-REF DEST="TD-EVENT-VARIABLE-DATA-PROTOTYPE">/Timing/EngineControlVfbTiming1/
        PUnlimitedThrottlePositionSent</RESPONSE-REF>
  </TIMING-DESCRIPTION-EVENT-CHAIN>
  <TIMING-DESCRIPTION-EVENT-CHAIN>
    <SHORT-NAME>TimingChain1Seg3</SHORT-NAME>
    <STIMULUS-REF DEST="TD-EVENT-VARIABLE-DATA-PROTOTYPE">/Timing/EngineControlVfbTiming1/
        PUnlimitedThrottlePositionSent</STIMULUS-REF>
    <RESPONSE-REF DEST="TD-EVENT-VARIABLE-DATA-PROTOTYPE">/Timing/EngineControlVfbTiming1/
        RUnlimitedThrottlePositionReceived</RESPONSE-REF>
  </TIMING-DESCRIPTION-EVENT-CHAIN>
  <TIMING-DESCRIPTION-EVENT-CHAIN>
    <SHORT-NAME>TimingChain1Seg4</SHORT-NAME>
    <STIMULUS-REF DEST="TD-EVENT-VARIABLE-DATA-PROTOTYPE">/Timing/EngineControlVfbTiming1/
        RUnlimitedThrottlePositionReceived</STIMULUS-REF>
    <RESPONSE-REF DEST="TD-EVENT-VARIABLE-DATA-PROTOTYPE">/Timing/EngineControlVfbTiming1/
        PUnlimitedThrottlePositionActuatorSent</RESPONSE-REF>
  </TIMING-DESCRIPTION-EVENT-CHAIN>
  <TIMING-DESCRIPTION-EVENT-CHAIN>
    <SHORT-NAME>TimingChain1AllSeg</SHORT-NAME>
    <STIMULUS-REF DEST="TD-EVENT-VARIABLE-DATA-PROTOTYPE">/Timing/EngineControlVfbTiming1/
        RAcceleratorPedalPositionSensorReceived</STIMULUS-REF>
    <RESPONSE-REF DEST="TD-EVENT-VARIABLE-DATA-PROTOTYPE">/Timing/EngineControlVfbTiming1/
        PUnlimitedThrottlePositionActuatorSent</RESPONSE-REF>
    <SEGMENT-REFS>
      <SEGMENT-REF DEST="TIMING-DESCRIPTION-EVENT-CHAIN">/Timing/EngineControlVfbTiming1/TimingChain1Seg0</SEGMENT-
          REF>
      <SEGMENT-REF DEST="TIMING-DESCRIPTION-EVENT-CHAIN">/Timing/EngineControlVfbTiming1/TimingChain1Seg1</SEGMENT-
          REF>
```

```
        <SEGMENT-REF DEST="TIMING-DESCRIPTION-EVENT-CHAIN">/Timing/EngineControlVfbTiming1/TimingChain1Seg1_1</SEGMENT
            -REF>
        <SEGMENT-REF DEST="TIMING-DESCRIPTION-EVENT-CHAIN">/Timing/EngineControlVfbTiming1/TimingChain1Seg2</SEGMENT-
            REF>
        <SEGMENT-REF DEST="TIMING-DESCRIPTION-EVENT-CHAIN">/Timing/EngineControlVfbTiming1/TimingChain1Seg2_1</SEGMENT
            -REF>
        <SEGMENT-REF DEST="TIMING-DESCRIPTION-EVENT-CHAIN">/Timing/EngineControlVfbTiming1/TimingChain1Seg3</SEGMENT-
            REF>
        <SEGMENT-REF DEST="TIMING-DESCRIPTION-EVENT-CHAIN">/Timing/EngineControlVfbTiming1/TimingChain1Seg4</SEGMENT-
            REF>
      </SEGMENT-REFS>
    </TIMING-DESCRIPTION-EVENT-CHAIN>
  </TIMING-DESCRIPTIONS>
  <TIMING-REQUIREMENTS>
    <LATENCY-TIMING-CONSTRAINT>
      <SHORT-NAME>TimingChain1AllSegLatency</SHORT-NAME>
      <LATENCY-CONSTRAINT-TYPE>REACTION</LATENCY-CONSTRAINT-TYPE>
      <SCOPE-REF DEST="TIMING-DESCRIPTION-EVENT-CHAIN">/Timing/EngineControlVfbTiming1/TimingChain1AllSeg</SCOPE-REF>
      <MINIMUM>
        <CSE-CODE>1</CSE-CODE>
        <CSE-CODE-FACTOR>28</CSE-CODE-FACTOR>
      </MINIMUM>
      <MAXIMUM>
        <CSE-CODE>1</CSE-CODE>
        <CSE-CODE-FACTOR>30</CSE-CODE-FACTOR>
      </MAXIMUM>
    </LATENCY-TIMING-CONSTRAINT>
  </TIMING-REQUIREMENTS>
  <COMPONENT-REF DEST="COMPOSITION-SW-COMPONENT-TYPE">/Components/EngineControl</COMPONENT-REF>
</VFB-TIMING>
```

Listing C.22: Event Definitions and Constraints for `Requirement_1`

C.7.2 Test Cases - Engine Control - `Requirement_2`

```
<VFB-TIMING>
  <SHORT-NAME>EngineControlVfbTiming2</SHORT-NAME>
  <TIMING-DESCRIPTIONS>
    <TD-EVENT-VARIABLE-DATA-PROTOTYPE>
      <SHORT-NAME>RThrottlePositionSensorReceived</SHORT-NAME>
      <IS-EXTERNAL>false</IS-EXTERNAL>
      <PORT-PROTOTYPE-IREF>
        <R-PORT-IN-COMPOSITION-INSTANCE-REF>
          <TARGET-R-PORT-REF DEST="R-PORT-PROTOTYPE">/Components/ThrottleSensor/RThrottlePositionSensor</TARGET-R-PORT
              -REF>
        </R-PORT-IN-COMPOSITION-INSTANCE-REF>
      </PORT-PROTOTYPE-IREF>
      <DATA-ELEMENT-REF DEST="VARIABLE-DATA-PROTOTYPE">/Interfaces/IThrottlePositionSensor/ThrottlePositionSensor</
          DATA-ELEMENT-REF>
      <TD-EVENT-VARIABLE-DATA-PROTOTYPE-TYPE>VARIABLE-DATA-PROTOTYPE-RECEIVED</TD-EVENT-VARIABLE-DATA-PROTOTYPE-TYPE>
    </TD-EVENT-VARIABLE-DATA-PROTOTYPE>
    <TD-EVENT-VARIABLE-DATA-PROTOTYPE>
      <SHORT-NAME>PThrottlePositionSent</SHORT-NAME>
      <IS-EXTERNAL>false</IS-EXTERNAL>
      <PORT-PROTOTYPE-IREF>
        <P-PORT-IN-COMPOSITION-INSTANCE-REF>
          <TARGET-P-PORT-REF DEST="P-PORT-PROTOTYPE">/Components/ThrottleSensor/PThrottlePosition</TARGET-P-PORT-REF>
        </P-PORT-IN-COMPOSITION-INSTANCE-REF>
      </PORT-PROTOTYPE-IREF>
      <DATA-ELEMENT-REF DEST="VARIABLE-DATA-PROTOTYPE">/Interfaces/IThrottlePosition/ThrottlePosition</DATA-ELEMENT-
          REF>
      <TD-EVENT-VARIABLE-DATA-PROTOTYPE-TYPE>VARIABLE-DATA-PROTOTYPE-SENT</TD-EVENT-VARIABLE-DATA-PROTOTYPE-TYPE>
    </TD-EVENT-VARIABLE-DATA-PROTOTYPE>
    <TD-EVENT-VARIABLE-DATA-PROTOTYPE>
      <SHORT-NAME>RThrottlePositionReceived</SHORT-NAME>
      <IS-EXTERNAL>false</IS-EXTERNAL>
      <PORT-PROTOTYPE-IREF>
        <R-PORT-IN-COMPOSITION-INSTANCE-REF>
          <TARGET-R-PORT-REF DEST="R-PORT-PROTOTYPE">/Components/BaseFuelMass/RThrottlePosition</TARGET-R-PORT-REF>
        </R-PORT-IN-COMPOSITION-INSTANCE-REF>
      </PORT-PROTOTYPE-IREF>
      <DATA-ELEMENT-REF DEST="VARIABLE-DATA-PROTOTYPE">/Interfaces/IThrottlePosition/ThrottlePosition</DATA-ELEMENT-
          REF>
      <TD-EVENT-VARIABLE-DATA-PROTOTYPE-TYPE>VARIABLE-DATA-PROTOTYPE-RECEIVED</TD-EVENT-VARIABLE-DATA-PROTOTYPE-TYPE>
    </TD-EVENT-VARIABLE-DATA-PROTOTYPE>
    <TIMING-DESCRIPTION-EVENT-CHAIN>
      <SHORT-NAME>TimingChain2Seg0</SHORT-NAME>
      <STIMULUS-REF DEST="TD-EVENT-VARIABLE-DATA-PROTOTYPE">/Timing/EngineControlVfbTiming2/
          RThrottlePositionSensorReceived</STIMULUS-REF>
      <RESPONSE-REF DEST="TD-EVENT-VARIABLE-DATA-PROTOTYPE">/Timing/EngineControlVfbTiming2/PThrottlePositionSent</
          RESPONSE-REF>
    </TIMING-DESCRIPTION-EVENT-CHAIN>
    <TIMING-DESCRIPTION-EVENT-CHAIN>
      <SHORT-NAME>TimingChain2Seg1</SHORT-NAME>
      <STIMULUS-REF DEST="TD-EVENT-VARIABLE-DATA-PROTOTYPE">/Timing/EngineControlVfbTiming2/PThrottlePositionSent</
          STIMULUS-REF>
      <RESPONSE-REF DEST="TD-EVENT-VARIABLE-DATA-PROTOTYPE">/Timing/EngineControlVfbTiming2/RThrottlePositionReceived<
          /RESPONSE-REF>
    </TIMING-DESCRIPTION-EVENT-CHAIN>
    <TIMING-DESCRIPTION-EVENT-CHAIN>
      <SHORT-NAME>TimingChain2AllSeg</SHORT-NAME>
```

```
      <STIMULUS-REF DEST="TD-EVENT-VARIABLE-DATA-PROTOTYPE">/Timing/EngineControlVfbTiming2/
          RThrottlePositionSensorReceived</STIMULUS-REF>
      <RESPONSE-REF DEST="TD-EVENT-VARIABLE-DATA-PROTOTYPE">/Timing/EngineControlVfbTiming2/RThrottlePositionReceived<
          /RESPONSE-REF>
      <SEGMENT-REFS>
        <SEGMENT-REF DEST="TIMING-DESCRIPTION-EVENT-CHAIN">/Timing/EngineControlVfbTiming2/TimingChain2Seg0</SEGMENT-
            REF>
        <SEGMENT-REF DEST="TIMING-DESCRIPTION-EVENT-CHAIN">/Timing/EngineControlVfbTiming2/TimingChain2Seg1</SEGMENT-
            REF>
      </SEGMENT-REFS>
    </TIMING-DESCRIPTION-EVENT-CHAIN>
  </TIMING-DESCRIPTIONS>
  <TIMING-REQUIREMENTS>
    <LATENCY-TIMING-CONSTRAINT>
      <SHORT-NAME>TimingChain2AllSegLatency</SHORT-NAME>
      <LATENCY-CONSTRAINT-TYPE>AGE</LATENCY-CONSTRAINT-TYPE>
      <SCOPE-REF DEST="TIMING-DESCRIPTION-EVENT-CHAIN">/Timing/EngineControlVfbTiming2/TimingChain2Seg1</SCOPE-REF>
      <MAXIMUM>
        <CSE-CODE>3</CSE-CODE>
        <CSE-CODE-FACTOR>10</CSE-CODE-FACTOR>
      </MAXIMUM>
    </LATENCY-TIMING-CONSTRAINT>
  </TIMING-REQUIREMENTS>
</VFB-TIMING>
```

Listing C.23: Event Definitions and Constraints for `Requirement_2`

C.7.3 Test Cases - Engine Control - `Requirement_3`

```
<VFB-TIMING>
  <SHORT-NAME>EngineControlVfbTiming3</SHORT-NAME>
  <TIMING-DESCRIPTIONS>
    <TD-EVENT-VARIABLE-DATA-PROTOTYPE>
      <SHORT-NAME>PMafRateOutSent</SHORT-NAME>
      <IS-EXTERNAL>false</IS-EXTERNAL>
      <PORT-PROTOTYPE-IREF>
        <P-PORT-IN-COMPOSITION-INSTANCE-REF>
          <TARGET-P-PORT-REF DEST="P-PORT-PROTOTYPE">/Components/BaseFuelMass/PMafRateOut</TARGET-P-PORT-REF>
        </P-PORT-IN-COMPOSITION-INSTANCE-REF>
      </PORT-PROTOTYPE-IREF>
      <DATA-ELEMENT-REF DEST="VARIABLE-DATA-PROTOTYPE">/Interfaces/IMafRateOut/MafRateOut</DATA-ELEMENT-REF>
      <TD-EVENT-VARIABLE-DATA-PROTOTYPE-TYPE>VARIABLE-DATA-PROTOTYPE-SENT</TD-EVENT-VARIABLE-DATA-PROTOTYPE-TYPE>
    </TD-EVENT-VARIABLE-DATA-PROTOTYPE>
    <TD-EVENT-VARIABLE-DATA-PROTOTYPE>
      <SHORT-NAME>RMafRateOutReceived</SHORT-NAME>
      <IS-EXTERNAL>false</IS-EXTERNAL>
      <PORT-PROTOTYPE-IREF>
        <R-PORT-IN-COMPOSITION-INSTANCE-REF>
          <TARGET-R-PORT-REF DEST="R-PORT-PROTOTYPE">/Components/Ignition/RMafRateOut</TARGET-R-PORT-REF>
        </R-PORT-IN-COMPOSITION-INSTANCE-REF>
      </PORT-PROTOTYPE-IREF>
      <DATA-ELEMENT-REF DEST="VARIABLE-DATA-PROTOTYPE">/Interfaces/IMafRateOut/MafRateOut</DATA-ELEMENT-REF>
      <TD-EVENT-VARIABLE-DATA-PROTOTYPE-TYPE>VARIABLE-DATA-PROTOTYPE-RECEIVED</TD-EVENT-VARIABLE-DATA-PROTOTYPE-TYPE>
    </TD-EVENT-VARIABLE-DATA-PROTOTYPE>
    <TD-EVENT-VARIABLE-DATA-PROTOTYPE>
      <SHORT-NAME>PIgnitionTimingSent</SHORT-NAME>
      <IS-EXTERNAL>false</IS-EXTERNAL>
      <PORT-PROTOTYPE-IREF>
        <P-PORT-IN-COMPOSITION-INSTANCE-REF>
          <TARGET-P-PORT-REF DEST="P-PORT-PROTOTYPE">/Components/Ignition/PIgnitionTiming</TARGET-P-PORT-REF>
        </P-PORT-IN-COMPOSITION-INSTANCE-REF>
      </PORT-PROTOTYPE-IREF>
      <DATA-ELEMENT-REF DEST="VARIABLE-DATA-PROTOTYPE">/Interfaces/IIgnitionTiming/IgnitionTiming</DATA-ELEMENT-REF>
      <TD-EVENT-VARIABLE-DATA-PROTOTYPE-TYPE>VARIABLE-DATA-PROTOTYPE-SENT</TD-EVENT-VARIABLE-DATA-PROTOTYPE-TYPE>
    </TD-EVENT-VARIABLE-DATA-PROTOTYPE>
    <TD-EVENT-VARIABLE-DATA-PROTOTYPE>
      <SHORT-NAME>RIgnitionTimingReceived</SHORT-NAME>
      <IS-EXTERNAL>false</IS-EXTERNAL>
      <PORT-PROTOTYPE-IREF>
        <R-PORT-IN-COMPOSITION-INSTANCE-REF>
          <TARGET-R-PORT-REF DEST="R-PORT-PROTOTYPE">/Components/IngnitionActuator/RIgnitionTiming</TARGET-R-PORT-REF>
        </R-PORT-IN-COMPOSITION-INSTANCE-REF>
      </PORT-PROTOTYPE-IREF>
      <DATA-ELEMENT-REF DEST="VARIABLE-DATA-PROTOTYPE">/Interfaces/IIgnitionTiming/IgnitionTiming</DATA-ELEMENT-REF>
      <TD-EVENT-VARIABLE-DATA-PROTOTYPE-TYPE>VARIABLE-DATA-PROTOTYPE-RECEIVED</TD-EVENT-VARIABLE-DATA-PROTOTYPE-TYPE>
    </TD-EVENT-VARIABLE-DATA-PROTOTYPE>
    <TIMING-DESCRIPTION-EVENT-CHAIN>
      <SHORT-NAME>TimingChain3Seg0</SHORT-NAME>
      <STIMULUS-REF DEST="TD-EVENT-VARIABLE-DATA-PROTOTYPE">/Timing/EngineControlVfbTiming1/
          RUnlimitedThrottlePositionReceived</STIMULUS-REF>
      <RESPONSE-REF DEST="TD-EVENT-VARIABLE-DATA-PROTOTYPE">/Timing/EngineControlVfbTiming3/PMafRateOutSent</RESPONSE-
          REF>
    </TIMING-DESCRIPTION-EVENT-CHAIN>
    <TIMING-DESCRIPTION-EVENT-CHAIN>
      <SHORT-NAME>TimingChain3Seg1</SHORT-NAME>
      <STIMULUS-REF DEST="TD-EVENT-VARIABLE-DATA-PROTOTYPE">/Timing/EngineControlVfbTiming3/PMafRateOutSent</STIMULUS-
          REF>
      <RESPONSE-REF DEST="TD-EVENT-VARIABLE-DATA-PROTOTYPE">/Timing/EngineControlVfbTiming3/RMafRateOutReceived</
          RESPONSE-REF>
      <SEGMENT-REFS>
        <SEGMENT-REF DEST="TIMING-DESCRIPTION-EVENT-CHAIN">/Timing/EngineControlVfbTiming3/TimingChain3Seg1_1</SEGMENT
            -REF>
```

```
      </SEGMENT-REFS>
    </TIMING-DESCRIPTION-EVENT-CHAIN>
    <TIMING-DESCRIPTION-EVENT-CHAIN>
      <SHORT-NAME>TimingChain3Seg1_1</SHORT-NAME>
      <STIMULUS-REF DEST="TD-EVENT-VARIABLE-DATA-PROTOTYPE">/Timing/EngineControlVfbTiming3/RMafRateOutReceived</
          STIMULUS-REF>
      <RESPONSE-REF DEST="TD-EVENT-VARIABLE-DATA-PROTOTYPE">/Timing/EngineControlVfbTiming3/PIgnitionTimingSent</
          RESPONSE-REF>
      <SEGMENT-REFS>
        <SEGMENT-REF DEST="TIMING-DESCRIPTION-EVENT-CHAIN">/Timing/EngineControlVfbTiming3/TimingChain3Seg1_1</SEGMENT
            -REF>
      </SEGMENT-REFS>
    </TIMING-DESCRIPTION-EVENT-CHAIN>
    <TIMING-DESCRIPTION-EVENT-CHAIN>
      <SHORT-NAME>TimingChain3Seg2</SHORT-NAME>
      <STIMULUS-REF DEST="TD-EVENT-VARIABLE-DATA-PROTOTYPE">/Timing/EngineControlVfbTiming3/PIgnitionTimingSent</
          STIMULUS-REF>
      <RESPONSE-REF DEST="TD-EVENT-VARIABLE-DATA-PROTOTYPE">/Timing/EngineControlVfbTiming3/RIgnitionTimingReceived</
          RESPONSE-REF>
    </TIMING-DESCRIPTION-EVENT-CHAIN>
    <TIMING-DESCRIPTION-EVENT-CHAIN>
      <SHORT-NAME>TimingChain3AllSeg</SHORT-NAME>
      <STIMULUS-REF DEST="TD-EVENT-VARIABLE-DATA-PROTOTYPE">/Timing/EngineControlVfbTiming1/
          RAcceleratorPedalPositionSensorReceived</STIMULUS-REF>
      <RESPONSE-REF DEST="TD-EVENT-VARIABLE-DATA-PROTOTYPE">/Timing/EngineControlVfbTiming3/RIgnitionTimingReceived</
          RESPONSE-REF>
      <SEGMENT-REFS>
        <SEGMENT-REF DEST="TIMING-DESCRIPTION-EVENT-CHAIN">/Timing/EngineControlVfbTiming1/TimingChain1AllSeg</SEGMENT
            -REF>
        <SEGMENT-REF DEST="TIMING-DESCRIPTION-EVENT-CHAIN">/Timing/EngineControlVfbTiming2/TimingChain2Seg0</SEGMENT-
            REF>
        <SEGMENT-REF DEST="TIMING-DESCRIPTION-EVENT-CHAIN">/Timing/EngineControlVfbTiming2/TimingChain2Seg1</SEGMENT-
            REF>
        <SEGMENT-REF DEST="TIMING-DESCRIPTION-EVENT-CHAIN">/Timing/EngineControlVfbTiming3/TimingChain3Seg0</SEGMENT-
            REF>
        <SEGMENT-REF DEST="TIMING-DESCRIPTION-EVENT-CHAIN">/Timing/EngineControlVfbTiming3/TimingChain3Seg1</SEGMENT-
            REF>
        <SEGMENT-REF DEST="TIMING-DESCRIPTION-EVENT-CHAIN">/Timing/EngineControlVfbTiming3/TimingChain3Seg1_1</SEGMENT
            -REF>
        <SEGMENT-REF DEST="TIMING-DESCRIPTION-EVENT-CHAIN">/Timing/EngineControlVfbTiming3/TimingChain3Seg2</SEGMENT-
            REF>
      </SEGMENT-REFS>
    </TIMING-DESCRIPTION-EVENT-CHAIN>
  </TIMING-DESCRIPTIONS>
  <TIMING-GUARANTEES>
    <LATENCY-TIMING-CONSTRAINT>
      <SHORT-NAME>TimingChain3AllSegLatency1</SHORT-NAME>
      <LATENCY-CONSTRAINT-TYPE>REACTION</LATENCY-CONSTRAINT-TYPE>
      <SCOPE-REF DEST="TIMING-DESCRIPTION-EVENT-CHAIN">/Timing/EngineControlVfbTiming3/TimingChain3AllSeg</SCOPE-REF>
      <MAXIMUM>
        <CSE-CODE>3</CSE-CODE>
        <CSE-CODE-FACTOR>50</CSE-CODE-FACTOR>
      </MAXIMUM>
    </LATENCY-TIMING-CONSTRAINT>
  </TIMING-GUARANTEES>
  <TIMING-REQUIREMENTS>
    <OFFSET-TIMING-CONSTRAINT>
      <SHORT-NAME>Otc</SHORT-NAME>
      <SOURCE-REF DEST="TD-EVENT-VARIABLE-DATA-PROTOTYPE">/Timing/EngineControlVfbTiming1/
          PUnlimitedThrottlePositionActuatorSent</SOURCE-REF>
      <TARGET-REF DEST="TD-EVENT-VARIABLE-DATA-PROTOTYPE">/Timing/EngineControlVfbTiming2/RThrottlePositionReceived</
          TARGET-REF>
      <MAXIMUM>
        <CSE-CODE>3</CSE-CODE>
        <CSE-CODE-FACTOR>5</CSE-CODE-FACTOR>
      </MAXIMUM>
    </OFFSET-TIMING-CONSTRAINT>
    <LATENCY-TIMING-CONSTRAINT>
      <SHORT-NAME>TimingChain3AllSegLatency2</SHORT-NAME>
      <LATENCY-CONSTRAINT-TYPE>REACTION</LATENCY-CONSTRAINT-TYPE>
      <SCOPE-REF DEST="TIMING-DESCRIPTION-EVENT-CHAIN">/Timing/EngineControlVfbTiming3/TimingChain3AllSeg</SCOPE-REF>
      <MAXIMUM>
        <CSE-CODE>3</CSE-CODE>
        <CSE-CODE-FACTOR>50</CSE-CODE-FACTOR>
      </MAXIMUM>
    </LATENCY-TIMING-CONSTRAINT>
  </TIMING-REQUIREMENTS>
</VFB-TIMING>
```

Listing C.24: Event Definitions and Constraints for `Requirement_3`

C.7.4 Test Cases - Engine Control - `Requirement_4`

```
<ECU-TIMING>
  <SHORT-NAME>EngineControlEcuTiming</SHORT-NAME>
  <TIMING-DESCRIPTIONS>
    <TD-EVENT-BSW-INTERNAL-BEHAVIOR>
      <SHORT-NAME>CamShaftISRActivated</SHORT-NAME>
      <BSW-MODULE-ENTITY-REF DEST="BSW-INTERRUPT-ENTITY">/Modules/CamShaft/CamShaftBehavior/CamShaftISR</BSW-MODULE-
          ENTITY-REF>
      <TD-EVENT-BSW-INTERNAL-BEHAVIOR-TYPE>BSW-MODULE-ENTITY-ACTIVATED</TD-EVENT-BSW-INTERNAL-BEHAVIOR-TYPE>
    </TD-EVENT-BSW-INTERNAL-BEHAVIOR>
```

```
    <TD-EVENT-BSW-INTERNAL-BEHAVIOR>
      <SHORT-NAME>CamShaftISRStarted</SHORT-NAME>
      <BSW-MODULE-ENTITY-REF DEST="BSW-INTERRUPT-ENTITY">/Modules/CamShaft/CamShaftBehavior/CamShaftISR</BSW-MODULE-
          ENTITY-REF>
      <TD-EVENT-BSW-INTERNAL-BEHAVIOR-TYPE>BSW-MODULE-ENTITY-STARTED</TD-EVENT-BSW-INTERNAL-BEHAVIOR-TYPE>
    </TD-EVENT-BSW-INTERNAL-BEHAVIOR>
    <TD-EVENT-BSW-INTERNAL-BEHAVIOR>
      <SHORT-NAME>CamShaftIsrTerminated</SHORT-NAME>
      <BSW-MODULE-ENTITY-REF DEST="BSW-INTERRUPT-ENTITY">/Modules/CamShaft/CamShaftBehavior/CamShaftISR</BSW-MODULE-
          ENTITY-REF>
      <TD-EVENT-BSW-INTERNAL-BEHAVIOR-TYPE>BSW-MODULE-ENTITY-TERMINATED</TD-EVENT-BSW-INTERNAL-BEHAVIOR-TYPE>
    </TD-EVENT-BSW-INTERNAL-BEHAVIOR>
    <TD-EVENT-SWC-INTERNAL-BEHAVIOR>
      <SHORT-NAME>IgnitionActuatorCalculationActivated</SHORT-NAME>
      <RUNNABLE-REF DEST="RUNNABLE-ENTITY">/Components/IngnitionActuator/IgnitionActuatorBehavior/
          IngnitionActuatorCalculation</RUNNABLE-REF>
      <TD-EVENT-SWC-INTERNAL-BEHAVIOR-TYPE>RUNNABLE-ENTITY-ACTIVATED</TD-EVENT-SWC-INTERNAL-BEHAVIOR-TYPE>
    </TD-EVENT-SWC-INTERNAL-BEHAVIOR>
    <TD-EVENT-SWC-INTERNAL-BEHAVIOR>
      <SHORT-NAME>IgnitionActuatorCalculationStarted</SHORT-NAME>
      <RUNNABLE-REF DEST="RUNNABLE-ENTITY">/Components/IngnitionActuator/IgnitionActuatorBehavior/
          IngnitionActuatorCalculation</RUNNABLE-REF>
      <TD-EVENT-SWC-INTERNAL-BEHAVIOR-TYPE>RUNNABLE-ENTITY-STARTED</TD-EVENT-SWC-INTERNAL-BEHAVIOR-TYPE>
    </TD-EVENT-SWC-INTERNAL-BEHAVIOR>
    <TD-EVENT-SWC-INTERNAL-BEHAVIOR>
      <SHORT-NAME>IgnitionActuatorCalculationTerminated</SHORT-NAME>
      <RUNNABLE-REF DEST="RUNNABLE-ENTITY">/Components/IngnitionActuator/IgnitionActuatorBehavior/
          IngnitionActuatorCalculation</RUNNABLE-REF>
      <TD-EVENT-SWC-INTERNAL-BEHAVIOR-TYPE>RUNNABLE-ENTITY-TERMINATED</TD-EVENT-SWC-INTERNAL-BEHAVIOR-TYPE>
    </TD-EVENT-SWC-INTERNAL-BEHAVIOR>
    <TIMING-DESCRIPTION-EVENT-CHAIN>
      <SHORT-NAME>TimingChain4Seg1</SHORT-NAME>
      <STIMULUS-REF DEST="TD-EVENT-BSW-INTERNAL-BEHAVIOR">/Timing/EngineControlEcuTiming/CamShaftISRStarted</STIMULUS-
          REF>
      <RESPONSE-REF DEST="TD-EVENT-BSW-INTERNAL-BEHAVIOR">/Timing/EngineControlEcuTiming/CamShaftIsrTerminated</
          RESPONSE-REF>
      <SEGMENT-REFS>
        <SEGMENT-REF DEST="TIMING-DESCRIPTION-EVENT-CHAIN">/Timing/EngineControlEcuTiming/TimingChain4Seg1</SEGMENT-
            REF>
      </SEGMENT-REFS>
    </TIMING-DESCRIPTION-EVENT-CHAIN>
    <TIMING-DESCRIPTION-EVENT-CHAIN>
      <SHORT-NAME>TimingChain4Seg2</SHORT-NAME>
      <STIMULUS-REF DEST="TD-EVENT-BSW-INTERNAL-BEHAVIOR">/Timing/EngineControlEcuTiming/CamShaftIsrTerminated</
          STIMULUS-REF>
      <RESPONSE-REF DEST="TD-EVENT-SWC-INTERNAL-BEHAVIOR">/Timing/EngineControlEcuTiming/
          IgnitionActuatorCalculationStarted</RESPONSE-REF>
      <SEGMENT-REFS>
        <SEGMENT-REF DEST="TIMING-DESCRIPTION-EVENT-CHAIN">/Timing/EngineControlEcuTiming/TimingChain4Seg2</SEGMENT-
            REF>
      </SEGMENT-REFS>
    </TIMING-DESCRIPTION-EVENT-CHAIN>
    <TIMING-DESCRIPTION-EVENT-CHAIN>
      <SHORT-NAME>TimingChain4Seg3</SHORT-NAME>
      <STIMULUS-REF DEST="TD-EVENT-SWC-INTERNAL-BEHAVIOR">/Timing/EngineControlEcuTiming/
          IgnitionActuatorCalculationStarted</STIMULUS-REF>
      <RESPONSE-REF DEST="TD-EVENT-SWC-INTERNAL-BEHAVIOR">/Timing/EngineControlEcuTiming/
          IgnitionActuatorCalculationTerminated</RESPONSE-REF>
      <SEGMENT-REFS>
        <SEGMENT-REF DEST="TIMING-DESCRIPTION-EVENT-CHAIN">/Timing/EngineControlEcuTiming/TimingChain4Seg3</SEGMENT-
            REF>
      </SEGMENT-REFS>
    </TIMING-DESCRIPTION-EVENT-CHAIN>
    <TIMING-DESCRIPTION-EVENT-CHAIN>
      <SHORT-NAME>TimingChain4AllSeg</SHORT-NAME>
      <STIMULUS-REF DEST="TD-EVENT-BSW-INTERNAL-BEHAVIOR">/Timing/EngineControlEcuTiming/CamShaftISRStarted</STIMULUS-
          REF>
      <RESPONSE-REF DEST="TD-EVENT-SWC-INTERNAL-BEHAVIOR">/Timing/EngineControlEcuTiming/
          IgnitionActuatorCalculationTerminated</RESPONSE-REF>
      <SEGMENT-REFS>
        <SEGMENT-REF DEST="TIMING-DESCRIPTION-EVENT-CHAIN">/Timing/EngineControlEcuTiming/TimingChain4Seg1</SEGMENT-
            REF>
        <SEGMENT-REF DEST="TIMING-DESCRIPTION-EVENT-CHAIN">/Timing/EngineControlEcuTiming/TimingChain4Seg2</SEGMENT-
            REF>
        <SEGMENT-REF DEST="TIMING-DESCRIPTION-EVENT-CHAIN">/Timing/EngineControlEcuTiming/TimingChain4Seg3</SEGMENT-
            REF>
      </SEGMENT-REFS>
    </TIMING-DESCRIPTION-EVENT-CHAIN>
  </TIMING-DESCRIPTIONS>
  <TIMING-REQUIREMENTS>
    <LATENCY-TIMING-CONSTRAINT>
      <SHORT-NAME>TimingChain4AllSegLatency</SHORT-NAME>
      <LATENCY-CONSTRAINT-TYPE>REACTION</LATENCY-CONSTRAINT-TYPE>
      <SCOPE-REF DEST="TIMING-DESCRIPTION-EVENT-CHAIN">/Timing/EngineControlEcuTiming/TimingChain4AllSeg</SCOPE-REF>
      <MAXIMUM>
        <CSE-CODE>3</CSE-CODE>
        <CSE-CODE-FACTOR>3</CSE-CODE-FACTOR>
      </MAXIMUM>
    </LATENCY-TIMING-CONSTRAINT>
  </TIMING-REQUIREMENTS>
</ECU-TIMING>
```

Listing C.25: Event Definitions and Constraints for `Requirement_4`

C.7.5 Test Cases - Engine Control - Requirement_5

```
<SWC-TIMING>
  <SHORT-NAME>EngineControlSwcTimingInjection</SHORT-NAME>
  <TIMING-DESCRIPTIONS>
    <TD-EVENT-SWC-INTERNAL-BEHAVIOR>
      <SHORT-NAME>InjectionMassCalculationActivated</SHORT-NAME>
      <RUNNABLE-REF DEST="RUNNABLE-ENTITY">/Components/IgnitionCDD/IgnitionCDDBehavior/InjectionMassCalculation</
          RUNNABLE-REF>
      <TD-EVENT-SWC-INTERNAL-BEHAVIOR-TYPE>RUNNABLE-ENTITY-ACTIVATED</TD-EVENT-SWC-INTERNAL-BEHAVIOR-TYPE>
    </TD-EVENT-SWC-INTERNAL-BEHAVIOR>
    <TD-EVENT-SWC-INTERNAL-BEHAVIOR>
      <SHORT-NAME>InjectionMassCalculationStarted</SHORT-NAME>
      <RUNNABLE-REF DEST="RUNNABLE-ENTITY">/Components/IgnitionCDD/IgnitionCDDBehavior/InjectionMassCalculation</
          RUNNABLE-REF>
      <TD-EVENT-SWC-INTERNAL-BEHAVIOR-TYPE>RUNNABLE-ENTITY-STARTED</TD-EVENT-SWC-INTERNAL-BEHAVIOR-TYPE>
    </TD-EVENT-SWC-INTERNAL-BEHAVIOR>
    <TD-EVENT-SWC-INTERNAL-BEHAVIOR>
      <SHORT-NAME>InjectionMassCalculationTerminated</SHORT-NAME>
      <RUNNABLE-REF DEST="RUNNABLE-ENTITY">/Components/IgnitionCDD/IgnitionCDDBehavior/InjectionMassCalculation</
          RUNNABLE-REF>
      <TD-EVENT-SWC-INTERNAL-BEHAVIOR-TYPE>RUNNABLE-ENTITY-TERMINATED</TD-EVENT-SWC-INTERNAL-BEHAVIOR-TYPE>
    </TD-EVENT-SWC-INTERNAL-BEHAVIOR>
    <TIMING-DESCRIPTION-EVENT-CHAIN>
      <SHORT-NAME>TimingChain5</SHORT-NAME>
      <STIMULUS-REF DEST="TD-EVENT-SWC-INTERNAL-BEHAVIOR">/Timing/EngineControlSwcTimingInjection/
          InjectionMassCalculationActivated</STIMULUS-REF>
      <RESPONSE-REF DEST="TD-EVENT-SWC-INTERNAL-BEHAVIOR">/Timing/EngineControlSwcTimingInjection/
          InjectionMassCalculationTerminated</RESPONSE-REF>
      <SEGMENT-REFS>
        <SEGMENT-REF DEST="TIMING-DESCRIPTION-EVENT-CHAIN">/Timing/EngineControlSwcTimingInjection/TimingChain5</
            SEGMENT-REF>
      </SEGMENT-REFS>
    </TIMING-DESCRIPTION-EVENT-CHAIN>
  </TIMING-DESCRIPTIONS>
  <TIMING-REQUIREMENTS>
    <LATENCY-TIMING-CONSTRAINT>
      <SHORT-NAME>TimingChain5Latency</SHORT-NAME>
      <LATENCY-CONSTRAINT-TYPE>REACTION</LATENCY-CONSTRAINT-TYPE>
      <SCOPE-REF DEST="TIMING-DESCRIPTION-EVENT-CHAIN">/Timing/EngineControlSwcTimingInjection/TimingChain5</SCOPE-REF
          >
      <MAXIMUM>
        <CSE-CODE>3</CSE-CODE>
        <CSE-CODE-FACTOR>20</CSE-CODE-FACTOR>
      </MAXIMUM>
    </LATENCY-TIMING-CONSTRAINT>
    <SPORADIC-EVENT-TRIGGERING>
      <SHORT-NAME>CalculateInjectionMassTriggeringConstraint</SHORT-NAME>
      <EVENT-REF DEST="TD-EVENT-SWC-INTERNAL-BEHAVIOR">/Timing/EngineControlSwcTimingInjection/
          InjectionMassCalculationActivated</EVENT-REF>
      <MAXIMUM-INTER-ARRIVAL-TIME>
        <CSE-CODE>3</CSE-CODE>
        <CSE-CODE-FACTOR>20</CSE-CODE-FACTOR>
      </MAXIMUM-INTER-ARRIVAL-TIME>
      <PERIOD>
        <CSE-CODE>3</CSE-CODE>
        <CSE-CODE-FACTOR>20</CSE-CODE-FACTOR>
      </PERIOD>
    </SPORADIC-EVENT-TRIGGERING>
  </TIMING-REQUIREMENTS>
  <BEHAVIOR-REF DEST="SWC-INTERNAL-BEHAVIOR">/Components/IgnitionCDD/IgnitionCDDBehavior</BEHAVIOR-REF>
</SWC-TIMING>
<SWC-TIMING>
  <SHORT-NAME>EngineControlSwcTimingIgnition</SHORT-NAME>
  <TIMING-DESCRIPTIONS>
    <TD-EVENT-SWC-INTERNAL-BEHAVIOR>
      <SHORT-NAME>IgnitionTimingCalculationActivated</SHORT-NAME>
      <RUNNABLE-REF DEST="RUNNABLE-ENTITY">/Components/Ignition/IngnitionBehavior/IgnitionTimingCalculation</RUNNABLE-
          REF>
      <TD-EVENT-SWC-INTERNAL-BEHAVIOR-TYPE>RUNNABLE-ENTITY-ACTIVATED</TD-EVENT-SWC-INTERNAL-BEHAVIOR-TYPE>
    </TD-EVENT-SWC-INTERNAL-BEHAVIOR>
    <TD-EVENT-SWC-INTERNAL-BEHAVIOR>
      <SHORT-NAME>IgnitionTimingCalculationStarted</SHORT-NAME>
      <RUNNABLE-REF DEST="RUNNABLE-ENTITY">/Components/Ignition/IngnitionBehavior/IgnitionTimingCalculation</RUNNABLE-
          REF>
      <TD-EVENT-SWC-INTERNAL-BEHAVIOR-TYPE>RUNNABLE-ENTITY-STARTED</TD-EVENT-SWC-INTERNAL-BEHAVIOR-TYPE>
    </TD-EVENT-SWC-INTERNAL-BEHAVIOR>
    <TD-EVENT-SWC-INTERNAL-BEHAVIOR>
      <SHORT-NAME>IgnitionTimingCalculationTerminated</SHORT-NAME>
      <RUNNABLE-REF DEST="RUNNABLE-ENTITY">/Components/Ignition/IngnitionBehavior/IgnitionTimingCalculation</RUNNABLE-
          REF>
      <TD-EVENT-SWC-INTERNAL-BEHAVIOR-TYPE>RUNNABLE-ENTITY-TERMINATED</TD-EVENT-SWC-INTERNAL-BEHAVIOR-TYPE>
    </TD-EVENT-SWC-INTERNAL-BEHAVIOR>
    <TIMING-DESCRIPTION-EVENT-CHAIN>
      <SHORT-NAME>TimingChain5</SHORT-NAME>
      <STIMULUS-REF DEST="TD-EVENT-SWC-INTERNAL-BEHAVIOR">/Timing/EngineControlSwcTimingIgnition/
          IgnitionTimingCalculationActivated</STIMULUS-REF>
      <RESPONSE-REF DEST="TD-EVENT-SWC-INTERNAL-BEHAVIOR">/Timing/EngineControlSwcTimingIgnition/
          IgnitionTimingCalculationTerminated</RESPONSE-REF>
      <SEGMENT-REFS>
        <SEGMENT-REF DEST="TIMING-DESCRIPTION-EVENT-CHAIN">/Timing/EngineControlSwcTimingIgnition/TimingChain5</
            SEGMENT-REF>
      </SEGMENT-REFS>
    </TIMING-DESCRIPTION-EVENT-CHAIN>
  </TIMING-DESCRIPTIONS>
```

```
  <TIMING-REQUIREMENTS>
    <PERIODIC-EVENT-TRIGGERING>
      <SHORT-NAME>CalculateIgnitionTimingTriggeringConstraint</SHORT-NAME>
      <JITTER>
        <CSE-CODE>3</CSE-CODE>
        <CSE-CODE-FACTOR>1</CSE-CODE-FACTOR>
      </JITTER>
      <PERIOD>
        <CSE-CODE>3</CSE-CODE>
        <CSE-CODE-FACTOR>20</CSE-CODE-FACTOR>
      </PERIOD>
    </PERIODIC-EVENT-TRIGGERING>
    <LATENCY-TIMING-CONSTRAINT>
      <SHORT-NAME>TimingChain5Latency</SHORT-NAME>
      <LATENCY-CONSTRAINT-TYPE>REACTION</LATENCY-CONSTRAINT-TYPE>
      <SCOPE-REF DEST="TIMING-DESCRIPTION-EVENT-CHAIN">/Timing/EngineControlSwcTimingIgnition/TimingChain5</SCOPE-REF>
      <MAXIMUM>
        <CSE-CODE>3</CSE-CODE>
        <CSE-CODE-FACTOR>20</CSE-CODE-FACTOR>
      </MAXIMUM>
    </LATENCY-TIMING-CONSTRAINT>
  </TIMING-REQUIREMENTS>
  <BEHAVIOR-REF DEST="SWC-INTERNAL-BEHAVIOR">/Components/Ignition/IngnitionBehavior</BEHAVIOR-REF>
</SWC-TIMING>
```

Listing C.26: Event Definitions and Constraints for `Requirement_5`

D Mentioned Class Tables

This chapter contains the remaining set of meta-class tables which are not shown directly in the main body of this document.

Class	**ARPackage**			
Note	AUTOSAR package, allowing to create top level packages to structure the contained ARElements. ARPackages are open sets. This means that in a file based description system multiple files can be used to partially describe the contents of a package. This is an extended version of MSR's SW-SYSTEM.			
Base	*ARObject*, *AtpBlueprint*, *CollectableElement*, *Identifiable*, *MultilanguageReferrable*, *Referrable*			
Aggregated by	ARPackage.arPackage, AUTOSAR.arPackage			
Attribute	***Type***	***Mult.***	***Kind***	***Note***
arPackage	ARPackage	*	aggr	This represents a sub package within an ARPackage, thus allowing for an unlimited package hierarchy. **Stereotypes:** atpVariation **Tags:** atp.Splitkey=arPackage, arPackage.shortName, ar Package.variationPoint.shortLabel vh.latestBindingTime=blueprintDerivationTime xml.sequenceOffset=30
element	PackageableElement	*	aggr	Elements that are part of this package **Stereotypes:** atpVariation **Tags:** atp.Splitkey=element, element.shortName, element.variationPoint.shortLabel vh.latestBindingTime=systemDesignTime xml.sequenceOffset=20
referenceBase	ReferenceBase	*	aggr	This denotes the reference bases for the package. This is the basis for all relative references within the package. The base needs to be selected according to the base attribute within the references. **Tags:** atp.Splitkey=referenceBase, referenceBase.shortLabel xml.sequenceOffset=10

Table D.1: ARPackage

Class	**AUTOSAR**			
Note	Root element of an AUTOSAR description, also the root element in corresponding XML documents. **Tags:** xml.globalElement=true			
Base	*ARObject*			
Attribute	***Type***	***Mult.***	***Kind***	***Note***
adminData	AdminData	0..1	aggr	This represents the administrative data of an Autosar file. **Tags:** atp.Splitkey=adminData xml.sequenceOffset=10

▽

△

Class	AUTOSAR			
arPackage	ARPackage	*	aggr	This is the top level package in an AUTOSAR model. **Stereotypes:** atpVariation **Tags:** atp.Splitkey=arPackage, arPackage.shortName, ar Package.variationPoint.shortLabel vh.latestBindingTime=blueprintDerivationTime xml.sequenceOffset=30
fileInfo Comment	FileInfoComment	0..1	aggr	This represents a possibility to provide a structured comment in an AUTOSAR file. **Stereotypes:** atpStructuredComment **Tags:** atp.Splitkey=fileInfoComment xml.roleElement=true xml.sequenceOffset=-10 xml.typeElement=false
introduction	DocumentationBlock	0..1	aggr	This represents an introduction on the Autosar file. It is intended for example to represent disclaimers and legal notes. **Tags:** atp.Splitkey=introduction xml.sequenceOffset=20

Table D.2: AUTOSAR

Class	*AbstractEvent* (abstract)			
Note	This meta-class represents the abstract ability to model an event that can be taken to implement application software or basic software in AUTOSAR.			
Base	*ARObject*, *Identifiable*, *MultilanguageReferrable*, *Referrable*			
Subclasses	*BswEvent*, *RTEEvent*			
Attribute	**Type**	**Mult.**	**Kind**	**Note**
activation Reason Representation	ExecutableEntity ActivationReason	0..1	ref	If the activationReasonRepresentation is referenced from the enclosing AbstractEvent this shall be taken as an indication that the latter contributes to the activating vector of this ExecutableEntity that owns the referenced ExecutableEntityActivationReason. **Tags:** atp.Splitkey=activationReasonRepresentation

Table D.3: AbstractEvent

Class	*AbstractRequiredPortPrototype* (abstract)			
Note	This abstract class provides the ability to become a required PortPrototype.			
Base	*ARObject*, *AtpFeature*, *AtpPrototype*, *Identifiable*, *MultilanguageReferrable*, *PortPrototype*, *Referrable*			
Subclasses	PRPortPrototype, RPortPrototype			
Aggregated by	*AtpClassifier*.atpFeature, *SwComponentType*.port			
Attribute	**Type**	**Mult.**	**Kind**	**Note**
requiredCom Spec	RPortComSpec	*	aggr	Required communication attributes, one for each interface element. **Tags:** atp.Splitkey=requiredComSpec, requiredCom Spec.dataElement, requiredComSpec.getter, required ComSpec.modeGroup, requiredComSpec.operation, requiredComSpec.parameter, requiredComSpec.setter, requiredComSpec.shortLabel, requiredComSpec.variable

Table D.4: AbstractRequiredPortPrototype

Class	***ApplicationDataType*** (abstract)			
Note	`ApplicationDataType` defines a data type from the application point of view. Especially it should be used whenever something "physical" is at stake. An `ApplicationDataType` represents a set of values as seen in the application model, such as measurement units. It does not consider implementation details such as bit-size, endianess, etc. It should be possible to model the application level aspects of a VFB system by using `ApplicationDataType`s only.			
Base	*ARElement*, *ARObject*, *AtpBlueprint*, *AtpClassifier*, *AtpType*, *AutosarDataType*, *CollectableElement*, *Identifiable*, *MultilanguageReferrable*, *PackageableElement*, *Referrable*			
Subclasses	*ApplicationCompositeDataType*, ApplicationPrimitiveDataType			
Aggregated by	ARPackage.element			
Attribute	***Type***	***Mult.***	***Kind***	***Note***
–	–	–	–	–

Table D.5: ApplicationDataType

Class	**ApplicationSwComponentType**			
Note	The `ApplicationSwComponentType` is used to represent the application software. **Tags:** atp.recommendedPackage=SwComponentTypes			
Base	*ARElement*, *ARObject*, *AtomicSwComponentType*, *AtpBlueprint*, *AtpClassifier*, *AtpType*, *Collectable Element*, *Identifiable*, *MultilanguageReferrable*, *PackageableElement*, *Referrable*, *SwComponentType*			
Aggregated by	ARPackage.element			
Attribute	***Type***	***Mult.***	***Kind***	***Note***
–	–	–	–	–

Table D.6: ApplicationSwComponentType

Class	**ArgumentDataPrototype**			
Note	An argument of an operation, carries direction and implementation information.			
Base	*ARObject*, *AtpFeature*, *AtpPrototype*, *AutosarDataPrototype*, *DataPrototype*, *Identifiable*, *Multilanguage Referrable*, *Referrable*			
Aggregated by	*AtpClassifier*.atpFeature, ClientServerOperation.argument			
Attribute	***Type***	***Mult.***	***Kind***	***Note***
direction	ArgumentDirection Enum	0..1	attr	This attribute specifies the direction of the argument.
serverArgument ImplPolicy	ServerArgumentImpl PolicyEnum	0..1	attr	This defines how the argument type of the servers `RunnableEntity` is implemented. If the attribute is not defined this has the same semantics as if the attribute is set to the value `useArgumentType` for primitive arguments and structures.

Table D.7: ArgumentDataPrototype

Class	***AtomicSwComponentType*** (abstract)
Note	An atomic software component is atomic in the sense that it cannot be further decomposed and distributed across multiple ECUs.
Base	*ARElement*, *ARObject*, *AtpBlueprint*, *AtpClassifier*, *AtpType*, *CollectableElement*, *Identifiable*, *MultilanguageReferrable*, *PackageableElement*, *Referrable*, *SwComponentType*
Subclasses	ApplicationSwComponentType, ComplexDeviceDriverSwComponentType, EcuAbstractionSwComponent Type, NvBlockSwComponentType, SensorActuatorSwComponentType, ServiceProxySwComponent Type, ServiceSwComponentType

▽

△

Class	***AtomicSwComponentType*** (abstract)			
Aggregated by	ARPackage.element			
Attribute	***Type***	***Mult.***	***Kind***	***Note***
internalBehavior	SwcInternalBehavior	0..1	aggr	The `SwcInternalBehavior`s owned by an `AtomicSwComponentType` can be located in a different physical file. Therefore the aggregation is <<atp Splitable>>. **Stereotypes:** atpVariation **Tags:** atp.Splitkey=internalBehavior, internalBehavior.shortName, internalBehavior.variationPoint.shortLabel vh.latestBindingTime=preCompileTime
symbolProps	SymbolProps	0..1	aggr	This represents the `SymbolProps` for the `AtomicSwComponentType`. **Tags:** atp.Splitkey=symbolProps, symbolProps.shortName

Table D.8: AtomicSwComponentType

Class	***AtpInstanceRef*** (abstract)			
Note	An M0 instance of a classifier may be represented as a tree rooted at that instance, where under each node come the sub-trees representing the instances which act as features under that node. An instance ref specifies a navigation path from any M0 tree-instance of the base (which is a classifier) to a leaf (which is an instance of the target).			
Base	*ARObject*			
Subclasses	AnyInstanceRef, ApplicationCompositeElementInPortInterfaceInstanceRef, ComponentInCompositionInstanceRef, ComponentInSystemInstanceRef, *DataPrototypeInPortInterfaceInstanceRef*, DataPrototypeInSystemInstanceRef, InnerDataPrototypeGroupInCompositionInstanceRef, InnerPortGroupInCompositionInstanceRef, InnerRunnableEntityGroupInCompositionInstanceRef, InstanceEventInCompositionInstanceRef, ModeDeclarationGroupPrototypeInSystemInstanceRef, *ModeGroupInAtomicSwcInstanceRef*, ModeInBswInstanceRef, ModeInBswModuleDescriptionInstanceRef, ModeInSwcInstanceRef, OperationArgumentInComponentInstanceRef, *OperationInAtomicSwcInstanceRef*, OperationInSystemInstanceRef, PModeInSystemInstanceRef, ParameterDataPrototypeInSystemInstanceRef, ParameterInAtomicSWCTypeInstanceRef, PortGroupInSystemInstanceRef, *PortInCompositionTypeInstanceRef*, RModeInAtomicSwcInstanceRef, RteEventInCompositionInstanceRef, RteEventInEcuInstanceRef, RteEventInSystemInstanceRef, RunnableEntityInCompositionInstanceRef, SwcServiceDependencyInSystemInstanceRef, *TriggerInAtomicSwcInstanceRef*, TriggerInSystemInstanceRef, VariableAccessInEcuInstanceRef, VariableDataPrototypeInCompositionInstanceRef, VariableDataPrototypeInSystemInstanceRef, VariableInAtomicSWCTypeInstanceRef, *VariableInAtomicSwcInstanceRef*, VariableInComponentInstanceRef			
Attribute	***Type***	***Mult.***	***Kind***	***Note***
atpBase	AtpClassifier	0..1	ref	This is the base from which the navigaion path starts. **Stereotypes:** atpAbstract; atpDerived
atpContextElement (ordered)	AtpPrototype	*	ref	This is one particular step in the navigation path. **Stereotypes:** atpAbstract
atpTarget	AtpFeature	0..1	ref	This is the target of the instance ref. In other words it is the terminal of the navigation path. **Stereotypes:** atpAbstract

Table D.9: AtpInstanceRef

Class	***AutosarDataType*** (abstract)			
Note	Abstract base class for user defined AUTOSAR data types for software.			
Base	*ARElement*, *ARObject*, *AtpClassifier*, *AtpType*, *CollectableElement*, *Identifiable*, *Multilanguage Referrable*, *PackageableElement*, *Referrable*			
Subclasses	*AbstractImplementationDataType*, *ApplicationDataType*			
Aggregated by	ARPackage.element			
Attribute	***Type***	***Mult.***	***Kind***	***Note***
swDataDef Props	SwDataDefProps	0..1	aggr	The properties of this AutosarDataType. **Tags:** atp.Splitkey=swDataDefProps

Table D.10: AutosarDataType

Primitive	**Boolean**
Note	A Boolean value denotes a logical condition that is either 'true' or 'false'. It can be one of "0", "1", "true", "false" **Tags:** xml.xsd.customType=BOOLEAN xml.xsd.pattern=0|1|true|false xml.xsd.type=string

Table D.11: Boolean

Class	***BswEvent*** (abstract)			
Note	Base class of various kinds of events which are used to trigger a BswModuleEntity of this BSW module or cluster. The event is local to the BSW module or cluster. The short name of the meta-class instance is intended as an input to configure the required API of the BSW Scheduler.			
Base	*ARObject*, *AbstractEvent*, *Identifiable*, *MultilanguageReferrable*, *Referrable*			
Subclasses	BswInterruptEvent, BswOperationInvokedEvent, *BswScheduleEvent*			
Aggregated by	BswInternalBehavior.event			
Attribute	***Type***	***Mult.***	***Kind***	***Note***
context Limitation	BswDistinguished Partition	*	ref	The existence of this reference indicates that the usage of the event is limited to the context of the referred Bsw DistinguishedPartitions. **Tags:** atp.Splitkey=contextLimitation
disabledInMode	ModeDeclaration	*	iref	The modes, in which this event is disabled. **Tags:** atp.Splitkey=disabledInMode, disabledIn Mode.contextModeDeclarationGroup, disabledIn Mode.targetMode **InstanceRef implemented by:** ModeInBswModule DescriptionInstanceRef
startsOnEvent	BswModuleEntity	0..1	ref	The entity which is started by the event. **Tags:** atp.Splitkey=startsOnEvent

Table D.12: BswEvent

Class	**BswImplementation**
Note	Contains the implementation specific information in addition to the generic specification (BswModule Description and BswBehavior). It is possible to have several different BswImplementations referring to the same BswBehavior. **Tags:** atp.recommendedPackage=BswImplementations This Class is only used by the AUTOSAR Classic Platform.

△

Class	**BswImplementation**			
Base	*ARElement*, *ARObject*, *CollectableElement*, *Identifiable*, *Implementation*, *MultilanguageReferrable*, *PackageableElement*, *Referrable*			
Aggregated by	ARPackage.element			
Attribute	***Type***	***Mult.***	***Kind***	***Note***
arRelease Version	RevisionLabelString	0..1	attr	Version of the AUTOSAR Release on which this implementation is based. The numbering contains three levels (major, minor, revision) which are defined by AUTOSAR.
behavior	BswInternalBehavior	0..1	ref	The behavior of this implementation. This relation is made as an association because • it follows the pattern of the SWCT • since ARElement cannot be split, but we want supply the implementation later, the BswImplementation is not aggregated in BswBehavior **Tags:** atp.Splitkey=behavior
preconfigured Configuration	EcucModule ConfigurationValues	*	ref	Reference to the set of preconfigured (i.e. fixed) configuration values for this BswImplementation. If the BswImplementation represents a cluster of several modules, more than one EcucModuleConfigurationValues element can be referred (at most one per module), otherwise at most one such element can be referred. **Tags:** atp.Splitkey=preconfiguredConfiguration xml.roleWrapperElement=true
recommended Configuration	EcucModule ConfigurationValues	*	ref	Reference to one or more sets of recommended configuration values for this module or module cluster. **Tags:** atp.Splitkey=recommendedConfiguration
vendorApiInfix	Identifier	0..1	attr	In driver modules which can be instantiated several times on a single ECU, SRS_BSW_00347 requires that the names of files, APIs, published parameters and memory allocation keywords are extended by the vendorId and a vendor specific name. This parameter is used to specify the vendor specific name. In total, the implementation specific API name is generated as follows: <Module Name>_<vendorId>_ <vendorApiInfix>_<API name from SWS>. E.g. assuming that the vendorId of the implementer is 123 and the implementer chose a vendorApiInfix of "v11r456" an API name Can_Write defined in the SWS will translate to Can_123_v11r456_Write. This attribute is mandatory for all modules with upper multiplicity > 1. It shall not be used for modules with upper multiplicity =1. See also SWS_BSW_00102.

▽

△

Class	**BswImplementation**			
vendorSpecific ModuleDef	EcucModuleDef	*	ref	Reference to • the vendor specific EcucModuleDef used in this Bsw Implementation if it represents a single module • several EcucModuleDefs used in this Bsw Implementation if it represents a cluster of modules • one or no EcucModuleDefs used in this Bsw Implementation if it represents a library **Tags:** atp.Splitkey=vendorSpecificModuleDef xml.roleWrapperElement=true

Table D.13: BswImplementation

Class	**BswInternalBehavior**			
Note	Specifies the behavior of a BSW module or a BSW cluster w.r.t. the code entities visible by the BSW Scheduler. It is possible to have several different BswInternalBehaviors referring to the same BswModule Description.			
Base	*ARObject*, *AtpClassifier*, *AtpFeature*, *AtpStructureElement*, *Identifiable*, *InternalBehavior*, *Multilanguage Referrable*, *Referrable*			
Aggregated by	*AtpClassifier*.atpFeature, BswModuleDescription.internalBehavior			
Attribute	***Type***	***Mult.***	***Kind***	***Note***
arTypedPer Instance Memory	VariableDataPrototype	*	aggr	Defines an AUTOSAR typed memory-block that needs to be available for each instance of the Basic Software Module. The aggregation of arTypedPerInstanceMemory is subject to variability with the purpose to support variability in the Basic Software Module's implementations. Typically different algorithms in the implementation are requiring different number of memory objects. **Stereotypes:** atpVariation **Tags:** atp.Splitkey=arTypedPerInstanceMemory, arTypedPer InstanceMemory.shortName, arTypedPerInstance Memory.variationPoint.shortLabel vh.latestBindingTime=preCompileTime
bswPerInstance MemoryPolicy	BswPerInstance MemoryPolicy	*	aggr	Policy for a arTypedPerInstanceMemory The policy selects the options of the Schedule Manager API generation. **Stereotypes:** atpVariation **Tags:** atp.Splitkey=bswPerInstanceMemoryPolicy, bswPer InstanceMemoryPolicy.variationPoint.shortLabel vh.latestBindingTime=preCompileTime
clientPolicy	BswClientPolicy	*	aggr	Policy for a requiredClientServerEntry. The policy selects the options of the Schedule Manager API generation. **Stereotypes:** atpVariation **Tags:** atp.Splitkey=clientPolicy, clientPolicy.variationPoint.short Label vh.latestBindingTime=preCompileTime

▽

△

Class	**BswInternalBehavior**			
distinguished Partition	BswDistinguished Partition	*	aggr	Indicates an abstract partition context in which the enclosing BswModuleEntity can be executed. **Stereotypes:** atpVariation **Tags:** atp.Splitkey=distinguishedPartition, distinguished Partition.shortName, distinguishedPartition.variation Point.shortLabel vh.latestBindingTime=preCompileTime xml.sequenceOffset=60
entity	BswModuleEntity	*	aggr	A code entity for which the behavior is described **Stereotypes:** atpVariation **Tags:** atp.Splitkey=entity, entity.shortName, entity.variation Point.shortLabel vh.latestBindingTime=preCompileTime xml.sequenceOffset=5
event	BswEvent	*	aggr	An event required by this module behavior. **Stereotypes:** atpVariation **Tags:** atp.Splitkey=event, event.shortName, event.variation Point.shortLabel vh.latestBindingTime=preCompileTime xml.sequenceOffset=10
exclusiveArea Policy	BswExclusiveArea Policy	*	aggr	Policy for an ExclusiveArea in this BswInternalBehavior. The policy selects the options of the Schedule Manager API generation. **Stereotypes:** atpVariation **Tags:** atp.Splitkey=exclusiveAreaPolicy, exclusiveArea Policy.variationPoint.shortLabel vh.latestBindingTime=preCompileTime
includedData TypeSet	IncludedDataTypeSet	*	aggr	The includedDataTypeSet is used by a basic software module for its implementation. **Tags:** atp.Splitkey=includedDataTypeSet
includedMode Declaration GroupSet	IncludedMode DeclarationGroupSet	*	aggr	This aggregation represents the included Mode DeclarationGroups **Tags:** atp.Splitkey=includedModeDeclarationGroupSet
internal TriggeringPoint	BswInternalTriggering Point	*	aggr	An internal triggering point. **Stereotypes:** atpVariation **Tags:** atp.Splitkey=internalTriggeringPoint, internalTriggering Point.shortName, internalTriggeringPoint.variation Point.shortLabel vh.latestBindingTime=preCompileTime xml.sequenceOffset=2 This Attribute is only used by the AUTOSAR Classic Platform.
internal TriggeringPoint Policy	BswInternalTriggering PointPolicy	*	aggr	Policy for an internalTriggeringPoint in this BswInternal Behavior.. The policy selects the options of the Schedule Manager API generation. **Stereotypes:** atpVariation **Tags:** atp.Splitkey=internalTriggeringPointPolicy, internal TriggeringPointPolicy.variationPoint.shortLabel vh.latestBindingTime=preCompileTime

▽

△

Class	**BswInternalBehavior**			
modeReceiver Policy	BswModeReceiver Policy	*	aggr	Implementation policy for the reception of mode switches. **Stereotypes:** atpVariation **Tags:** atp.Splitkey=modeReceiverPolicy, modeReceiver Policy.variationPoint.shortLabel vh.latestBindingTime=preCompileTime xml.sequenceOffset=25
modeSender Policy	BswModeSenderPolicy	*	aggr	Implementation policy for providing a mode group. **Stereotypes:** atpVariation **Tags:** atp.Splitkey=modeSenderPolicy, modeSender Policy.variationPoint.shortLabel vh.latestBindingTime=preCompileTime xml.sequenceOffset=20
parameterPolicy	BswParameterPolicy	*	aggr	Policy for a perInstanceParameter in this BswInternal Behavior. The policy selects the options of the Schedule Manager API generation. **Stereotypes:** atpVariation **Tags:** atp.Splitkey=parameterPolicy, parameterPolicy.variation Point.shortLabel vh.latestBindingTime=preCompileTime
perInstance Parameter	ParameterData Prototype	*	aggr	Describes a read only memory object containing characteristic value(s) needed by this BswInternal Behavior. The role name perInstanceParameter is chosen in analogy to the similar role in the context of SwcInternal Behavior. In contrast to constantMemory, this object is not allocated locally by the module's code, but by the BSW Scheduler and it is accessed from the BSW module via the BSW Scheduler API. The main use case is the support of software emulation of calibration data. The aggregation is subject to variability with the purpose to support implementation variants. **Stereotypes:** atpVariation **Tags:** atp.Splitkey=perInstanceParameter, perInstance Parameter.shortName, perInstanceParameter.variation Point.shortLabel vh.latestBindingTime=preCompileTime xml.sequenceOffset=45
receptionPolicy	BswDataReception Policy	*	aggr	Data reception policy for inter-partition and/or inter-core communication. **Stereotypes:** atpVariation **Tags:** atp.Splitkey=receptionPolicy, receptionPolicy.variation Point.shortLabel vh.latestBindingTime=preCompileTime xml.sequenceOffset=55
releasedTrigger Policy	BswReleasedTrigger Policy	*	aggr	Policy for a releasedTrigger. The policy selects the options of the Schedule Manager API generation. **Stereotypes:** atpVariation **Tags:** atp.Splitkey=releasedTriggerPolicy, releasedTrigger Policy.variationPoint.shortLabel vh.latestBindingTime=preCompileTime

▽

△

Class	**BswInternalBehavior**			
schedulerName Prefix	BswSchedulerName Prefix	*	aggr	Optional definition of one or more prefixes to be used for the BswScheduler. **Stereotypes:** atpVariation **Tags:** atp.Splitkey=schedulerNamePrefix, schedulerName Prefix.shortName, schedulerNamePrefix.variation Point.shortLabel vh.latestBindingTime=preCompileTime xml.sequenceOffset=50
sendPolicy	BswDataSendPolicy	*	aggr	Policy for a providedData. The policy selects the options of the Schedule Manager API generation. **Stereotypes:** atpVariation **Tags:** atp.Splitkey=sendPolicy, sendPolicy.variationPoint.short Label vh.latestBindingTime=preCompileTime
service Dependency	BswService Dependency	*	aggr	Defines the requirements on AUTOSAR Services for a particular item. The aggregation is subject to variability with the purpose to support the conditional existence of ServiceNeeds. The aggregation is splitable in order to support that ServiceNeeds might be provided in later development steps. **Stereotypes:** atpVariation **Tags:** atp.Splitkey=serviceDependency, service Dependency.ident.shortName, service Dependency.variationPoint.shortLabel vh.latestBindingTime=preCompileTime xml.sequenceOffset=40
triggerDirect Implementation	BswTriggerDirect Implementation	*	aggr	Specifies a trigger to be directly implemented via OS calls. **Stereotypes:** atpVariation **Tags:** atp.Splitkey=triggerDirectImplementation, triggerDirect Implementation.variationPoint.shortLabel vh.latestBindingTime=preCompileTime xml.sequenceOffset=15
variationPoint Proxy	VariationPointProxy	*	aggr	Proxy of a variation points in the C/C++ implementation. **Tags:** atp.Splitkey=variationPointProxy, variationPoint Proxy.shortName

Table D.14: BswInternalBehavior

Class	**BswInterruptEntity**			
Note	BSW module entity, which is designed to be triggered by an interrupt.			
Base	*ARObject*, *BswModuleEntity*, *ExecutableEntity*, *Identifiable*, *MultilanguageReferrable*, *Referrable*			
Aggregated by	BswInternalBehavior.entity			
Attribute	***Type***	***Mult.***	***Kind***	***Note***
interrupt Category	BswInterruptCategory	0..1	attr	Category of the interrupt
interruptSource	String	0..1	attr	Allows a textual documentation of the intended interrupt source.

Table D.15: BswInterruptEntity

Class	**BswModuleDescription**			
Note	Root element for the description of a single BSW module or BSW cluster. In case it describes a BSW module, the short name of this element equals the name of the BSW module. **Tags:** atp.recommendedPackage=BswModuleDescriptions This Class is only used by the AUTOSAR Classic Platform.			
Base	*ARElement*, *ARObject*, *AtpBlueprint*, *AtpClassifier*, *AtpFeature*, *AtpStructureElement*, *CollectableElement*, *Identifiable*, *MultilanguageReferrable*, *PackageableElement*, *Referrable*			
Aggregated by	ARPackage.element, *AtpClassifier*.atpFeature			
Attribute	***Type***	***Mult.***	***Kind***	***Note***
bswModule Dependency	BswModuleDependency	*	aggr	Describes the dependency to another BSW module. **Stereotypes:** atpVariation **Tags:** atp.Splitkey=bswModuleDependency, bswModule Dependency.shortName, bswModule Dependency.variationPoint.shortLabel vh.latestBindingTime=preCompileTime xml.sequenceOffset=20
bswModule Documentation	SwComponent Documentation	0..1	aggr	This adds a documentation to the BSW module. **Stereotypes:** atpVariation **Tags:** atp.Splitkey=bswModuleDocumentation, bswModule Documentation.variationPoint.shortLabel vh.latestBindingTime=preCompileTime xml.sequenceOffset=6
expectedEntry	BswModuleEntry	*	ref	Indicates an entry which is required by this module. Replacement of outgoingCallback / requiredEntry. **Stereotypes:** atpVariation **Tags:** atp.Splitkey=expectedEntry, expectedEntry.bswModule Entry, expectedEntry.variationPoint.shortLabel vh.latestBindingTime=preCompileTime
implemented Entry	BswModuleEntry	*	ref	Specifies an entry provided by this module which can be called by other modules. This includes "main" functions, interrupt routines, and callbacks. Replacement of providedEntry / expectedCallback. **Stereotypes:** atpVariation **Tags:** atp.Splitkey=implementedEntry, implementedEntry.bsw ModuleEntry, implementedEntry.variationPoint.shortLabel vh.latestBindingTime=preCompileTime
internalBehavior	BswInternalBehavior	*	aggr	The various BswInternalBehaviors associated with a Bsw ModuleDescription can be distributed over several physical files. Therefore the aggregation is <<atp Splitable>>. **Tags:** atp.Splitkey=internalBehavior, internalBehavior.short Name xml.sequenceOffset=65
moduleId	PositiveInteger	0..1	attr	Refers to the BSW Module Identifier defined by the AUTOSAR standard. For non-standardized modules, a proprietary identifier can be optionally chosen. **Tags:** xml.sequenceOffset=5

▽

△

Class	**BswModuleDescription**			
providedClient ServerEntry	BswModuleClientServer Entry	*	aggr	Specifies that this module provides a client server entry which can be called from another partition or core.This entry is declared locally to this context and will be connected to the requiredClientServerEntry of another or the same module via the configuration of the BSW Scheduler. **Stereotypes:** atpVariation **Tags:** atp.Splitkey=providedClientServerEntry, providedClient ServerEntry.shortName, providedClientServer Entry.variationPoint.shortLabel vh.latestBindingTime=preCompileTime xml.sequenceOffset=45
providedData	VariableDataPrototype	*	aggr	Specifies a data prototype provided by this module in order to be read from another partition or core.The providedData is declared locally to this context and will be connected to the requiredData of another or the same module via the configuration of the BSW Scheduler. **Stereotypes:** atpVariation **Tags:** atp.Splitkey=providedData, providedData.shortName, providedData.variationPoint.shortLabel vh.latestBindingTime=preCompileTime xml.sequenceOffset=55
providedMode Group	ModeDeclarationGroup Prototype	*	aggr	A set of modes which is owned and provided by this module or cluster. It can be connected to the required ModeGroups of other modules or clusters via the configuration of the BswScheduler. It can also be synchronized with modes provided via ports by an associated ServiceSwComponentType, EcuAbstraction SwComponentType or ComplexDeviceDriverSw ComponentType. **Stereotypes:** atpVariation **Tags:** atp.Splitkey=providedModeGroup, providedMode Group.shortName, providedModeGroup.variation Point.shortLabel vh.latestBindingTime=preCompileTime xml.sequenceOffset=25
releasedTrigger	Trigger	*	aggr	A Trigger released by this module or cluster. It can be connected to the requiredTriggers of other modules or clusters via the configuration of the BswScheduler. It can also be synchronized with Triggers provided via ports by an associated ServiceSwComponentType, Ecu AbstractionSwComponentType or ComplexDeviceDriver SwComponentType. **Stereotypes:** atpVariation **Tags:** atp.Splitkey=releasedTrigger, releasedTrigger.shortName, releasedTrigger.variationPoint.shortLabel vh.latestBindingTime=preCompileTime xml.sequenceOffset=35

▽

△

Class	**BswModuleDescription**			
requiredClient ServerEntry	BswModuleClientServer Entry	*	aggr	Specifies that this module requires a client server entry which can be implemented on another partition or core.This entry is declared locally to this context and will be connected to the providedClientServerEntry of another or the same module via the configuration of the BSW Scheduler. **Stereotypes:** atpVariation **Tags:** atp.Splitkey=requiredClientServerEntry, requiredClient ServerEntry.shortName, requiredClientServer Entry.variationPoint.shortLabel vh.latestBindingTime=preCompileTime xml.sequenceOffset=50
requiredData	VariableDataPrototype	*	aggr	Specifies a data prototype required by this module in oder to be provided from another partition or core.The required Data is declared locally to this context and will be connected to the providedData of another or the same module via the configuration of the BswScheduler. **Stereotypes:** atpVariation **Tags:** atp.Splitkey=requiredData, requiredData.shortName, requiredData.variationPoint.shortLabel vh.latestBindingTime=preCompileTime xml.sequenceOffset=60
requiredMode Group	ModeDeclarationGroup Prototype	*	aggr	Specifies that this module or cluster depends on a certain mode group. The requiredModeGroup is local to this context and will be connected to the providedModeGroup of another module or cluster via the configuration of the BswScheduler. **Stereotypes:** atpVariation **Tags:** atp.Splitkey=requiredModeGroup, requiredMode Group.shortName, requiredModeGroup.variation Point.shortLabel vh.latestBindingTime=preCompileTime xml.sequenceOffset=30
requiredTrigger	Trigger	*	aggr	Specifies that this module or cluster reacts upon an external trigger.This requiredTrigger is declared locally to this context and will be connected to the providedTrigger of another module or cluster via the configuration of the BswScheduler. **Stereotypes:** atpVariation **Tags:** atp.Splitkey=requiredTrigger, requiredTrigger.shortName, requiredTrigger.variationPoint.shortLabel vh.latestBindingTime=preCompileTime xml.sequenceOffset=40

Table D.16: BswModuleDescription

Class	***BswModuleEntity*** (abstract)			
Note	Specifies the smallest code fragment which can be described for a BSW module or cluster within AUTOSAR.			
Base	*ARObject*, *ExecutableEntity*, *Identifiable*, *MultilanguageReferrable*, *Referrable*			
Subclasses	BswCalledEntity, BswInterruptEntity, BswSchedulableEntity			
Aggregated by	BswInternalBehavior.entity			
Attribute	***Type***	***Mult.***	***Kind***	***Note***

▽

△

Class	***BswModuleEntity*** (abstract)			
accessedMode Group	ModeDeclarationGroup Prototype	*	ref	A mode group which is accessed via API call by this entity. It shall be a ModeDeclarationGroupPrototype required by this module or cluster. **Stereotypes:** atpVariation **Tags:** atp.Splitkey=accessedModeGroup, accessedMode Group.modeDeclarationGroupPrototype, accessedMode Group.variationPoint.shortLabel vh.latestBindingTime=preCompileTime
activationPoint	BswInternalTriggering Point	*	ref	Activation point used by the module entity to activate one or more internal triggers. **Stereotypes:** atpVariation **Tags:** atp.Splitkey=activationPoint, activationPoint.bswInternal TriggeringPoint, activationPoint.variationPoint.shortLabel vh.latestBindingTime=preCompileTime This Attribute is only used by the AUTOSAR Classic Platform.
callPoint	BswModuleCallPoint	*	aggr	A call point used in the code of this entity. The variability of this association is especially targeted at debug scenarios: It is possible to have one variant calling into the AUTOSAR debug module and another one which doesn't. **Stereotypes:** atpVariation **Tags:** atp.Splitkey=callPoint, callPoint.shortName, call Point.variationPoint.shortLabel vh.latestBindingTime=preCompileTime
dataReceive Point	BswVariableAccess	*	aggr	The data is received via the BSW Scheduler. **Stereotypes:** atpVariation **Tags:** atp.Splitkey=dataReceivePoint, dataReceivePoint.short Name, dataReceivePoint.variationPoint.shortLabel vh.latestBindingTime=preCompileTime
dataSendPoint	BswVariableAccess	*	aggr	The data is sent via the BSW Scheduler. **Stereotypes:** atpVariation **Tags:** atp.Splitkey=dataSendPoint, dataSendPoint.shortName, dataSendPoint.variationPoint.shortLabel vh.latestBindingTime=preCompileTime
implemented Entry	BswModuleEntry	0..1	ref	The entry which is implemented by this module entity. **Tags:** atp.Splitkey=implementedEntry This Attribute is only used by the AUTOSAR Classic Platform.
issuedTrigger	Trigger	*	ref	A trigger issued by this entity via BSW Scheduler API call. It shall be a BswTrigger released (i.e. owned) by this module or cluster. **Stereotypes:** atpVariation **Tags:** atp.Splitkey=issuedTrigger, issuedTrigger.trigger, issued Trigger.variationPoint.shortLabel vh.latestBindingTime=preCompileTime

▽

△

Class	***BswModuleEntity*** (abstract)			
managedMode Group	ModeDeclarationGroup Prototype	*	ref	A mode group which is managed by this entity. It shall be a ModeDeclarationGroupPrototype provided by this module or cluster. **Stereotypes:** atpVariation **Tags:** atp.Splitkey=managedModeGroup, managedMode Group.modeDeclarationGroupPrototype, managedMode Group.variationPoint.shortLabel vh.latestBindingTime=preCompileTime
schedulerName Prefix	BswSchedulerName Prefix	0..1	ref	A prefix to be used in generated names for the Bsw ModuleScheduler in the context of this BswModuleEntity, for example entry point prototypes, macros for dealing with exclusive areas, header file names. Details are defined in the SWS RTE. The prefix supersedes default rules for the prefix of those names. **Tags:** atp.Splitkey=schedulerNamePrefix

Table D.17: BswModuleEntity

Class	**BswModuleEntry**			
Note	This class represents a single API entry (C-function prototype) into the BSW module or cluster. The name of the C-function is equal to the short name of this element with one exception: In case of multiple instances of a module on the same CPU, special rules for "infixes" apply, see description of class BswImplementation. **Tags:** atp.recommendedPackage=BswModuleEntrys This Class is only used by the AUTOSAR Classic Platform.			
Base	*ARElement*, *ARObject*, *AtpBlueprint*, *CollectableElement*, *Identifiable*, *MultilanguageReferrable*, *PackageableElement*, *Referrable*			
Aggregated by	ARPackage.element			
Attribute	***Type***	***Mult.***	***Kind***	***Note***
argument (ordered)	SwServiceArg	*	aggr	An argument belonging to this BswModuleEntry. **Stereotypes:** atpVariation **Tags:** vh.latestBindingTime=blueprintDerivationTime xml.sequenceOffset=45
bswEntryKind	BswEntryKindEnum	0..1	attr	This describes whether the entry is concrete or abstract. If the attribute is missing the entry is considered as concrete. **Tags:** xml.sequenceOffset=40
callType	BswCallType	0..1	attr	The type of call associated with this service. **Tags:** xml.sequenceOffset=25
execution Context	BswExecutionContext	0..1	attr	Specifies the execution context which is required (in case of entries into this module) or guaranteed (in case of entries called from this module) for this service. **Tags:** xml.sequenceOffset=30
function Prototype Emitter	NameToken	0..1	attr	This attribute is used to control the generation of function prototypes. If set to "RTE", the RTE generates the function prototypes in the Module Interlink Header File.

▽

△

Class	**BswModuleEntry**			
isReentrant	Boolean	0..1	attr	Reentrancy from the viewpoint of function callers: • true: Enables the service to be invoked again, before the service has finished. • false: It is prohibited to invoke the service again before is has finished. **Tags:** xml.sequenceOffset=15
isSynchronous	Boolean	0..1	attr	Synchronicity from the viewpoint of function callers: • true: This calls a synchronous service, i.e. the service is completed when the call returns. • false: The service (on semantical level) may not be complete when the call returns. **Tags:** xml.sequenceOffset=20
returnType	SwServiceArg	0..1	aggr	The return type belonging to this bswModuleEntry. **Tags:** atp.Splitkey=returnType, returnType.shortName xml.sequenceOffset=40
role	Identifier	0..1	attr	Specifies the role of the entry in the given context. It shall be equal to the standardized name of the service call, especially in cases where no ServiceIdentifier is specified, e.g. for callbacks. Note that the ShortName is not always sufficient because it maybe vendor specific (e.g. for callbacks which can have more than one instance). **Tags:** xml.sequenceOffset=10
serviceId	PositiveInteger	0..1	attr	Refers to the service identifier of the Standardized Interfaces of AUTOSAR basic software. For non-standardized interfaces, it can optionally be used for proprietary identification. **Tags:** xml.sequenceOffset=5
swServiceImpl Policy	SwServiceImplPolicy Enum	0..1	attr	Denotes the implementation policy as a standard function call, inline function or macro. This has to be specified on interface level because it determines the signature of the call. **Tags:** xml.sequenceOffset=35

Table D.18: BswModuleEntry

Class	**BswTimingEvent**			
Note	A recurring BswEvent driven by a time period.			
Base	*ARObject*, *AbstractEvent*, *BswEvent*, *BswScheduleEvent*, *Identifiable*, *MultilanguageReferrable*, *Referrable*			
Aggregated by	BswInternalBehavior.event			
Attribute	***Type***	***Mult.***	***Kind***	***Note***
period	TimeValue	0..1	attr	Requirement for the time period (in seconds) by which this event is triggered.

Table D.19: BswTimingEvent

Class	**ClientServerOperation**
Note	An operation declared within the scope of a client/server interface.
Base	*ARObject*, *AtpClassifier*, *AtpFeature*, *AtpStructureElement*, *Identifiable*, *MultilanguageReferrable*, *Referrable*

▽

△

Class	ClientServerOperation			
Aggregated by	ApplicationInterface.command, *AtpClassifier*.atpFeature, ClientServerInterface.operation, DiagnosticDataElementInterface.read, DiagnosticDataIdentifierInterface.read, DiagnosticDataIdentifierInterface.write, DiagnosticExtendedDataRecordInterface.provide, DiagnosticRoutineInterface.requestResult, DiagnosticRoutineInterface.start, DiagnosticRoutineInterface.stop, ServiceInterface.method			
Attribute	**Type**	**Mult.**	**Kind**	**Note**
argument (ordered)	ArgumentDataPrototype	*	aggr	An argument of this `ClientServerOperation`. **Stereotypes:** atpVariation **Tags:** vh.latestBindingTime=blueprintDerivationTime
diagArgIntegrity	Boolean	0..1	attr	This attribute shall only be used in the implementation of diagnostic routines to support the case where input and output arguments are allocated in a shared buffer and might unintentionally overwrite input arguments by tentative write operations to output arguments. This situation can happen during sliced execution or while output parameters are arrays (call by reference). The value true means that the `ClientServerOperation` is aware of the usage of a shared buffer and takes precautions to avoid unintentional overwrite of input arguments. If the attribute does not exist or is set to false the `ClientServerOperation` does not have to consider the usage of a shared buffer. This Attribute is only used by the AUTOSAR Classic Platform.
possibleError	ApplicationError	*	ref	Possible errors that may by raised by the referring operation. **Tags:** atp.Splitkey=possibleError This Attribute is only used by the AUTOSAR Classic Platform.

Table D.20: ClientServerOperation

Class	ComplexDeviceDriverSwComponentType			
Note	The ComplexDeviceDriverSwComponentType is a special AtomicSwComponentType that has direct access to hardware on an ECU and which is therefore linked to a specific ECU or specific hardware. The ComplexDeviceDriverSwComponentType introduces the possibility to link from the software representation to its hardware description provided by the ECU Resource Template. **Tags:** atp.recommendedPackage=SwComponentTypes			
Base	*ARElement*, *ARObject*, *AtomicSwComponentType*, *AtpBlueprint*, *AtpClassifier*, *AtpType*, *CollectableElement*, *Identifiable*, *MultilanguageReferrable*, *PackageableElement*, *Referrable*, *SwComponentType*			
Aggregated by	ARPackage.element			
Attribute	**Type**	**Mult.**	**Kind**	**Note**
hardware Element	HwDescriptionEntity	*	ref	Reference from the ComplexDeviceDriverSwComponent Type to the description of the used HwElements. **Tags:** atp.Splitkey=hardwareElement

Table D.21: ComplexDeviceDriverSwComponentType

Class	ComponentInCompositionInstanceRef
Note	The ComponentInCompositionInstanceRef points to a concrete SwComponentPrototype within a CompositionSwComponentType.
Base	*ARObject*, *AtpInstanceRef*

▽

△

Class	ComponentInCompositionInstanceRef			
Aggregated by	DiagnosticJ1939SwMapping.swComponentPrototype, EOCEventRef.component, EOCExecutableEntity Ref.component, ExecutionTimeConstraint.component, *TDEventSwc*.component			
Attribute	**Type**	**Mult.**	**Kind**	**Note**
base	CompositionSw ComponentType	0..1	ref	**Stereotypes:** atpDerived **Tags:** xml.sequenceOffset=10
context Component (ordered)	SwComponent Prototype	*	ref	The context for the scope of this timing event. **Tags:** xml.sequenceOffset=20
target Component	SwComponent Prototype	0..1	ref	**Tags:** xml.sequenceOffset=30

Table D.22: ComponentInCompositionInstanceRef

Class	CompositionSwComponentType			
Note	A `CompositionSwComponentType` aggregates `SwComponentPrototype`s (that in turn are typed by `SwComponentType`)s as well as `SwConnector`s for primarily connecting `SwComponentPrototype`s among each others and towards the surface of the `CompositionSwComponentType`. By this means, a hierarchical structures of software-components can be created. **Tags:** atp.recommendedPackage=SwComponentTypes			
Base	*ARElement*, *ARObject*, *AtpBlueprint*, *AtpClassifier*, *AtpType*, *CollectableElement*, *Identifiable*, *MultilanguageReferrable*, *PackageableElement*, *Referrable*, *SwComponentType*			
Aggregated by	ARPackage.element			
Attribute	**Type**	**Mult.**	**Kind**	**Note**
component	SwComponent Prototype	*	aggr	The instantiated components that are part of this composition. The aggregation of `SwComponentPrototype` is subject to variability with the purpose to support the conditional existence of a `SwComponentPrototype`. Please be aware: if the conditional existence of `SwComponentPrototype`s is resolved post-build, the deselected `SwComponentPrototype`s are still contained in the ECUs build but the instances are inactive in that they are not scheduled by the RTE. The use case for having 0 components owned by the `CompositionSwComponentType` could be to deliver an empty `CompositionSwComponentType` to e.g. a supplier for filling the internal structure. **Stereotypes:** atpVariation **Tags:** atp.Splitkey=component, component.shortName, component.variationPoint.shortLabel vh.latestBindingTime=postBuild
connector	SwConnector	*	aggr	`SwConnector`s have the principal ability to establish a connection among `PortPrototype`s. They can have many roles in the context of a `CompositionSwComponentType`. Details are refined by subclasses. The aggregation of `SwConnector`s is subject to variability with the purpose to support variant data flow. **Stereotypes:** atpVariation **Tags:** atp.Splitkey=connector, connector.shortName, connector.variationPoint.shortLabel vh.latestBindingTime=postBuild

▽

△

Class	**CompositionSwComponentType**			
constantValue Mapping	ConstantSpecification MappingSet	*	ref	Reference to the `ConstantSpecificationMapping` to be applied for initValues of `PPortComSpec`s and `RPortComSpec`. **Tags:** atp.Splitkey=constantValueMapping
dataType Mapping	DataTypeMappingSet	*	ref	Reference to the `DataTypeMappingSet` to be applied for the used `ApplicationDataType`s in `PortInterface`s. Background: when developing subsystems it may happen that `ApplicationDataType`s are used on the surface of `CompositionSwComponentType`s. In this case it would be reasonable to be able to also provide the intended mapping to the `ImplementationDataType`s. However, this mapping shall be informal and not technically binding for the implementors mainly because the RTE generator is not concerned about the `CompositionSwComponentType`s. Rationale: if the mapping of `ApplicationDataType`s on the delegated and inner `PortPrototype` matches then the mapping to `ImplementationDataType`s is not impacting compatibility. **Tags:** atp.Splitkey=dataTypeMapping
instantiation RTEEventProps	InstantiationRTEEvent Props	*	aggr	This allows to define instantiation specific properties for RTE Events, in particular for instance specific scheduling. **Stereotypes:** atpVariation **Tags:** atp.Splitkey=instantiationRTEEventProps, instantiation RTEEventProps.shortLabel, instantiationRTEEvent Props.variationPoint.shortLabel vh.latestBindingTime=codeGenerationTime This Attribute is only used by the AUTOSAR Classic Platform.
physical Dimension Mapping	PhysicalDimension MappingSet	0..1	ref	This reference identifies the `PhysicalDimensionMappingSet` that is applicable in the context of the enclosing `CompositionSwComponentType`. The `PhysicalDimensionMapping`s contained in the `PhysicalDimensionMappingSet` shall be taken into account for the assessment of the compatibility of `PhysicalDimension`s in the context of creation of a `PortInterfaceMapping` in the scope of the `CompositionSwComponentType`. **Tags:** atp.Splitkey=physicalDimensionMapping

Table D.23: CompositionSwComponentType

Class	**CpSoftwareCluster**
Note	This meta class provides the ability to define a CP Software Cluster. Each CP Software Cluster can be integrated and build individually. It defines the sub-set of hierarchical tree(s) of Software Components belonging to this CP Software Cluster. Resources required or provided by this CP Software Cluster are given in the according mappings. **Tags:** atp.recommendedPackage=CpSoftwareClusters This Class is only used by the AUTOSAR Classic Platform.
Base	*ARElement*, *ARObject*, *CollectableElement*, *Identifiable*, *MultilanguageReferrable*, *Packageable Element*, *Referrable*
Aggregated by	ARPackage.element

▽

△

Class	CpSoftwareCluster			
Attribute	**Type**	**Mult.**	**Kind**	**Note**
softwareCluster Id	PositiveInteger	0..1	attr	This attribute represents the value of the id of the corresponding CP software cluster.
swComponent Assignment	SwComponent PrototypeAssignment	*	aggr	This is the collection of SwComponentPrototype Assignments **Stereotypes:** atpVariation **Tags:** atp.Splitkey=swComponentAssignment, swComponent Assignment.variationPoint.shortLabel vh.latestBindingTime=postBuild
swComposition	CompositionSw ComponentType	*	ref	Software Components in the context of a CompositionSw ComponentType belonging to this CP Software Cluster. This reference can be used to describe the belonging SWCs when the CP Software Cluster is described out of the context of a System, e.g. reusable CP Software Cluster. **Stereotypes:** atpVariation **Tags:** atp.Splitkey=swComposition, swComposition.composition SwComponentType, swComposition.variationPoint.short Label vh.latestBindingTime=systemDesignTime

Table D.24: CpSoftwareCluster

Class	*DataPrototype* (abstract)			
Note	Base class for prototypical roles of any data type.			
Base	*ARObject*, *AtpFeature*, *AtpPrototype*, *Identifiable*, *MultilanguageReferrable*, *Referrable*			
Subclasses	*ApplicationCompositeElementDataPrototype*, *AutosarDataPrototype*			
Aggregated by	*AtpClassifier*.atpFeature			
Attribute	**Type**	**Mult.**	**Kind**	**Note**
swDataDef Props	SwDataDefProps	0..1	aggr	This property allows to specify data definition properties which apply on data prototype level. **Tags:** atp.Splitkey=swDataDefProps

Table D.25: DataPrototype

Class	EcuAbstractionSwComponentType			
Note	The ECUAbstraction is a special AtomicSwComponentType that resides between a software-component that wants to access ECU periphery and the Microcontroller Abstraction. The EcuAbstractionSw ComponentType introduces the possibility to link from the software representation to its hardware description provided by the ECU Resource Template. **Tags:** atp.recommendedPackage=SwComponentTypes			
Base	*ARElement*, *ARObject*, *AtomicSwComponentType*, *AtpBlueprint*, *AtpClassifier*, *AtpType*, *Collectable Element*, *Identifiable*, *MultilanguageReferrable*, *PackageableElement*, *Referrable*, *SwComponentType*			
Aggregated by	ARPackage.element			
Attribute	**Type**	**Mult.**	**Kind**	**Note**
hardware Element	HwDescriptionEntity	*	ref	Reference from the EcuAbstractionComponentType to the description of the used HwElements. **Tags:** atp.Splitkey=hardwareElement

Table D.26: EcuAbstractionSwComponentType

Class	**EcucValueCollection**			
Note	This represents the anchor point of the ECU configuration description. **Tags:** atp.recommendedPackage=EcucValueCollections This Class is only used by the AUTOSAR Classic Platform.			
Base	*ARElement*, *ARObject*, *CollectableElement*, *Identifiable*, *MultilanguageReferrable*, *Packageable Element*, *Referrable*			
Aggregated by	ARPackage.element			
Attribute	***Type***	***Mult.***	***Kind***	***Note***
ecucValue	EcucModule ConfigurationValues	*	ref	References to the configuration of individual software modules that are present on this ECU. **Stereotypes:** atpVariation **Tags:** atp.Splitkey=ecucValue, ecucValue.ecucModule ConfigurationValues, ecucValue.variationPoint.shortLabel vh.latestBindingTime=preCompileTime
ecuExtract	System	0..1	ref	Represents the extract of the System Configuration that is relevant for the ECU configured with that ECU Configuration Description. **Tags:** atp.Splitkey=ecuExtract

Table D.27: EcucValueCollection

Class	***ExecutableEntity*** (abstract)			
Note	Abstraction of executable code.			
Base	*ARObject*, *Identifiable*, *MultilanguageReferrable*, *Referrable*			
Subclasses	*BswModuleEntity*, RunnableEntity			
Attribute	***Type***	***Mult.***	***Kind***	***Note***
activation Reason	ExecutableEntity ActivationReason	*	aggr	If the `ExecutableEntity` provides at least one `activationReason` element the RTE resp. BSW Scheduler shall provide means to read the activation vector of this executable entity execution. If no `activationReason` element is provided the feature of being able to determine the activating RTEEvent is disabled for this `ExecutableEntity`. **Tags:** atp.Splitkey=activationReason, activation Reason.shortName
canEnter	ExclusiveArea	*	ref	This means that the executable entity can enter/leave the referenced exclusive area through explicit API calls. **Stereotypes:** atpVariation **Tags:** atp.Splitkey=canEnter, canEnter.exclusiveArea, can Enter.variationPoint.shortLabel vh.latestBindingTime=preCompileTime
exclusiveArea NestingOrder	ExclusiveAreaNesting Order	*	ref	This represents the set of ExclusiveAreaNestingOrders recognized by this ExecutableEntity. **Tags:** atp.Splitkey=exclusiveAreaNestingOrder
minimumStart Interval	TimeValue	0..1	attr	Specifies the time in seconds by which two consecutive starts of an ExecutableEntity are guaranteed to be separated.

▽

△

Class	***ExecutableEntity*** (abstract)			
reentrancyLevel	ReentrancyLevelEnum	0..1	attr	The reentrancy level of this ExecutableEntity. See the documentation of the enumeration type ReentrancyLevel Enum for details. Please note that nonReentrant interfaces can have also reentrant or multicoreReentrant implementations, and reentrant interfaces can also have multicoreReentrant implementations.
runsInside	ExclusiveArea	*	ref	The executable entity runs completely inside the referenced exclusive area. **Stereotypes:** atpVariation **Tags:** atp.Splitkey=runsInside, runsInside.exclusiveArea, runsInside.variationPoint.shortLabel vh.latestBindingTime=preCompileTime
swAddrMethod	SwAddrMethod	0..1	ref	Addressing method related to this code entity. Via an association to the same SwAddrMethod, it can be specified that several code entities (even of different modules or components) shall be located in the same memory without already specifying the memory section itself. **Tags:** atp.Splitkey=swAddrMethod

Table D.28: ExecutableEntity

Primitive	**Float**
Note	An instance of Float is an element from the set of real numbers. **Tags:** xml.xsd.customType=FLOAT xml.xsd.type=double

Table D.29: Float

Class	«atpMixedString» ***FormulaExpression*** (abstract)			
Note	This class represents the syntax of the formula language. The class is modeled as an abstract class in order to be specialized into particular use cases. For each use case the referable objects might be specified in the specialization.			
Base	*ARObject*			
Subclasses	CompuGenericMath, EcucConditionFormula, EcucParameterDerivationFormula, *FMFormulaByFeatures AndAttributes*, *SwSystemconstDependentFormula*, TDEventOccurrenceExpressionFormula, Timing ConditionFormula			
Attribute	***Type***	***Mult.***	***Kind***	***Note***
atpReference	Referrable	*	ref	The referable object shall yield a numerical / boolean value. **Stereotypes:** atpAbstract
atpString Reference	Referrable	*	ref	The referable object shall yield a string value. **Stereotypes:** atpAbstract

Table D.30: FormulaExpression

Class	***Frame*** (abstract)			
Note	Data frame which is sent over a communication medium. This element describes the pure Layout of a frame sent on a channel.			
Base	*ARObject*, *CollectableElement*, *FibexElement*, *Identifiable*, *MultilanguageReferrable*, *Packageable Element*, *Referrable*			
Subclasses	*AbstractEthernetFrame*, CanFrame, FlexrayFrame, *LinFrame*			
Aggregated by	ARPackage.element			
Attribute	**Type**	**Mult.**	**Kind**	**Note**
frameLength	Integer	0..1	attr	The used length (in bytes) of the referencing frame. Should not be confused with a static byte length reserved for each frame by some platforms (e.g. FlexRay). The frameLength of zero bytes is allowed. Please consider also TPS_SYST_02255.
pduToFrame Mapping	PduToFrameMapping	*	aggr	A frames layout as a sequence of Pdus. atpVariation: The content of a frame can be variable. **Stereotypes:** atpVariation **Tags:** atp.Splitkey=pduToFrameMapping, pduToFrame Mapping.shortName, pduToFrameMapping.variation Point.shortLabel vh.latestBindingTime=postBuild

Table D.31: Frame

Class	***FrameTriggering*** (abstract)			
Note	The FrameTriggering describes the instance of a frame sent on a channel and defines the manner of triggering (timing information) and identification of a frame on the channel, on which it is sent. For the same frame, if FrameTriggerings exist on more than one channel of the same cluster the fan-out/ in is handled by the Bus interface.			
Base	*ARObject*, *Identifiable*, *MultilanguageReferrable*, *Referrable*			
Subclasses	CanFrameTriggering, EthernetFrameTriggering, FlexrayFrameTriggering, LinFrameTriggering			
Aggregated by	*PhysicalChannel*.frameTriggering			
Attribute	**Type**	**Mult.**	**Kind**	**Note**
frame	Frame	0..1	ref	One frame can be triggered several times, e.g. on different channels. If a frame has no frame triggering, it won't be sent at all. A frame triggering has assigned exactly one frame, which it triggers. **Tags:** atp.Splitkey=frame
framePort	FramePort	*	ref	References to the FramePort on every ECU of the system which sends and/or receives the frame. References for both the sender and the receiver side shall be included when the system is completely defined. **Tags:** atp.Splitkey=framePort
pduTriggering	PduTriggering	*	ref	This reference provides the relationship to the Pdu Triggerings that are implemented by the FrameTriggering. The reference is optional since no PduTriggering can be defined for NmPdus and XCP Pdus. **Stereotypes:** atpVariation **Tags:** atp.Splitkey=pduTriggering, pduTriggering.pduTriggering, pduTriggering.variationPoint.shortLabel vh.latestBindingTime=postBuild

Table D.32: FrameTriggering

Class	***IPdu*** (abstract)			
Note	The IPdu (Interaction Layer Protocol Data Unit) element is used to sum up all Pdus that are routed by the PduR.			
Base	*ARElement*, *ARObject*, *CollectableElement*, *FibexElement*, *Identifiable*, *MultilanguageReferrable*, *PackageableElement*, *Pdu*, *Referrable*, *UploadableDesignElement*, *UploadablePackageElement*			
Subclasses	ContainerIPdu, DcmIPdu, GeneralPurposeIPdu, ISignalIPdu, J1939DcmIPdu, J1939ProtectedIPdu, MultiplexedIPdu, NPdu, SecuredIPdu, UserDefinedIPdu			
Aggregated by	ARPackage.element			
Attribute	***Type***	***Mult.***	***Kind***	***Note***
–	–	–	–	–

Table D.33: IPdu

Class	**ISignal**			
Note	Signal of the Interaction Layer. The RTE supports a "signal fan-out" where the same System Signal is sent in different SignalIPdus to multiple receivers. To support the RTE "signal fan-out" each SignalIPdu contains ISignals. If the same System Signal is to be mapped into several SignalIPdus there is one ISignal needed for each ISignalToIPduMapping. ISignals describe the Interface between the Precompile configured RTE and the potentially Postbuild configured Com Stack (see ECUC Parameter Mapping). In case of the SystemSignalGroup an ISignal shall be created for each SystemSignal contained in the SystemSignalGroup. **Tags:** atp.recommendedPackage=ISignals			
Base	*ARElement*, *ARObject*, *CollectableElement*, *FibexElement*, *Identifiable*, *MultilanguageReferrable*, *PackageableElement*, *Referrable*, *UploadableDesignElement*, *UploadablePackageElement*			
Aggregated by	ARPackage.element			
Attribute	***Type***	***Mult.***	***Kind***	***Note***
data Transformation	DataTransformation	0..1	ref	Optional reference to a DataTransformation which represents the transformer chain that is used to transform the data that shall be placed inside this ISignal. **Stereotypes:** atpVariation **Tags:** atp.Splitkey=dataTransformation, data Transformation.dataTransformation, data Transformation.variationPoint.shortLabel vh.latestBindingTime=codeGenerationTime
dataTypePolicy	DataTypePolicyEnum	0..1	attr	With the aggregation of SwDataDefProps an ISignal specifies how it is represented on the network. This representation follows a particular policy. Note that this causes some redundancy which is intended and can be used to support flexible development methodology as well as subsequent integrity checks. If the policy "networkRepresentationFromComSpec" is chosen the network representation from the ComSpec that is aggregated by the PortPrototype shall be used. If the "override" policy is chosen the requirements specified in the PortInterface and in the ComSpec are not fulfilled by the networkRepresentationProps. In case the System Description doesn't use a complete Software Component Description (VFB View) the "legacy" policy can be chosen.

▽

△

Class	**ISignal**			
initValue	ValueSpecification	0..1	aggr	Optional definition of a ISignal's initValue in case the System Description doesn't use a complete Software Component Description (VFB View). This supports the inclusion of legacy system signals. This value can be used to configure the Signal's "Init Value". If a full DataMapping exist for the SystemSignal this information may be available from a configured Sender ComSpec and ReceiverComSpec. In this case the initvalues in SenderComSpec and/or ReceiverComSpec override this optional value specification. Further restrictions apply from the RTE specification. **Tags:** atp.Splitkey=initValue
iSignalProps	ISignalProps	0..1	aggr	Additional optional ISignal properties that may be stored in different files. **Tags:** atp.Splitkey=iSignalProps
iSignalType	ISignalTypeEnum	0..1	attr	This attribute defines whether this iSignal is an array that results in a UINT8_N / UINT8_DYN ComSignalType in the COM configuration or a primitive type.
length	UnlimitedInteger	0..1	attr	Size of the signal in bits. The size needs to be derived from the mapped VariableDataPrototype according to the mapping of primitive DataTypes to BaseTypes as used in the RTE. Indicates maximum size for dynamic length signals. The ISignal length of zero bits is allowed.
network Representation Props	SwDataDefProps	0..1	aggr	Specification of the actual network representation. The usage of SwDataDefProps for this purpose is restricted to the attributes compuMethod and baseType. The optional baseType attributes "memAllignment" and "byteOrder" shall not be used. The attribute "dataTypePolicy" in the SystemTemplate element defines whether this network representation shall be ignored and the information shall be taken over from the network representation of the ComSpec. If "override" is chosen by the system integrator the network representation can violate against the requirements defined in the PortInterface and in the network representation of the ComSpec. In case that the System Description doesn't use a complete Software Component Description (VFB View) this element is used to configure "ComSignalDataInvalid Value" and the Data Semantics. **Tags:** atp.Splitkey=networkRepresentationProps
systemSignal	SystemSignal	0..1	ref	Reference to the System Signal that is supposed to be transmitted in the ISignal. **Tags:** atp.Splitkey=systemSignal
timeout Substitution Value	ValueSpecification	0..1	aggr	Defines and enables the ComTimeoutSubstituition for this ISignal. **Tags:** atp.Splitkey=timeoutSubstitutionValue

▽

△

Class	**ISignal**			
transformation ISignalProps	TransformationISignal Props	*	aggr	A transformer chain consists of an ordered list of transformers. The ISignal specific configuration properties for each transformer are defined in the TransformationISignalProps class. The transformer configuration properties that are common for all ISignals are described in the TransformationTechnology class. **Tags:** atp.Splitkey=transformationISignalProps

Table D.34: ISignal

Class	**ISignalTriggering**			
Note	A ISignalTriggering allows an assignment of ISignals to physical channels.			
Base	*ARObject*, *Identifiable*, *MultilanguageReferrable*, *Referrable*			
Aggregated by	*PhysicalChannel*.iSignalTriggering			
Attribute	***Type***	***Mult.***	***Kind***	***Note***
iSignal	ISignal	0..1	ref	This reference shall be used if an ISignal is transported on the PhysicalChannel. This reference forms an XOR relationship with the ISignalTriggering-ISignalGroup reference. **Tags:** atp.Splitkey=iSignal
iSignalGroup	ISignalGroup	0..1	ref	This reference shall be used if an ISignalGroup is transported on the PhysicalChannel. This reference forms an XOR relationship with the ISignal Triggering-ISignal reference. **Tags:** atp.Splitkey=iSignalGroup
iSignalPort	ISignalPort	*	ref	References to the ISignalPort on every ECU of the system which sends and/or receives the ISignal. References for both the sender and the receiver side shall be included when the system is completely defined. **Tags:** atp.Splitkey=iSignalPort

Table D.35: ISignalTriggering

Class	***Identifiable*** (abstract)
Note	Instances of this class can be referred to by their identifier (within the namespace borders). In addition to this, Identifiables are objects which contribute significantly to the overall structure of an AUTOSAR description. In particular, Identifiables might contain Identifiables.
Base	*ARObject*, *MultilanguageReferrable*, *Referrable*

▽

△

Class	**Identifiable** (abstract)			
Subclasses	ARPackage, *AbstractDoIpLogicAddressProps*, *AbstractEvent*, *AbstractImplementationDataTypeElement*, *AbstractSecurityEventFilter*, *AbstractSecurityIdsmInstanceFilter*, *AbstractServiceInstance*, AppOsTask ProxyToEcuTaskProxyMapping, ApplicationEndpoint, ApplicationError, ApplicationPartitionToEcuPartition Mapping, AppliedStandard, AsynchronousServerCallResultPoint, *AtpBlueprint*, *AtpClassifier*, *Atp Feature*, AutosarOperationArgumentInstance, AutosarVariableInstance, *BinaryManifestAddressable Object*, BinaryManifestItemDefinition, *BinaryManifestResource*, BinaryManifestResourceDefinition, Block State, BswInternalTriggeringPoint, BswModuleDependency, *BuildActionEntity*, BuildActionEnvironment, CanSecSecureChannel, CanTpAddress, CanTpChannel, CanTpNode, Chapter, ClientIdDefinition, Client ServerOperation, Code, *CollectableElement*, ComManagementMapping, *CommConnectorPort*, *CommunicationConnector*, *CommunicationController*, Compiler, ConsistencyNeeds, ConsumedEvent Group, *CouplingElementAbstractDetails*, CouplingPort, *CouplingPortAbstractShaper*, *CouplingPort StructuralElement*, *CpSoftwareClusterResource*, CpSoftwareClusterResourceToApplicationPartition Mapping, CpSoftwareClusterToApplicationPartitionMapping, CpSoftwareClusterToEcuInstanceMapping, CpSoftwareClusterToResourceMapping, *CryptoServiceMapping*, CyclicHandlingComDataToOsTask ProxyMapping, DataPrototypeGroup, DataPrototypeTransformationPropsIdent, DataTransformation, *Dds AbstractServiceInstanceElementCp*, DdsCpDomain, DdsCpPartition, DdsCpQosProfile, DdsCpTopic, DependencyOnArtifact, *DiagEventDebounceAlgorithm*, DiagnosticAuthTransmitCertificateEvaluation, DiagnosticConnectedIndicator, DiagnosticDataElement, DiagnosticDebounceAlgorithmProps, Diagnostic ExtendedDataRecordElement, DiagnosticFunctionInhibitSource, DiagnosticParameterElement, *DiagnosticRoutineSubfunction*, DltApplication, DltArgument, DltArgumentProps, DltLogChannel, Dlt Message, DoIpInterface, DoIpLogicAddress, DoIpRoutingActivation, ECUMapping, *EOCExecutableEntity RefAbstract*, EcuPartition, EcuPartitionToCoreMapping, EcucContainerValue, *EcucDefinitionElement*, EcucDestinationUriDef, EcucEnumerationLiteralDef, EcucQuery, EcucValidationCondition, Ethernet WakeupSleepOnDatalineConfig, EventHandler, ExclusiveArea, *ExecutableEntity*, *ExecutionTime*, FMAttributeDef, FMFeatureMapAssertion, FMFeatureMapCondition, FMFeatureMapElement, FMFeature Relation, FMFeatureRestriction, FMFeatureSelection, FlatInstanceDescriptor, FlexrayTpConnection Control, FlexrayTpNode, FlexrayTpPduPool, *FrameTriggering*, GlobalTimeGateway, *GlobalTimeMaster*, *GlobalTimeSlave*, *HeapUsage*, HwAttributeDef, HwAttributeLiteralDef, HwPin, HwPinGroup, *IEEE1722 TpAcfBus*, *IEEE1722TpAcfBusPart*, IPSecRule, IPv6ExtHeaderFilterList, ISignalToIPduMapping, ISignal Triggering, *IdentCaption*, ImpositionTime, InternalTriggeringPoint, J1939Node, J1939SharedAddress Cluster, J1939TpNode, Keyword, LifeCycleState, LinScheduleTable, LinTpNode, Linker, MacAddress VlanMembership, MacMulticastGroup, MacSecKayParticipant, McDataInstance, MemorySection, Mode Declaration, ModeDeclarationMapping, ModeSwitchPoint, ModeSwitchSenderComSpecProps, Network Endpoint, *NmCluster*, NmEcu, *NmNode*, NvBlockDescriptor, *PackageableElement*, ParameterAccess, PduActivationRoutingGroup, PduToFrameMapping, PduTriggering, PerInstanceMemory, *Physical Channel*, PortElementToCommunicationResourceMapping, PortGroup, *PortInterfaceMapping*, Queued ReceiverComSpecProps, ResourceConsumption, RootSwCompositionPrototype, RptComponent, Rpt Container, RptExecutableEntity, RptExecutableEntityEvent, RptExecutionContext, RptProfile, RptService Point, RteEventInCompositionSeparation, RteEventInCompositionToOsTaskProxyMapping, RteEventIn SystemSeparation, RteEventInSystemToOsTaskProxyMapping, RunnableEntityGroup, *SdgAttribute*, Sdg Class, SecOcJobRequirement, SecureCommunicationAuthenticationProps, SecureCommunication FreshnessProps, SecurityEventContextDataElement, SecurityEventContextProps, *ServerCallPoint*, ServerComSpecProps, *ServiceNeeds*, SignalServiceTranslationElementProps, SignalServiceTranslation EventProps, SignalServiceTranslationProps, SocketAddress, SomeipTpChannel, *StackUsage*, Static SocketConnection, StructuredReq, SwGenericAxisParamType, SwServiceArg, SwcServiceDependency, SwcToApplicationPartitionMapping, SwcToEcuMapping, SwcToImplMapping, SwitchAsynchronousTraffic ShaperGroupEntry, SwitchAtsInstanceEntry, SwitchFlowMeteringEntry, SwitchStreamFilterActionDest PortModification, SwitchStreamFilterEntry, SwitchStreamFilterRule, SwitchStreamGateEntry, Switch StreamIdentification, SystemMapping, SystemSignalGroupToCommunicationResourceMapping, System SignalToCommunicationResourceMapping, TDCpSoftwareClusterMapping, TDCpSoftwareCluster ResourceMapping, TcpOptionFilterList, *TimingClock*, TimingClockSyncAccuracy, TimingCondition, *TimingConstraint*, *TimingDescription*, TimingExtensionResource, TimingModeInstance, TlsCryptoCipher Suite, TlsCryptoCipherSuiteProps, Topic1, TpAddress, TraceableTable, TraceableText, *TracedFailure*, TransformationISignalPropsIdent, *TransformationProps*, TransformationTechnology, Trigger, Variable Access, VariationPointProxy, ViewMap, VlanConfig, WaitPoint			
Attribute	***Type***	***Mult.***	***Kind***	***Note***
adminData	AdminData	0..1	aggr	This represents the administrative data for the identifiable object. **Tags:** atp.Splitkey=adminData xml.sequenceOffset=-40

▽

△

Class	***Identifiable*** (abstract)			
annotation	Annotation	*	aggr	Possibility to provide additional notes while defining a model element (e.g. the ECU Configuration Parameter Values). These are not intended as documentation but are mere design notes. **Tags:** atp.Splitkey=annotation xml.sequenceOffset=-25
category	CategoryString	0..1	attr	The category is a keyword that specializes the semantics of the Identifiable. It affects the expected existence of attributes and the applicability of constraints. **Tags:** xml.sequenceOffset=-50
desc	MultiLanguageOverview Paragraph	0..1	aggr	This represents a general but brief (one paragraph) description what the object in question is about. It is only one paragraph! Desc is intended to be collected into overview tables. This property helps a human reader to identify the object in question. More elaborate documentation, (in particular how the object is built or used) should go to "introduction". **Tags:** atp.Splitkey=desc xml.sequenceOffset=-60
introduction	DocumentationBlock	0..1	aggr	This represents more information about how the object in question is built or is used. Therefore it is a DocumentationBlock. **Tags:** atp.Splitkey=introduction xml.sequenceOffset=-30
uuid	String	0..1	attr	The purpose of this attribute is to provide a globally unique identifier for an instance of a meta-class. The values of this attribute should be globally unique strings prefixed by the type of identifier. For example, to include a DCE UUID as defined by The Open Group, the UUID would be preceded by "DCE:". The values of this attribute may be used to support merging of different AUTOSAR models. The form of the UUID (Universally Unique Identifier) is taken from a standard defined by the Open Group (was Open Software Foundation). This standard is widely used, including by Microsoft for COM (GUIDs) and by many companies for DCE, which is based on CORBA. The method for generating these 128-bit IDs is published in the standard and the effectiveness and uniqueness of the IDs is not in practice disputed. If the id namespace is omitted, DCE is assumed. An example is "DCE:2fac1234-31f8-11b4-a222-08002b34c003". The uuid attribute has no semantic meaning for an AUTOSAR model and there is no requirement for AUTOSAR tools to manage the timestamp. **Tags:** xml.attribute=true

Table D.36: Identifiable

Class	**ImplementationDataType**
Note	Describes a reusable data type on the implementation level. This will typically correspond to a typedef in C-code. **Tags:** atp.recommendedPackage=ImplementationDataTypes

▽

△

Class	**ImplementationDataType**			
Base	*ARElement*, *ARObject*, *AbstractImplementationDataType*, *AtpBlueprint*, *AtpClassifier*, *AtpType*, *Autosar DataType*, *CollectableElement*, *Identifiable*, *MultilanguageReferrable*, *PackageableElement*, *Referrable*			
Aggregated by	ARPackage.element			
Attribute	***Type***	***Mult.***	***Kind***	***Note***
dynamicArray SizeProfile	String	0..1	attr	Specifies the profile which the array will follow in case this data type is a variable size array.
isStructWith Optional Element	Boolean	0..1	attr	This attribute is only valid if the attribute category is set to STRUCTURE. If set to true, this attribute indicates that the ImplementationDataType has been created with the intention to define at least one element of the structure as optional.
subElement (ordered)	ImplementationData TypeElement	*	aggr	Specifies an element of an array, struct, or union data type. The aggregation of `ImplementationDataTypeElement` is subject to variability with the purpose to support the conditional existence of elements inside a `ImplementationDataType` representing a structure. **Stereotypes:** atpVariation **Tags:** vh.latestBindingTime=preCompileTime
symbolProps	SymbolProps	0..1	aggr	This represents the SymbolProps for the Implementation DataType. **Tags:** atp.Splitkey=symbolProps, symbolProps.short Name
typeEmitter	NameToken	0..1	attr	This attribute is used to control which part of the AUTOSAR toolchain is supposed to trigger data type definitions.

Table D.37: ImplementationDataType

Class	***InternalBehavior*** (abstract)			
Note	Common base class (abstract) for the internal behavior of both software components and basic software modules/clusters.			
Base	*ARObject*, *AtpClassifier*, *AtpFeature*, *AtpStructureElement*, *Identifiable*, *MultilanguageReferrable*, *Referrable*			
Subclasses	BswInternalBehavior, SwcInternalBehavior			
Aggregated by	*AtpClassifier*.atpFeature			
Attribute	***Type***	***Mult.***	***Kind***	***Note***

▽

△

Class	***InternalBehavior*** (abstract)			
constant Memory	ParameterData Prototype	*	aggr	Describes a read only memory object containing characteristic value(s) implemented by this Internal Behavior. The shortName of ParameterDataPrototype has to be equal to the ''C' identifier of the described constant. The characteristic value(s) might be shared between Sw ComponentPrototypes of the same SwComponentType. The aggregation of constantMemory is subject to variability with the purpose to support variability in the software component or module implementations. Typically different algorithms in the implementation are requiring different number of memory objects. **Stereotypes:** atpVariation **Tags:** atp.Splitkey=constantMemory, constantMemory.short Name, constantMemory.variationPoint.shortLabel vh.latestBindingTime=preCompileTime
constantValue Mapping	ConstantSpecification MappingSet	*	ref	Reference to the ConstantSpecificationMapping to be applied for the particular InternalBehavior **Tags:** atp.Splitkey=constantValueMapping
dataType Mapping	DataTypeMappingSet	*	ref	Reference to the DataTypeMapping to be applied for the particular InternalBehavior **Tags:** atp.Splitkey=dataTypeMapping
exclusiveArea	ExclusiveArea	*	aggr	This specifies an ExclusiveArea for this InternalBehavior. The exclusiveArea is local to the component resp. module. The aggregation of ExclusiveAreas is subject to variability. Note: the number of ExclusiveAreas might vary due to the conditional existence of RunnableEntities or BswModuleEntities. **Stereotypes:** atpVariation **Tags:** atp.Splitkey=exclusiveArea, exclusiveArea.shortName, exclusiveArea.variationPoint.shortLabel vh.latestBindingTime=preCompileTime
exclusiveArea NestingOrder	ExclusiveAreaNesting Order	*	aggr	This represents the set of ExclusiveAreaNestingOrder owned by the InternalBehavior. **Stereotypes:** atpVariation **Tags:** atp.Splitkey=exclusiveAreaNestingOrder, exclusiveArea NestingOrder.shortName, exclusiveAreaNesting Order.variationPoint.shortLabel vh.latestBindingTime=preCompileTime

▽

△

Class	***InternalBehavior*** (abstract)			
staticMemory	VariableDataPrototype	*	aggr	Describes a read and writeable static memory object representing measurerment variables implemented by this software component. The term "static" is used in the meaning of "non-temporary" and does not necessarily specify a linker encapsulation. This kind of memory is only supported if supportsMultipleInstantiation is FALSE. The shortName of the VariableDataPrototype has to be equal with the ''C' identifier of the described variable. The aggregation of staticMemory is subject to variability with the purpose to support variability in the software component's implementations. Typically different algorithms in the implementation are requiring different number of memory objects. **Stereotypes:** atpVariation **Tags:** atp.Splitkey=staticMemory, staticMemory.shortName, staticMemory.variationPoint.shortLabel vh.latestBindingTime=preCompileTime

Table D.38: InternalBehavior

Class	**ModeDeclaration**			
Note	Declaration of one Mode. The name and semantics of a specific mode is not defined in the meta-model.			
Base	*ARObject*, *AtpClassifier*, *AtpFeature*, *AtpStructureElement*, *Identifiable*, *MultilanguageReferrable*, *Referrable*			
Aggregated by	*AtpClassifier*.atpFeature, ModeDeclarationGroup.modeDeclaration			
Attribute	***Type***	***Mult.***	***Kind***	***Note***
value	PositiveInteger	0..1	attr	The RTE shall take the value of this attribute for generating the source code representation of this Mode Declaration.

Table D.39: ModeDeclaration

Class	**ModeDeclarationGroupPrototype**			
Note	The ModeDeclarationGroupPrototype specifies a set of Modes (ModeDeclarationGroup) which is provided or required in the given context.			
Base	*ARObject*, *AtpFeature*, *AtpPrototype*, *Identifiable*, *MultilanguageReferrable*, *Referrable*			
Aggregated by	*AtpClassifier*.atpFeature, BswModuleDescription.providedModeGroup, BswModuleDescription.requiredModeGroup, FirewallStateSwitchInterface.firewallStateMachine, FunctionGroupSet.functionGroup, ModeSwitchInterface.modeGroup, Process.processStateMachine, StateManagementStateNotification.stateMachine			
Attribute	***Type***	***Mult.***	***Kind***	***Note***
swCalibrationAccess	SwCalibrationAccessEnum	0..1	attr	This allows for specifying whether or not the enclosing ModeDeclarationGroupPrototype can be measured at run-time. This Attribute is only used by the AUTOSAR Classic Platform.
type	ModeDeclarationGroup	0..1	tref	The "collection of ModeDeclarations" (= ModeDeclarationGroup) supported by a component **Stereotypes:** isOfType **Tags:** atp.Splitkey=type

Table D.40: ModeDeclarationGroupPrototype

Primitive	**Numerical**
Note	This primitive specifies a numerical value. It can be denoted in different formats such as Decimal, Octal, Hexadecimal, Float. See the xsd pattern for details. The value can be expressed in octal, hexadecimal, binary representation. Negative numbers can only be expressed in decimal or float notation. **Tags:** xml.xsd.customType=NUMERICAL-VALUE xml.xsd.pattern=(0[xX][0-9a-fA-F]+)|(0[0-7]+)|(0[bB][0-1]+)|(([+\-]?[1-9][0-9]+(\.[0-9]+)?|[+\-]?[0-9](\.[0-9]+)?)([eE]([+\-]?)[0-9]+)?)|\.0|INF|-INF|NaN xml.xsd.type=string

Table D.41: Numerical

Class	**PPortPrototype**			
Note	Component port providing a certain port interface.			
Base	*ARObject*, *AbstractProvidedPortPrototype*, *AtpFeature*, *AtpPrototype*, *Identifiable*, *MultilanguageReferrable*, *PortPrototype*, *Referrable*			
Aggregated by	*AtpClassifier*.atpFeature, *SwComponentType*.port			
Attribute	***Type***	***Mult.***	***Kind***	***Note***
provided Interface	PortInterface	0..1	tref	The interface that this port provides. **Stereotypes:** isOfType **Tags:** atp.Splitkey=providedInterface

Table D.42: PPortPrototype

Class	**PduTriggering**			
Note	The PduTriggering describes on which channel the IPdu is transmitted. The Pdu routing by the PduR is only allowed for subclasses of IPdu. Depending on its relation to entities such channels and clusters it can be unambiguously deduced whether a fan-out is handled by the Pdu router or the Bus Interface. If the fan-out is specified between different clusters it shall be handled by the Pdu Router. If the fan-out is specified between different channels of the same cluster it shall be handled by the Bus Interface.			
Base	*ARObject*, *Identifiable*, *MultilanguageReferrable*, *Referrable*			
Aggregated by	*PhysicalChannel*.pduTriggering			
Attribute	***Type***	***Mult.***	***Kind***	***Note***
iPdu	Pdu	0..1	ref	Reference to the Pdu for which the PduTriggering is defined. One I-Pdu can be triggered on different channels (PduR fan-out). The Pdu routing by the PduR is only allowed for subclasses of IPdu. Nevertheless is the reference to the Pdu element necessary since the PduTriggering element is also used to specify the sending and receiving connections to Ecu Ports. **Tags:** atp.Splitkey=iPdu
iPduPort	IPduPort	*	ref	References to the IPduPort on every ECU of the system which sends and/or receives the I-PDU. References for both the sender and the receiver side shall be included when the system is completely defined. **Tags:** atp.Splitkey=iPduPort

▽

△

Class	PduTriggering			
iSignal Triggering	ISignalTriggering	*	ref	This reference provides the relationship to the ISignal Triggerings that are implemented by the PduTriggering. The reference is optional since no ISignalTriggering can be defined for DCM and Multiplexed Pdus. **Stereotypes:** atpVariation **Tags:** atp.Splitkey=iSignalTriggering, iSignalTriggering.iSignal Triggering, iSignalTriggering.variationPoint.shortLabel vh.latestBindingTime=postBuild
secOcCrypto Mapping	SecOcCryptoService Mapping	0..1	ref	This reference identifies the crypto profile applicable to the usage (send, receive) of the also referenced Secured IPdu. Obviously, this reference is only applicable if the Pdutriggering also references a SecuredIPdu in the role i Pdu. **Tags:** atp.Splitkey=secOcCryptoMapping atp.Status=obsolete
secOcCrypto ServiceMapping	SecOcCryptoService Mapping	0..1	ref	This reference identifies the crypto profile applicable to the usage (send, receive) of the also referenced Secured IPdu. Obviously, this reference is only applicable if the Pdutriggering also references a SecuredIPdu in the role i Pdu. **Stereotypes:** atpVariation **Tags:** atp.Splitkey=secOcCryptoServiceMapping, secOcCrypto ServiceMapping.secOcCryptoServiceMapping, secOc CryptoServiceMapping.variationPoint.shortLabel vh.latestBindingTime=postBuild
triggerIPduSend Condition	TriggerIPduSend Condition	*	aggr	Defines the trigger for the Com_TriggerIPDUSend API call. Only if all defined TriggerIPduSendConditions evaluate to true (AND associated) the Com_Trigger IPDUSend API shall be called. **Tags:** atp.Splitkey=triggerIPduSendCondition

Table D.43: PduTriggering

Class	*PhysicalChannel* (abstract)			
Note	A physical channel is the transmission medium that is used to send and receive information between communicating ECUs. Each CommunicationCluster has at least one physical channel. Bus systems like CAN and LIN only have exactly one PhysicalChannel. A FlexRay cluster may have more than one PhysicalChannels that may be used in parallel for redundant communication. An ECU is part of a cluster if it contains at least one controller that is connected to at least one channel of the cluster.#			
Base	*ARObject*, *Identifiable*, *MultilanguageReferrable*, *Referrable*			
Subclasses	*AbstractCanPhysicalChannel*, EthernetPhysicalChannel, FlexrayPhysicalChannel, LinPhysicalChannel, UserDefinedPhysicalChannel			
Aggregated by	*CommunicationCluster*.physicalChannel			
Attribute	**Type**	**Mult.**	**Kind**	**Note**

▽

△

Class	***PhysicalChannel*** (abstract)			
comm Connector	Communication Connector	*	ref	Reference to the ECUInstance via a Communication Connector to which the channel is connected. atpVariation: Variable assignment of Physical Channels to different CommunicationConnectors is expressed with this variation. **Stereotypes:** atpVariation **Tags:** atp.Splitkey=commConnector, comm Connector.communicationConnector, comm Connector.variationPoint.shortLabel vh.latestBindingTime=postBuild This Attribute is only used by the AUTOSAR Classic Platform.
frameTriggering	FrameTriggering	*	aggr	One frame triggering is defined for exactly one channel. Channels may have assigned an arbitrary number of frame triggerings. atpVariation: If signals/PDUs/frames are variable, the corresponding triggerings shall be variable, too. **Stereotypes:** atpVariation **Tags:** atp.Splitkey=frameTriggering, frameTriggering.short Name, frameTriggering.variationPoint.shortLabel vh.latestBindingTime=postBuild This Attribute is only used by the AUTOSAR Classic Platform.
iSignal Triggering	ISignalTriggering	*	aggr	One ISignalTriggering is defined for exactly one channel. Channels may have assigned an arbitrary number of ISignaltriggerings. atpVariation: If signals/PDUs/frames are variable, the corresponding triggerings shall be variable, too. **Stereotypes:** atpVariation **Tags:** atp.Splitkey=iSignalTriggering, iSignalTriggering.short Name, iSignalTriggering.variationPoint.shortLabel vh.latestBindingTime=postBuild This Attribute is only used by the AUTOSAR Classic Platform.
managed Physical Channel	PhysicalChannel	*	ref	Reference between a channel with role managing channel and a channel with role managed channel. **Tags:** atp.Splitkey=managedPhysicalChannel This Attribute is only used by the AUTOSAR Classic Platform.
pduTriggering	PduTriggering	*	aggr	One PduTriggering is defined for exactly one channel. Channels may have assigned an arbitrary number of I-Pdu triggerings. atpVariation: If signals/PDUs/frames are variable, the corresponding triggerings shall be variable, too. **Stereotypes:** atpVariation **Tags:** atp.Splitkey=pduTriggering, pduTriggering.shortName, pduTriggering.variationPoint.shortLabel vh.latestBindingTime=postBuild This Attribute is only used by the AUTOSAR Classic Platform.

Table D.44: PhysicalChannel

Class	***PortInterface*** (abstract)			
Note	Abstract base class for an interface that is either provided or required by a port of a software component.			
Base	*ARElement*, *ARObject*, *AtpBlueprint*, *AtpClassifier*, *AtpType*, *CollectableElement*, *Identifiable*, *MultilanguageReferrable*, *PackageableElement*, *Referrable*			
Subclasses	ClientServerInterface, *DataInterface*, ModeSwitchInterface, TriggerInterface			
Aggregated by	ARPackage.element			
Attribute	***Type***	***Mult.***	***Kind***	***Note***
isService	Boolean	0..1	attr	This flag is set if the `PortInterface` is to be used for communication between an • `ApplicationSwComponentType` or • `ServiceProxySwComponentType` or • `SensorActuatorSwComponentType` or • `ComplexDeviceDriverSwComponentType` • `ServiceSwComponentType` • `EcuAbstractionSwComponentType` and a `ServiceSwComponentType` (namely an AUTOSAR Service) located on the same ECU. Otherwise the flag is not set. **Stereotypes:** atpVariation **Tags:** vh.latestBindingTime=blueprintDerivationTime This Attribute is only used by the AUTOSAR Classic Platform.
serviceKind	ServiceProviderEnum	0..1	attr	This attribute provides further details about the nature of the applied service. This Attribute is only used by the AUTOSAR Classic Platform.

Table D.45: PortInterface

Class	***PortPrototype*** (abstract)			
Note	Base class for the ports of an AUTOSAR software component. The aggregation of PortPrototypes is subject to variability with the purpose to support the conditional existence of ports.			
Base	*ARObject*, *AtpFeature*, *AtpPrototype*, *Identifiable*, *MultilanguageReferrable*, *Referrable*			
Subclasses	*AbstractProvidedPortPrototype*, *AbstractRequiredPortPrototype*			
Aggregated by	*AtpClassifier*.atpFeature, *SwComponentType*.port			
Attribute	***Type***	***Mult.***	***Kind***	***Note***
clientServer Annotation	ClientServerAnnotation	*	aggr	Annotation of this `PortPrototype` with respect to client/server communication. **Tags:** atp.Splitkey=clientServerAnnotation
delegatedPort Annotation	DelegatedPort Annotation	0..1	aggr	Annotations on this delegated port. **Tags:** atp.Splitkey=delegatedPortAnnotation
ioHwAbstraction Server Annotation	IoHwAbstractionServer Annotation	*	aggr	Annotations on this IO Hardware Abstraction port. **Tags:** atp.Splitkey=ioHwAbstractionServerAnnotation
modePort Annotation	ModePortAnnotation	*	aggr	Annotations on this mode port. **Tags:** atp.Splitkey=modePortAnnotation
nvDataPort Annotation	NvDataPortAnnotation	*	aggr	Annotations on this non voilatile data port. **Tags:** atp.Splitkey=nvDataPortAnnotation

▽

△

Class	***PortPrototype*** (abstract)			
parameterPort Annotation	ParameterPort Annotation	*	aggr	Annotations on this parameter port. **Tags:** atp.Splitkey=parameterPortAnnotation
senderReceiver Annotation	SenderReceiver Annotation	*	aggr	Collection of annotations of this ports sender/receiver communication. **Tags:** atp.Splitkey=senderReceiverAnnotation
triggerPort Annotation	TriggerPortAnnotation	*	aggr	Annotations on this trigger port. **Tags:** atp.Splitkey=triggerPortAnnotation

Table D.46: PortPrototype

Class	**PortPrototypeBlueprint**			
Note	This meta-class represents the ability to express a blueprint of a PortPrototype by referring to a particular PortInterface. This blueprint can then be used as a guidance to create particular PortPrototypes which are defined according to this blueprint. By this it is possible to standardize application interfaces without the need to also standardize software-components with PortPrototypes typed by the standardized Port Interfaces. **Tags:** atp.recommendedPackage=PortPrototypeBlueprints			
Base	*ARElement*, *ARObject*, *AtpBlueprint*, *AtpClassifier*, *AtpFeature*, *AtpStructureElement*, *Collectable Element*, *Identifiable*, *MultilanguageReferrable*, *PackageableElement*, *Referrable*			
Aggregated by	ARPackage.element, *AtpClassifier*.atpFeature			
Attribute	***Type***	***Mult.***	***Kind***	***Note***
initValue	PortPrototypeBlueprint InitValue	*	aggr	This specifies the init values for the dataElements in the particular PortPrototypeBlueprint. **Tags:** atp.Splitkey=initValue
interface	PortInterface	0..1	ref	This is the interface for which the blueprint is defined. It may be a blueprint itself or a standardized PortInterface **Tags:** atp.Splitkey=interface
providedCom Spec	PPortComSpec	*	aggr	Provided communication attributes per interface element (data element or operation). **Tags:** atp.Splitkey=providedComSpec, providedCom Spec.dataElement, providedComSpec.getter, provided ComSpec.modeGroup, providedComSpec.operation, providedComSpec.parameter, providedComSpec.setter, providedComSpec.variable
requiredCom Spec	RPortComSpec	*	aggr	Required communication attributes, one for each interface element. **Tags:** atp.Splitkey=requiredComSpec, requiredCom Spec.dataElement, requiredComSpec.getter, required ComSpec.modeGroup, requiredComSpec.operation, requiredComSpec.parameter, requiredComSpec.setter, requiredComSpec.shortLabel, requiredComSpec.variable

Table D.47: PortPrototypeBlueprint

Class	**RPortPrototype**			
Note	Component port requiring a certain port interface.			
Base	*ARObject*, *AbstractRequiredPortPrototype*, *AtpFeature*, *AtpPrototype*, *Identifiable*, *Multilanguage Referrable*, *PortPrototype*, *Referrable*			
Aggregated by	*AtpClassifier*.atpFeature, *SwComponentType*.port			
Attribute	***Type***	***Mult.***	***Kind***	***Note***

▽

△

Class	RPortPrototype			
mayBe Unconnected	Boolean	0..1	attr	If set to true, this attribute indicates that the enclosing `RPortPrototype` may be left unconnected and that this aspect has explicitly been considered in the software-component's design. This Attribute is only used by the AUTOSAR Classic Platform.
required Interface	PortInterface	0..1	tref	The interface that this port requires. **Stereotypes:** isOfType **Tags:** atp.Splitkey=requiredInterface

Table D.48: RPortPrototype

Class	*RTEEvent* (abstract)			
Note	Abstract base class for all RTE-related events			
Base	*ARObject*, *AbstractEvent*, *AtpClassifier*, *AtpFeature*, *AtpStructureElement*, *Identifiable*, *MultilanguageReferrable*, *Referrable*			
Subclasses	AsynchronousServerCallReturnsEvent, BackgroundEvent, DataReceiveErrorEvent, DataReceivedEvent, DataSendCompletedEvent, DataWriteCompletedEvent, ExternalTriggerOccurredEvent, InitEvent, InternalTriggerOccurredEvent, ModeSwitchedAckEvent, OperationInvokedEvent, OsTaskExecutionEvent, SwcModeManagerErrorEvent, SwcModeSwitchEvent, TimingEvent, TransformerHardErrorEvent			
Aggregated by	*AtpClassifier*.atpFeature, SwcInternalBehavior.event			
Attribute	**Type**	**Mult.**	**Kind**	**Note**
disabledMode	ModeDeclaration	*	iref	Reference to the Modes that disable the Event. **Tags:** atp.Splitkey=disabledMode, disabledMode.contextPort, disabledMode.contextModeDeclarationGroupPrototype, disabledMode.targetModeDeclaration **InstanceRef implemented by:** RModeInAtomicSwcInstanceRef
startOnEvent	RunnableEntity	0..1	ref	The referenced `RunnableEntity` starts when the corresponding `RTEEvent` is raised. **Tags:** atp.Splitkey=startOnEvent

Table D.49: RTEEvent

Class	*Referrable* (abstract)			
Note	Instances of this class can be referred to by their identifier (while adhering to namespace borders).			
Base	*ARObject*			
Subclasses	*AtpDefinition*, BswDistinguishedPartition, *BswModuleCallPoint*, BswModuleClientServerEntry, BswVariableAccess, CouplingPortTrafficClassAssignment, *DiagnosticEnvModeElement*, EthernetPriorityRegeneration, ExclusiveAreaNestingOrder, *HwDescriptionEntity*, *ImplementationProps*, LinSlaveConfigIdent, ModeTransition, *MultilanguageReferrable*, PncMappingIdent, *SingleLanguageReferrable*, SoConIPduIdentifier, TpConnectionIdent			
Attribute	**Type**	**Mult.**	**Kind**	**Note**
shortName	Identifier	1	attr	This specifies an identifying shortName for the object. It needs to be unique within its context and is intended for humans but even more for technical reference. **Stereotypes:** atpIdentityContributor **Tags:** xml.enforceMinMultiplicity=true xml.sequenceOffset=-100

▽

△

Class	*Referrable* (abstract)			
shortName Fragment	ShortNameFragment	*	aggr	This specifies how the Referrable.shortName is composed of several shortNameFragments. **Tags:** atp.Splitkey=shortNameFragment xml.sequenceOffset=-90

Table D.50: Referrable

Class	**ResourceConsumption**			
Note	Description of consumed resources by one implementation of a software.			
Base	*ARObject*, *Identifiable*, *MultilanguageReferrable*, *Referrable*			
Aggregated by	EcuResourceEstimation.bswResourceEstimation, EcuResourceEstimation.rteResourceEstimation, *Implementation*.resourceConsumption, StateDependentStartupConfig.resourceConsumption			
Attribute	***Type***	***Mult.***	***Kind***	***Note***
accessCount Set	AccessCountSet	*	aggr	Set of access count values **Stereotypes:** atpVariation **Tags:** atp.Splitkey=accessCountSet, accessCountSet.variation Point.shortLabel vh.latestBindingTime=preCompileTime This Attribute is only used by the AUTOSAR Classic Platform.
executionTime	ExecutionTime	*	aggr	Collection of the execution time descriptions for this implementation. The aggregation of executionTime is subject to variability with the purpose to support the conditional existence of runnable entities. **Stereotypes:** atpVariation **Tags:** atp.Splitkey=executionTime, executionTime.shortName, executionTime.variationPoint.shortLabel vh.latestBindingTime=preCompileTime This Attribute is only used by the AUTOSAR Classic Platform.
heapUsage	HeapUsage	*	aggr	Collection of the heap memory allocated by this implementation. **Stereotypes:** atpVariation **Tags:** atp.Splitkey=heapUsage, heapUsage.shortName, heap Usage.variationPoint.shortLabel vh.latestBindingTime=preCompileTime This Attribute is only used by the AUTOSAR Classic Platform.
memorySection	MemorySection	*	aggr	An abstract memory section required by this Implementation. **Stereotypes:** atpVariation **Tags:** atp.Splitkey=memorySection, memorySection.short Name, memorySection.variationPoint.shortLabel vh.latestBindingTime=preCompileTime This Attribute is only used by the AUTOSAR Classic Platform.

▽

△

Class	**ResourceConsumption**			
sectionName Prefix	SectionNamePrefix	*	aggr	A prefix to be used for the memory section symbol in the code. **Stereotypes:** atpVariation **Tags:** atp.Splitkey=sectionNamePrefix, sectionNamePrefix.shortName, sectionNamePrefix.variationPoint.shortLabel vh.latestBindingTime=preCompileTime This Attribute is only used by the AUTOSAR Classic Platform.
stackUsage	StackUsage	*	aggr	Collection of the stack memory usage for each runnable entity of this implementation. The aggregation of Stack Usage is subject to variability with the purpose to support the conditional existence of runnable entities. **Stereotypes:** atpVariation **Tags:** atp.Splitkey=stackUsage, stackUsage.shortName, stackUsage.variationPoint.shortLabel vh.latestBindingTime=preCompileTime This Attribute is only used by the AUTOSAR Classic Platform.

Table D.51: ResourceConsumption

Class	**RootSwCompositionPrototype**			
Note	The RootSwCompositionPrototype represents the top-level-composition of software components within a given System. According to the use case of the System, this may for example be a more or less complete VFB description, the software of a System Extract or the software of a flat ECU Extract with only atomic SWCs. Therefore the RootSwComposition will only occasionally contain all atomic software components that are used in a complete VFB System. The OEM is primarily interested in the required functionality and the interfaces defining the integration of the Software Component into the System. The internal structure of such a component contains often substantial intellectual property of a supplier. Therefore a top-level software composition will often contain empty compositions which represent subsystems. The contained SwComponentPrototypes are fully specified by their SwComponentTypes (including Port Prototypes, PortInterfaces, VariableDataPrototypes, SwcInternalBehavior etc.), and their ports are interconnected using SwConnectorPrototypes.			
Base	*ARObject*, *AtpFeature*, *AtpPrototype*, *Identifiable*, *MultilanguageReferrable*, *Referrable*			
Aggregated by	*AtpClassifier*.atpFeature, System.rootSoftwareComposition			
Attribute	***Type***	***Mult.***	***Kind***	***Note***
calibration ParameterValue Set	CalibrationParameter ValueSet	*	ref	Used CalibrationParameterValueSet for instance specific initialization of calibration parameters. **Tags:** atp.Splitkey=calibrationParameterValueSet This Attribute is only used by the AUTOSAR Classic Platform.
flatMap	FlatMap	0..1	ref	The FlatMap used in the scope of this RootSw CompositionPrototype. **Tags:** atp.Splitkey=flatMap This Attribute is only used by the AUTOSAR Classic Platform.
software Composition	CompositionSw ComponentType	0..1	tref	We assume that there is exactly one top-level composition that includes all Component instances of the system. **Stereotypes:** isOfType **Tags:** atp.Splitkey=softwareComposition

Table D.52: RootSwCompositionPrototype

Class	**RunnableEntity**			
Note	A `RunnableEntity` represents the smallest code-fragment that is provided by an `AtomicSwComponentType` and are executed under control of the RTE. `RunnableEntity`s are for instance set up to respond to data reception or operation invocation on a server.			
Base	*ARObject*, *AtpClassifier*, *AtpFeature*, *AtpStructureElement*, *ExecutableEntity*, *Identifiable*, *MultilanguageReferrable*, *Referrable*			
Aggregated by	*AtpClassifier*.atpFeature, SwcInternalBehavior.runnable			
Attribute	***Type***	***Mult.***	***Kind***	***Note***
argument (ordered)	RunnableEntity Argument	*	aggr	This represents the formal definition of an argument to a RunnableEntity.
asynchronous ServerCall ResultPoint	AsynchronousServer CallResultPoint	*	aggr	The server call result point admits a runnable to fetch the result of an asynchronous server call. The aggregation of AsynchronousServerCallResultPoint is subject to variability with the purpose to support the conditional existence of client server PortPrototypes and the variant existence of server call result points in the implementation. **Stereotypes:** atpVariation **Tags:** atp.Splitkey=asynchronousServerCallResultPoint, asynchronousServerCallResultPoint.shortName, asynchronousServerCallResultPoint.variationPoint.shortLabel vh.latestBindingTime=preCompileTime This Attribute is only used by the AUTOSAR Classic Platform.
canBeInvoked Concurrently	Boolean	0..1	attr	If the value of this attribute is set to "true" the enclosing `RunnableEntity` can be invoked concurrently (even for one instance of the corresponding `AtomicSwComponentType`). This implies that it is the responsibility of the implementation of the `RunnableEntity` to take care of this form of concurrency.
dataRead Access	VariableAccess	*	aggr	RunnableEntity has implicit read access to dataElement of a sender-receiver PortPrototype or nv data of a nv data PortPrototype. The aggregation of dataReadAccess is subject to variability with the purpose to support the conditional existence of sender receiver ports or the variant existence of dataReadAccess in the implementation. **Stereotypes:** atpVariation **Tags:** atp.Splitkey=dataReadAccess, dataReadAccess.shortName, dataReadAccess.variationPoint.shortLabel vh.latestBindingTime=preCompileTime

▽

△

Class	**RunnableEntity**			
dataReceive PointBy Argument	VariableAccess	*	aggr	RunnableEntity has explicit read access to dataElement of a sender-receiver PortPrototype or nv data of a nv data PortPrototype. The result is passed back to the application by means of an argument in the function signature. The aggregation of dataReceivePointByArgument is subject to variability with the purpose to support the conditional existence of sender receiver PortPrototype or the variant existence of data receive points in the implementation. **Stereotypes:** atpVariation **Tags:** atp.Splitkey=dataReceivePointByArgument, dataReceive PointByArgument.shortName, dataReceivePointBy Argument.variationPoint.shortLabel vh.latestBindingTime=preCompileTime
dataReceive PointByValue	VariableAccess	*	aggr	RunnableEntity has explicit read access to dataElement of a sender-receiver PortPrototype or nv data of a nv data PortPrototype. The result is passed back to the application by means of the return value. The aggregation of dataReceivePointBy Value is subject to variability with the purpose to support the conditional existence of sender receiver ports or the variant existence of data receive points in the implementation. **Stereotypes:** atpVariation **Tags:** atp.Splitkey=dataReceivePointByValue, dataReceivePoint ByValue.shortName, dataReceivePointByValue.variation Point.shortLabel vh.latestBindingTime=preCompileTime
dataSendPoint	VariableAccess	*	aggr	RunnableEntity has explicit write access to dataElement of a sender-receiver PortPrototype or nv data of a nv data PortPrototype. The aggregation of dataSendPoint is subject to variability with the purpose to support the conditional existence of sender receiver PortPrototype or the variant existence of data send points in the implementation. **Stereotypes:** atpVariation **Tags:** atp.Splitkey=dataSendPoint, dataSendPoint.shortName, dataSendPoint.variationPoint.shortLabel vh.latestBindingTime=preCompileTime
dataWrite Access	VariableAccess	*	aggr	RunnableEntity has implicit write access to dataElement of a sender-receiver PortPrototype or nv data of a nv data PortPrototype. The aggregation of dataWriteAccess is subject to variability with the purpose to support the conditional existence of sender receiver ports or the variant existence of dataWriteAccess in the implementation. **Stereotypes:** atpVariation **Tags:** atp.Splitkey=dataWriteAccess, dataWriteAccess.short Name, dataWriteAccess.variationPoint.shortLabel vh.latestBindingTime=preCompileTime

▽

△

Class	**RunnableEntity**			
external TriggeringPoint	ExternalTriggeringPoint	*	aggr	The aggregation of ExternalTriggeringPoint is subject to variability with the purpose to support the conditional existence of trigger ports or the variant existence of external triggering points in the implementation. **Stereotypes:** atpVariation **Tags:** atp.Splitkey=externalTriggeringPoint, externalTriggering Point.ident.shortName, externalTriggeringPoint.variation Point.shortLabel vh.latestBindingTime=preCompileTime
internal TriggeringPoint	InternalTriggeringPoint	*	aggr	The aggregation of InternalTriggeringPoint is subject to variability with the purpose to support the variant existence of internal triggering points in the implementation. **Stereotypes:** atpVariation **Tags:** atp.Splitkey=internalTriggeringPoint, internalTriggering Point.shortName, internalTriggeringPoint.variation Point.shortLabel vh.latestBindingTime=preCompileTime
modeAccess Point	ModeAccessPoint	*	aggr	The runnable has a mode access point. The aggregation of ModeAccessPoint is subject to variability with the purpose to support the conditional existence of mode ports or the variant existence of mode access points in the implementation. **Stereotypes:** atpVariation **Tags:** atp.Splitkey=modeAccessPoint, modeAccess Point.ident.shortName, modeAccessPoint.variation Point.shortLabel vh.latestBindingTime=preCompileTime
modeSwitch Point	ModeSwitchPoint	*	aggr	The runnable has a mode switch point. The aggregation of ModeSwitchPoint is subject to variability with the purpose to support the conditional existence of mode ports or the variant existence of mode switch points in the implementation. **Stereotypes:** atpVariation **Tags:** atp.Splitkey=modeSwitchPoint, modeSwitchPoint.short Name, modeSwitchPoint.variationPoint.shortLabel vh.latestBindingTime=preCompileTime
parameter Access	ParameterAccess	*	aggr	The presence of a ParameterAccess implies that a RunnableEntity needs read only access to a Parameter DataPrototype which may either be local or within a Port Prototype. The aggregation of ParameterAccess is subject to variability with the purpose to support the conditional existence of parameter ports and component local parameters as well as the variant existence of Parameter Access (points) in the implementation. **Stereotypes:** atpVariation **Tags:** atp.Splitkey=parameterAccess, parameterAccess.short Name, parameterAccess.variationPoint.shortLabel vh.latestBindingTime=preCompileTime

▽

△

Class	**RunnableEntity**			
readLocal Variable	VariableAccess	*	aggr	The presence of a readLocalVariable implies that a RunnableEntity needs read access to a VariableData Prototype in the role of implicitInterRunnableVariable or explicitInterRunnableVariable. The aggregation of readLocalVariable is subject to variability with the purpose to support the conditional existence of implicitInterRunnableVariable and explicit InterRunnableVariable or the variant existence of read LocalVariable (points) in the implementation. **Stereotypes:** atpVariation **Tags:** atp.Splitkey=readLocalVariable, readLocalVariable.short Name, readLocalVariable.variationPoint.shortLabel vh.latestBindingTime=preCompileTime
serverCallPoint	ServerCallPoint	*	aggr	The RunnableEntity has a ServerCallPoint. The aggregation of ServerCallPoint is subject to variability with the purpose to support the conditional existence of client server PortPrototypes or the variant existence of server call points in the implementation. **Stereotypes:** atpVariation **Tags:** atp.Splitkey=serverCallPoint, serverCallPoint.shortName, serverCallPoint.variationPoint.shortLabel vh.latestBindingTime=preCompileTime This Attribute is only used by the AUTOSAR Classic Platform.
symbol	CIdentifier	0..1	attr	The symbol describing this `RunnableEntity`'s entry point. This is considered the API of the `RunnableEntity` and is required during the RTE contract phase.
waitPoint	WaitPoint	*	aggr	The `WaitPoint` associated with the `RunnableEntity`. **Tags:** atp.Splitkey=waitPoint, waitPoint.shortName
writtenLocal Variable	VariableAccess	*	aggr	The presence of a writtenLocalVariable implies that a RunnableEntity needs write access to a VariableData Prototype in the role of implicitInterRunnableVariable or explicitInterRunnableVariable. The aggregation of writtenLocalVariable is subject to variability with the purpose to support the conditional existence of implicitInterRunnableVariable and explicit InterRunnableVariable or the variant existence of written LocalVariable (points) in the implementation. **Stereotypes:** atpVariation **Tags:** atp.Splitkey=writtenLocalVariable, writtenLocal Variable.shortName, writtenLocalVariable.variation Point.shortLabel vh.latestBindingTime=preCompileTime

Table D.53: RunnableEntity

Class	**SenderReceiverInterface**
Note	A sender/receiver interface declares a number of data elements to be sent and received. **Tags:** atp.recommendedPackage=PortInterfaces
Base	*ARElement*, *ARObject*, *AtpBlueprint*, *AtpClassifier*, *AtpType*, *CollectableElement*, *DataInterface*, *Identifiable*, *MultilanguageReferrable*, *PackageableElement*, *PortInterface*, *Referrable*
Aggregated by	ARPackage.element

▽

△

Class	SenderReceiverInterface			
Attribute	**Type**	**Mult.**	**Kind**	**Note**
dataElement	VariableDataPrototype	*	aggr	The data elements of this `SenderReceiverInterface`. **Tags:** atp.Splitkey=dataElement, dataElement.shortName
invalidationPolicy	InvalidationPolicy	*	aggr	InvalidationPolicy for a particular dataElement **Tags:** atp.Splitkey=invalidationPolicy
metaDataItemSet	MetaDataItemSet	*	aggr	This aggregation defines fixed sets of meta-data items associated with `dataElement`s of the enclosing `SenderReceiverInterface` **Tags:** atp.Splitkey=metaDataItemSet

Table D.54: SenderReceiverInterface

Class	SensorActuatorSwComponentType			
Note	The SensorActuatorSwComponentType introduces the possibility to link from the software representation of a sensor/actuator to its hardware description provided by the ECU Resource Template. **Tags:** atp.recommendedPackage=SwComponentTypes			
Base	*ARElement*, *ARObject*, *AtomicSwComponentType*, *AtpBlueprint*, *AtpClassifier*, *AtpType*, *CollectableElement*, *Identifiable*, *MultilanguageReferrable*, *PackageableElement*, *Referrable*, *SwComponentType*			
Aggregated by	ARPackage.element			
Attribute	**Type**	**Mult.**	**Kind**	**Note**
sensorActuator	HwDescriptionEntity	0..1	ref	Reference from the Sensor Actuator Software Component Type to the description of the actual hardware. **Tags:** atp.Splitkey=sensorActuator

Table D.55: SensorActuatorSwComponentType

Class	SwComponentPrototype			
Note	Role of a software component within a composition.			
Base	*ARObject*, *AtpFeature*, *AtpPrototype*, *Identifiable*, *MultilanguageReferrable*, *Referrable*			
Aggregated by	*AtpClassifier*.atpFeature, CompositionSwComponentType.component			
Attribute	**Type**	**Mult.**	**Kind**	**Note**
type	SwComponentType	0..1	tref	Type of the instance. **Stereotypes:** isOfType **Tags:** atp.Splitkey=type

Table D.56: SwComponentPrototype

Class	***SwComponentType*** (abstract)			
Note	Base class for AUTOSAR software components.			
Base	*ARElement*, *ARObject*, *AtpBlueprint*, *AtpClassifier*, *AtpType*, *CollectableElement*, *Identifiable*, *MultilanguageReferrable*, *PackageableElement*, *Referrable*			
Subclasses	*AtomicSwComponentType*, CompositionSwComponentType, ParameterSwComponentType			
Aggregated by	ARPackage.element			
Attribute	**Type**	**Mult.**	**Kind**	**Note**

▽

△

Class	***SwComponentType*** (abstract)			
consistency Needs	ConsistencyNeeds	*	aggr	This represents the collection of `ConsistencyNeeds` owned by the enclosing `SwComponentType`. **Stereotypes:** atpVariation **Tags:** atp.Splitkey=consistencyNeeds, consistencyNeeds.shortName, consistencyNeeds.variationPoint.shortLabel vh.latestBindingTime=preCompileTime This Attribute is only used by the AUTOSAR Classic Platform.
port	PortPrototype	*	aggr	The `PortPrototype`s through which this `SwComponentType` can communicate. The aggregation of `PortPrototype` is subject to variability with the purpose to support the conditional existence of `PortPrototype`s. **Stereotypes:** atpVariation **Tags:** atp.Splitkey=port, port.shortName, port.variationPoint.shortLabel vh.latestBindingTime=preCompileTime
portGroup	PortGroup	*	aggr	A port group being part of this component. **Stereotypes:** atpVariation **Tags:** atp.Splitkey=portGroup, portGroup.shortName, portGroup.variationPoint.shortLabel vh.latestBindingTime=preCompileTime
swcMapping Constraint	SwComponentMapping Constraints	*	ref	Reference to constraints that are valid for this SwComponentType. **Tags:** atp.Splitkey=swcMappingConstraint This Attribute is only used by the AUTOSAR Classic Platform.
swComponent Documentation	SwComponent Documentation	0..1	aggr	This adds a documentation to the `SwComponentType`. **Stereotypes:** atpVariation **Tags:** atp.Splitkey=swComponentDocumentation, swComponentDocumentation.variationPoint.shortLabel vh.latestBindingTime=preCompileTime xml.sequenceOffset=-10
unitGroup	UnitGroup	*	ref	This allows for the specification of which `UnitGroup`s are relevant in the context of referencing `SwComponentType`. **Tags:** atp.Splitkey=unitGroup This Attribute is only used by the AUTOSAR Classic Platform.

Table D.57: SwComponentType

Class	**SwSystemconstantValueSet**			
Note	This meta-class represents the ability to specify a set of system constant values. **Tags:** atp.recommendedPackage=SwSystemconstantValueSets			
Base	*ARElement*, *ARObject*, *CollectableElement*, *Identifiable*, *MultilanguageReferrable*, *Packageable Element*, *Referrable*			
Aggregated by	ARPackage.element			
Attribute	***Type***	***Mult.***	***Kind***	***Note***

▽

△

Class	SwSystemconstantValueSet			
sw Systemconstant Value	SwSystemconstValue	*	aggr	This is one particular value of a system constant. **Tags:** atp.Splitkey=swSystemconstantValue

Table D.58: SwSystemconstantValueSet

Class	SwcInternalBehavior			
Note	The `SwcInternalBehavior` of an `AtomicSwComponentType` describes the relevant aspects of the software-component with respect to the RTE, i.e. the `RunnableEntity`s and the `RTEEvent`s they respond to.			
Base	*ARObject*, *AtpClassifier*, *AtpFeature*, *AtpStructureElement*, *Identifiable*, *InternalBehavior*, *MultilanguageReferrable*, *Referrable*			
Aggregated by	*AtomicSwComponentType*.internalBehavior, *AtpClassifier*.atpFeature			
Attribute	**Type**	**Mult.**	**Kind**	**Note**
arTypedPer Instance Memory	VariableDataPrototype	*	aggr	Defines an AUTOSAR typed memory-block that needs to be available for each instance of the SW-component. This is typically only useful if `supportsMultipleInstantiation` is set to "true" or if the component defines NVRAM access via permanent blocks. The aggregation of `arTypedPerInstanceMemory` is subject to variability with the purpose to support variability in the software component's implementations. Typically different algorithms in the implementation are requiring different number of memory objects. **Stereotypes:** atpVariation **Tags:** atp.Splitkey=arTypedPerInstanceMemory, arTypedPer InstanceMemory.shortName, arTypedPerInstance Memory.variationPoint.shortLabel vh.latestBindingTime=preCompileTime
event	RTEEvent	*	aggr	This is a `RTEEvent` specified for the particular `SwcInternalBehavior`. The aggregation of `RTEEvent` is subject to variability with the purpose to support the conditional existence of `RTEEvent`s. Note: the number of `RTEEvent`s might vary due to the conditional existence of `PortPrototype`s using `DataReceivedEvent`s or due to different scheduling needs of algorithms. **Stereotypes:** atpVariation **Tags:** atp.Splitkey=event, event.shortName, event.variation Point.shortLabel vh.latestBindingTime=preCompileTime
exclusiveArea Policy	SwcExclusiveArea Policy	*	aggr	Options how to generate the ExclusiveArea related APIs. When no SwcExclusiveAreaPolicy is specified for an ExclusiveArea the default values apply. **Stereotypes:** atpVariation **Tags:** atp.Splitkey=exclusiveAreaPolicy, exclusiveArea Policy.variationPoint.shortLabel vh.latestBindingTime=preCompileTime

▽

△

Class	**SwcInternalBehavior**			
explicitInter Runnable Variable	VariableDataPrototype	*	aggr	Implement state message semantics for establishing communication among runnables of the same component. The aggregation of explicitInterRunnable Variable is subject to variability with the purpose to support variability in the software components implementations. Typically different algorithms in the implementation are requiring different number of memory objects. **Stereotypes:** atpVariation **Tags:** atp.Splitkey=explicitInterRunnableVariable, explicitInter RunnableVariable.shortName, explicitInterRunnable Variable.variationPoint.shortLabel vh.latestBindingTime=preCompileTime
implicitInter Runnable Variable	VariableDataPrototype	*	aggr	Implement state message semantics for establishing communication among runnables of the same component. The aggregation of implicitInterRunnable Variable is subject to variability with the purpose to support variability in the software components implementations. Typically different algorithms in the implementation are requiring different number of memory objects. **Stereotypes:** atpVariation **Tags:** atp.Splitkey=implicitInterRunnableVariable, implicitInter RunnableVariable.shortName, implicitInterRunnable Variable.variationPoint.shortLabel vh.latestBindingTime=preCompileTime
includedData TypeSet	IncludedDataTypeSet	*	aggr	The `includedDataTypeSet` is used by a software component for its implementation. **Tags:** atp.Splitkey=includedDataTypeSet
includedMode Declaration GroupSet	IncludedMode DeclarationGroupSet	*	aggr	This aggregation represents the included Mode DeclarationGroups **Tags:** atp.Splitkey=includedModeDeclarationGroupSet
instantiation DataDefProps	InstantiationDataDef Props	*	aggr	The purpose of this is that within the context of a given SwComponentType some data def properties of individual instantiations can be modified. The aggregation of InstantiationDataDefProps is subject to variability with the purpose to support the conditional existence of Port Prototypes and component local memories like "per InstanceParameter" or "arTypedPerInstanceMemory". **Stereotypes:** atpVariation **Tags:** atp.Splitkey=instantiationDataDefProps, instantiationData DefProps.variationPoint.shortLabel vh.latestBindingTime=preCompileTime
perInstance Memory	PerInstanceMemory	*	aggr	Defines a per-instance memory object needed by this software component. The aggregation of PerInstance Memory is subject to variability with the purpose to support variability in the software components implementations. Typically different algorithms in the implementation are requiring different number of memory objects. **Stereotypes:** atpVariation **Tags:** atp.Splitkey=perInstanceMemory, perInstance Memory.shortName, perInstanceMemory.variation Point.shortLabel vh.latestBindingTime=preCompileTime

▽

△

Class	**SwcInternalBehavior**			
perInstance Parameter	ParameterData Prototype	*	aggr	Defines parameter(s) or characteristic value(s) that needs to be available for each instance of the software-component. This is typically only useful if supportsMultipleInstantiation is set to "true". The aggregation of perInstanceParameter is subject to variability with the purpose to support variability in the software components implementations. Typically different algorithms in the implementation are requiring different number of memory objects. **Stereotypes:** atpVariation **Tags:** atp.Splitkey=perInstanceParameter, perInstance Parameter.shortName, perInstanceParameter.variation Point.shortLabel vh.latestBindingTime=preCompileTime
portAPIOption	PortAPIOption	*	aggr	Options for generating the signature of port-related calls from a runnable to the RTE and vice versa. The aggregation of PortPrototypes is subject to variability with the purpose to support the conditional existence of ports. **Stereotypes:** atpVariation **Tags:** atp.Splitkey=portAPIOption, portAPIOption.port, port APIOption.variationPoint.shortLabel vh.latestBindingTime=preCompileTime
runnable	RunnableEntity	*	aggr	This is a `RunnableEntity` specified for the particular `SwcInternalBehavior`. The aggregation of `RunnableEntity` is subject to variability with the purpose to support the conditional existence of `RunnableEntity`s. Note: the number of `RunnableEntity`s might vary due to the conditional existence of `PortPrototype`s using `DataReceivedEvent`s or due to different scheduling needs of algorithms. **Stereotypes:** atpVariation **Tags:** atp.Splitkey=runnable, runnable.shortName, runnable.variationPoint.shortLabel vh.latestBindingTime=preCompileTime
service Dependency	SwcService Dependency	*	aggr	Defines the requirements on AUTOSAR Services for a particular item. The aggregation of SwcServiceDependency is subject to variability with the purpose to support the conditional existence of ports as well as the conditional existence of ServiceNeeds. The SwcServiceDependency owned by an SwcInternal Behavior can be located in a different physical file in order to support that SwcServiceDependency might be provided in later development steps or even by different expert domain (e.g OBD expert for Obd related Service Needs) tools. Therefore the aggregation is <<atp Splitable>>. **Stereotypes:** atpVariation **Tags:** atp.Splitkey=serviceDependency, service Dependency.shortName, serviceDependency.variation Point.shortLabel vh.latestBindingTime=preCompileTime

▽

△

Class	**SwcInternalBehavior**			
shared Parameter	ParameterData Prototype	*	aggr	Defines parameter(s) or characteristic value(s) shared between SwComponentPrototypes of the same Sw ComponentType The aggregation of sharedParameter is subject to variability with the purpose to support variability in the software components implementations. Typically different algorithms in the implementation are requiring different number of memory objects. **Stereotypes:** atpVariation **Tags:** atp.Splitkey=sharedParameter, sharedParameter.short Name, sharedParameter.variationPoint.shortLabel vh.latestBindingTime=preCompileTime
supports Multiple Instantiation	Boolean	0..1	attr	Indicate whether the corresponding software-component can be multiply instantiated on one ECU. In this case the attribute will result in an appropriate component API on programming language level (with or without instance handle).
variationPoint Proxy	VariationPointProxy	*	aggr	Proxy of a variation points in the C/C++ implementation. **Tags:** atp.Splitkey=variationPointProxy, variationPoint Proxy.shortName

Table D.59: SwcInternalBehavior

Class	**System**			
Note	The top level element of the System Description. The System description defines five major elements: Topology, Software, Communication, Mapping and Mapping Constraints. The System element directly aggregates the elements describing the Software, Mapping and Mapping Constraints; it contains a reference to an ASAM FIBEX description specifying Communication and Topology. **Tags:** atp.recommendedPackage=Systems			
Base	*ARElement*, *ARObject*, *AtpClassifier*, *AtpFeature*, *AtpStructureElement*, *CollectableElement*, *Identifiable*, *MultilanguageReferrable*, *PackageableElement*, *Referrable*, *UploadableDesignElement*, *UploadablePackageElement*			
Aggregated by	ARPackage.element, *AtpClassifier*.atpFeature			
Attribute	***Type***	***Mult.***	***Kind***	***Note***
clientId DefinitionSet	ClientIdDefinitionSet	*	ref	Set of Client Identifiers that are used for inter-ECU client-server communication in the System. **Tags:** atp.Splitkey=clientIdDefinitionSet This Attribute is only used by the AUTOSAR Classic Platform.
containerIPdu HeaderByte Order	ByteOrderEnum	0..1	attr	Defines the byteOrder of the header in ContainerIPdus. This Attribute is only used by the AUTOSAR Classic Platform.
ecuExtract Version	RevisionLabelString	0..1	attr	Version number of the Ecu Extract. This Attribute is only used by the AUTOSAR Classic Platform.

▽

△

Class	System			
fibexElement	FibexElement	*	ref	Reference to ASAM FIBEX elements specifying Communication and Topology. All Fibex Elements used within a System Description shall be referenced from the System Element. atpVariation: In order to describe a product-line, all Fibex Elements can be optional. **Stereotypes:** atpVariation **Tags:** atp.Splitkey=fibexElement, fibexElement.fibexElement, fibexElement.variationPoint.shortLabel vh.latestBindingTime=postBuild
interpolation Routine MappingSet	InterpolationRoutine MappingSet	*	ref	This reference identifies the InterpolationRoutineMapping Sets that are relevant in the context of the enclosing System. **Tags:** atp.Splitkey=interpolationRoutineMappingSet This Attribute is only used by the AUTOSAR Classic Platform.
j1939Shared AddressCluster	J1939SharedAddress Cluster	*	aggr	Collection of J1939Clusters that share a common address space for the routing of messages. **Stereotypes:** atpVariation **Tags:** atp.Splitkey=j1939SharedAddressCluster, j1939Shared AddressCluster.shortName, j1939SharedAddress Cluster.variationPoint.shortLabel vh.latestBindingTime=postBuild This Attribute is only used by the AUTOSAR Classic Platform.
mapping	SystemMapping	*	aggr	Aggregation of all mapping aspects (mapping of SW components to ECUs, mapping of data elements to signals, and mapping constraints). In order to support OEM / Tier 1 interaction and shared development for one common System this aggregation is atpSplitable and atpVariation. The content of System Mapping can be provided by several parties using different names for the SystemMapping. This element is not required when the System description is used for a network-only use-case. **Stereotypes:** atpVariation **Tags:** atp.Splitkey=mapping, mapping.shortName, mapping.variationPoint.shortLabel vh.latestBindingTime=postBuild
pncVector Length	PositiveInteger	0..1	attr	Length of the partial networking request release information vector (in bytes).
pncVectorOffset	PositiveInteger	0..1	attr	Absolute offset (with respect to the NM-PDU) of the partial networking request release information vector that is defined in bytes as an index starting with 0.

▽

△

Class	**System**			
rootSoftware Composition	RootSwComposition Prototype	0..1	aggr	Aggregation of the root software composition, containing all software components in the System in a hierarchical structure. This element is not required when the System description is used for a network-only use-case. atpVariation: The RootSwCompositionPrototype can vary. **Stereotypes:** atpVariation **Tags:** atp.Splitkey=rootSoftwareComposition, rootSoftware Composition.shortName, rootSoftware Composition.variationPoint.shortLabel vh.latestBindingTime=systemDesignTime This Attribute is only used by the AUTOSAR Classic Platform.
swCluster	CpSoftwareCluster	*	ref	CP Software Clusters of this System **Stereotypes:** atpVariation **Tags:** atp.Splitkey=swCluster, swCluster.cpSoftwareCluster, sw Cluster.variationPoint.shortLabel vh.latestBindingTime=systemDesignTime This Attribute is only used by the AUTOSAR Classic Platform.
systemCom SpecDefinition	SystemComSpec DefinitionSet	*	ref	Reference to the set of ComSpec definitions that are used for inter-ECU communication in the System. **Tags:** atp.Splitkey=systemComSpecDefinition
system Documentation	Chapter	*	aggr	Possibility to provide additional documentation while defining the System. The System documentation can be composed of several chapters. **Stereotypes:** atpVariation **Tags:** atp.Splitkey=systemDocumentation, system Documentation.shortName, system Documentation.variationPoint.shortLabel vh.latestBindingTime=systemDesignTime xml.sequenceOffset=-10 This Attribute is only used by the AUTOSAR Classic Platform.
systemVersion	RevisionLabelString	0..1	attr	Version number of the System Description.

Table D.60: System

Class	***TDEventBsw*** (abstract)			
Note	This is used to describe timing events related to BSW modules. This Class is only used by the AUTOSAR Classic Platform.			
Base	*ARObject*, *Identifiable*, *MultilanguageReferrable*, *Referrable*, *TimingDescription*, *TimingDescriptionEvent*			
Subclasses	TDEventBswModeDeclaration, TDEventBswModule			
Aggregated by	*TimingExtension*.timingDescription			
Attribute	***Type***	***Mult.***	***Kind***	***Note***
bswModule Description	BswModuleDescription	0..1	ref	The scope of this timing event. **Tags:** atp.Splitkey=bswModuleDescription

Table D.61: TDEventBsw

Class	TDEventVfbPortGroup			
Note	A TimingDescriptionEvent occuring on a heterogeneous group of TDEventVfbPort.			
Base	ARObject, Identifiable, MultilanguageReferrable, Referrable, TDEventVfb, TimingDescription, TimingDescriptionEvent			
Aggregated by	TimingExtension.timingDescription			
Attribute	**Type**	**Mult.**	**Kind**	**Note**
tdEventVfbPort	TDEventVfbPort	*	ref	Group of PortPrototypes on which the timing events shall apply **Tags:** atp.Splitkey=tdEventVfbPort

Table D.62: TDEventVfbPortGroup

Class	TDLETZoneClock			
Note	Represents a LET Zone Clock			
Base	ARObject, Identifiable, MultilanguageReferrable, Referrable, TimingClock			
Aggregated by	TimingExtension.timingClock			
Attribute	**Type**	**Mult.**	**Kind**	**Note**
accuracyExt	MultidimensionalTime	0..1	aggr	Constrains an upper-bounds for any TimingClockSyncAccuracy.accuracy plus the accuracyExt of the TDLETZoneClock, that is referenced by the TimingClockSyncAccuracy. **Tags:** atp.Splitkey=accuracyExt
accuracyInt	MultidimensionalTime	0..1	aggr	Constrains an upper-bounds for any combination of two accuracys of referenced TimingClockSyncAccuracys plus the accuracyExts of the TDLETZoneClocks, that are referenced by those TimingClockSyncAccuracys. **Tags:** atp.Splitkey=accuracyInt

Table D.63: TDLETZoneClock

Class	*TimingClock* (abstract)			
Note	Provides an abstract model of a timing extensions time base.			
Base	ARObject, Identifiable, MultilanguageReferrable, Referrable			
Subclasses	TDLETZoneClock			
Aggregated by	TimingExtension.timingClock			
Attribute	**Type**	**Mult.**	**Kind**	**Note**
platformTime Base	GlobalTimeDomain	0..1	ref	Refers to a physical time base reference on the respective platform level **Stereotypes:** atpVariation **Tags:** atp.Splitkey=platformTimeBase, platformTimeBase.global TimeDomain, platformTimeBase.variationPoint.short Label vh.latestBindingTime=postBuild

Table D.64: TimingClock

Class	TimingClockSyncAccuracy			
Note	Describes the synchronization accuracy between exactly two TDClocks.			
Base	*ARObject*, *Identifiable*, *MultilanguageReferrable*, *Referrable*			
Aggregated by	*TimingExtension*.timingClockSyncAccuracy			
Attribute	**Type**	**Mult.**	**Kind**	**Note**
accuracy	MultidimensionalTime	0..1	aggr	Synchronization accuracy, treated as zero if not given. **Tags:** atp.Splitkey=accuracy
lower	TimingClock	0..1	ref	Reference a lower level `TimingClock`, which is derived from a higher level `TimingClock`. **Tags:** atp.Splitkey=lower
upper	TimingClock	0..1	ref	Reference to a higher level `TimingClock`, from which a lower level `TimingClock` is derived. **Tags:** atp.Splitkey=upper

Table D.65: TimingClockSyncAccuracy

Class	***TimingConstraint*** (abstract)			
Note	The abstract parent class of different timing constraints supported by the Timing extension. A concrete timing constraint is used to bound the timing behavior of the model elements in its scope.			
Base	*ARObject*, *Identifiable*, *MultilanguageReferrable*, *Referrable*, *Traceable*			
Subclasses	AgeConstraint, *EventTriggeringConstraint*, ExecutionOrderConstraint, ExecutionTimeConstraint, Latency TimingConstraint, OffsetTimingConstraint, SynchronizationTimingConstraint			
Aggregated by	*TimingExtension*.timingGuarantee, *TimingExtension*.timingRequirement			
Attribute	**Type**	**Mult.**	**Kind**	**Note**
timingCondition	TimingCondition	0..1	ref	A timing condition the timing constraint depends on. In other words it specifies the condition the timing constraint holds. **Tags:** atp.Splitkey=timingCondition

Table D.66: TimingConstraint

Class	***TimingDescription*** (abstract)			
Note	The abstract parent class of the model elements that are used to define the scope of a timing constraint.			
Base	*ARObject*, *Identifiable*, *MultilanguageReferrable*, *Referrable*			
Subclasses	*TimingDescriptionEvent*, TimingDescriptionEventChain			
Aggregated by	*TimingExtension*.timingDescription			
Attribute	**Type**	**Mult.**	**Kind**	**Note**
–	–	–	–	–

Table D.67: TimingDescription

Class	***TimingDescriptionEvent*** (abstract)
Note	A timing event is the abstract representation of a specific system behavior -- that can be observed at runtime -- in the AUTOSAR specification. Timing events are used to define the scope for timing constraints. Depending on the specific scope, the view on the system, and the level of abstraction different types of events are defined. In order to avoid confusion with existing event descriptions in the AUTOSAR templates the timing specific event types use the prefix TD.
Base	*ARObject*, *Identifiable*, *MultilanguageReferrable*, *Referrable*, *TimingDescription*

▽

△

Class	**TimingDescriptionEvent** (abstract)			
Subclasses	*TDEventBsw*, TDEventBswInternalBehavior, *TDEventCom*, TDEventComplex, *TDEventSwc*, *TDEventVfb*			
Aggregated by	*TimingExtension*.timingDescription			
Attribute	**Type**	**Mult.**	**Kind**	**Note**
clockReference	TimingClock	0..1	ref	Optional reference to a clock that holds the time base for an TD event. **Tags:** atp.Splitkey=clockReference
occurrence Expression	TDEventOccurrence Expression	0..1	aggr	The occurrence expression for this `TimingDescriptionEvent` **Tags:** atp.Splitkey=occurrenceExpression

Table D.68: TimingDescriptionEvent

Class	**TimingEvent**			
Note	This event is used to start `RunnableEntity`s that shall be executed periodically.			
Base	*ARObject*, *AbstractEvent*, *AtpClassifier*, *AtpFeature*, *AtpStructureElement*, *Identifiable*, *MultilanguageReferrable*, *RTEEvent*, *Referrable*			
Aggregated by	*AtpClassifier*.atpFeature, SwcInternalBehavior.event			
Attribute	**Type**	**Mult.**	**Kind**	**Note**
offset	TimeValue	0..1	attr	The value makes an assumption about the time offset of the first activation of the `RunnableEntity` triggered by the mapped `TimingEvent` relative to the periodic activation of the time base of this `TimingEvent`. Unit: second.
period	TimeValue	0..1	attr	Period of timing event in seconds. The value of this attribute shall be greater than zero.

Table D.69: TimingEvent

Class	**TimingExtension** (abstract)			
Note	The abstract parent class of the different template specific timing extensions. Depending on the specific timing extension the timing descriptions and timing constraints, that can be used to specify the timing behavior, are restricted.			
Base	*ARElement*, *ARObject*, *CollectableElement*, *Identifiable*, *MultilanguageReferrable*, *PackageableElement*, *Referrable*			
Subclasses	BswCompositionTiming, BswModuleTiming, EcuTiming, SwcTiming, SystemTiming, VfbTiming			
Aggregated by	ARPackage.element			
Attribute	**Type**	**Mult.**	**Kind**	**Note**
timingClock	TimingClock	*	aggr	A list of abstract model Clocks. **Stereotypes:** atpVariation **Tags:** atp.Splitkey=timingClock, timingClock.shortName, timingClock.variationPoint.shortLabel vh.latestBindingTime=postBuild

▽

△

Class	***TimingExtension*** (abstract)			
timingClock SyncAccuracy	TimingClockSync Accuracy	*	aggr	A list of accuracies - which may be used to specify synchronizations from one model clock to another model clock. **Stereotypes:** atpVariation **Tags:** atp.Splitkey=timingClockSyncAccuracy, timingClockSync Accuracy.shortName, timingClockSyncAccuracy.variation Point.shortLabel vh.latestBindingTime=postBuild
timingCondition	TimingCondition	*	aggr	The timing condition specifies a specific condition. **Stereotypes:** atpVariation **Tags:** atp.Splitkey=timingCondition, timingCondition.shortName, timingCondition.variationPoint.shortLabel vh.latestBindingTime=postBuild
timing Description	TimingDescription	*	aggr	The timing descriptions that belong to a specific timing specification. In order to support different timing description variants within a timing specification, the aggregation is marked with the stereotype "atpVariation". **Stereotypes:** atpVariation **Tags:** atp.Splitkey=timingDescription, timingDescription.short Name, timingDescription.variationPoint.shortLabel vh.latestBindingTime=postBuild
timing Guarantee	TimingConstraint	*	aggr	The timing constraints that belong to a specific timing specification in the role of a timing guarantee. In order to support different timing constraint variants within a timing specification, the aggregation is marked with the stereotype "atpVariation". **Stereotypes:** atpVariation **Tags:** atp.Splitkey=timingGuarantee, timingGuarantee.short Name, timingGuarantee.variationPoint.shortLabel vh.latestBindingTime=postBuild
timing Requirement	TimingConstraint	*	aggr	The timing constraints that belong to a specific timing specification in the role of a timing requirement. In order to support different timing constraint variants within a timing specification, the aggregation is marked with the stereotype "atpVariation". **Stereotypes:** atpVariation **Tags:** atp.Splitkey=timingRequirement, timingRequirement.short Name, timingRequirement.variationPoint.shortLabel vh.latestBindingTime=postBuild
timingResource	TimingExtension Resource	0..1	aggr	The timing resource contains all instance references referred from within a timing condition formula of a timing view. **Tags:** atp.Splitkey=timingResource, timingResource.short Name

Table D.70: TimingExtension

Class	**Traceable** (abstract)			
Note	This meta class represents the ability to be subject to tracing within an AUTOSAR model. Note that it is expected that its subclasses inherit either from MultilanguageReferrable or from Identifiable. Nevertheless it also inherits from MultilanguageReferrable in order to provide a common reference target for all Traceables.			
Base	*ARObject*, *MultilanguageReferrable*, *Referrable*			
Subclasses	StructuredReq, *TimingConstraint*, TraceableTable, TraceableText			
Attribute	**Type**	**Mult.**	**Kind**	**Note**
trace	Traceable	*	ref	This association represents the ability to trace to upstream requirements / constraints. This supports for example the bottom up tracing ProjectObjectives <- MainRequirements <- Features <- RequirementSpecs <- BSW/AI **Tags:** atp.Splitkey=trace xml.sequenceOffset=20

Table D.71: Traceable

Class	**Trigger**			
Note	A trigger which is provided (i.e. released) or required (i.e. used to activate something) in the given context.			
Base	*ARObject*, *AtpClassifier*, *AtpFeature*, *AtpStructureElement*, *Identifiable*, *MultilanguageReferrable*, *Referrable*			
Aggregated by	*AtpClassifier*.atpFeature, BswModuleDescription.releasedTrigger, BswModuleDescription.requiredTrigger, ServiceInterface.trigger, TriggerInterface.trigger			
Attribute	**Type**	**Mult.**	**Kind**	**Note**
swImplPolicy	SwImplPolicyEnum	0..1	attr	This attribute, when set to value queued, allows for a queued processing of Triggers. This Attribute is only used by the AUTOSAR Classic Platform.
triggerPeriod	MultidimensionalTime	0..1	aggr	Optional definition of a period in case of a periodically (time or angle) driven external trigger. **Tags:** atp.Splitkey=triggerPeriod This Attribute is only used by the AUTOSAR Classic Platform.

Table D.72: Trigger

Class	**VariableAccess**			
Note	The presence of a `VariableAccess` implies that a `RunnableEntity` needs access to a `VariableDataPrototype`. The kind of access is specified by the role in which the class is used.			
Base	*ARObject*, *AbstractAccessPoint*, *AtpClassifier*, *AtpFeature*, *AtpStructureElement*, *Identifiable*, *MultilanguageReferrable*, *Referrable*			
Aggregated by	*AtpClassifier*.atpFeature, *ReceiverComSpec*.replaceWith, RunnableEntity.dataReadAccess, RunnableEntity.dataReceivePointByArgument, RunnableEntity.dataReceivePointByValue, RunnableEntity.dataSendPoint, RunnableEntity.dataWriteAccess, RunnableEntity.readLocalVariable, RunnableEntity.writtenLocalVariable			
Attribute	**Type**	**Mult.**	**Kind**	**Note**
accessed Variable	AutosarVariableRef	0..1	aggr	This denotes the accessed variable. **Tags:** atp.Splitkey=accessedVariable

▽

△

Class	**VariableAccess**			
scope	VariableAccessScope Enum	0..1	attr	This attribute allows for constraining the scope of the corresponding communication. For example, it possible to express whether the communication is intended to cross the boundary of an ECU or whether it is intended not to cross the boundary of a single partition.

Table D.73: VariableAccess

Class	**VariableDataPrototype**			
Note	A `VariableDataPrototype` represents a formalized generic piece of information that is typically mutable by the application software layer. `VariableDataPrototype` is used in various contexts and the specific context gives the otherwise generic `VariableDataPrototype` a dedicated semantics.			
Base	*ARObject*, *AtpFeature*, *AtpPrototype*, *AutosarDataPrototype*, *DataPrototype*, *Identifiable*, *Multilanguage Referrable*, *Referrable*			
Aggregated by	ApplicationInterface.indication, *AtpClassifier*.atpFeature, BswInternalBehavior.arTypedPerInstance Memory, BswModuleDescription.providedData, BswModuleDescription.requiredData, BulkNvData Descriptor.bulkNvBlock, DiagnosticSovdAccessArgument.contentObject, *InternalBehavior*.staticMemory, NvBlockDescriptor.ramBlock, NvDataInterface.nvData, SenderReceiverInterface.dataElement, Service Interface.event, SwcInternalBehavior.arTypedPerInstanceMemory, SwcInternalBehavior.explicitInter RunnableVariable, SwcInternalBehavior.implicitInterRunnableVariable			
Attribute	***Type***	***Mult.***	***Kind***	***Note***
initValue	ValueSpecification	0..1	aggr	Specifies initial value(s) of the VariableDataPrototype **Tags:** atp.Splitkey=initValue

Table D.74: VariableDataPrototype

E Non-splitable elements in the scope of this document

This chapter contains a table of all non-splitable model elements in the scope of this document.

For more information about the concept of splitable model elements and how these shall be processed in a tool, please refer to [9]

Name of non splitable element
EOCExecutableEntityRefGroup.nestedElement
ModeInBswInstanceRef.contextBswImplementation
ModeInBswInstanceRef.contextModeDeclarationGroupPrototype
ModeInBswInstanceRef.targetModeDeclaration
ModeInSwcInstanceRef.base
ModeInSwcInstanceRef.contextComponent
ModeInSwcInstanceRef.contextModeDeclarationGroupPrototype
ModeInSwcInstanceRef.contextPort
ModeInSwcInstanceRef.targetModeDeclaration
OperationArgumentInComponentInstanceRef.contextComponent
OperationArgumentInComponentInstanceRef.contextDataPrototype
OperationArgumentInComponentInstanceRef.contextOperation
OperationArgumentInComponentInstanceRef.contextPortPrototype
OperationArgumentInComponentInstanceRef.rootArgumentDataPrototype
OperationArgumentInComponentInstanceRef.targetDataPrototype
TDEventOccurrenceExpressionFormula.argument
TDEventOccurrenceExpressionFormula.event
TDEventOccurrenceExpressionFormula.mode
TDEventOccurrenceExpressionFormula.variable
TimingConditionFormula.timingArgument
TimingConditionFormula.timingCondition
TimingConditionFormula.timingEvent
TimingConditionFormula.timingMode
TimingConditionFormula.timingVariable
VariableInComponentInstanceRef.base
VariableInComponentInstanceRef.contextComponent
VariableInComponentInstanceRef.contextDataPrototype
VariableInComponentInstanceRef.contextPortPrototype
VariableInComponentInstanceRef.rootVariableDataPrototype
VariableInComponentInstanceRef.targetDataProtoype

Table E.1: Usage of non splitable elements

F Variation Points in the Scope of this Document

This chapter contains a table of all model elements stereotyped ≪atpVariation≫ in the scope of this document.

Each entry in the table consists of the identification of the specific model element itself and the applicable value of the tagged value vh.latestBindingTime.

For more information about the concept of variation points and how model elements that contain variation points shall be processed in a tool, please refer to [9]

Variation Point	*Latest Binding Time*
TDCpSoftwareClusterMappingSet.tdCpSoftwareClusterResourceToTdMapping	postBuild
TDCpSoftwareClusterMappingSet.tdCpSoftwareClusterToTdMapping	postBuild
TimingClock.platformTimeBase	postBuild
TimingExtension.timingClock	postBuild
TimingExtension.timingClockSyncAccuracy	postBuild
TimingExtension.timingCondition	postBuild
TimingExtension.timingDescription	postBuild
TimingExtension.timingGuarantee	postBuild
TimingExtension.timingRequirement	postBuild
TimingExtensionResource.timingArgument	postBuild
TimingExtensionResource.timingMode	postBuild
TimingExtensionResource.timingVariable	postBuild

Table F.1: Usage of variation points

G Change History

The content of this appendix chapter is *informative* in nature and shall **not** be considered as *normative* content.

This chapter provides the change history of traceable items in this document. The lists also include traceable items that have been removed from the document in a later version. These items do not appear as hyperlinks in the document.

G.1 Changes in AUTOSAR release R4.0.1

G.1.1 Added Specification Items in Release R4.0.1

none

G.1.2 Changed Specification Items in Release R4.0.1

none

G.1.3 Deleted Specification Items in Release R4.0.1

none

G.1.4 Added Constraints in Release R4.0.1

none

G.1.5 Changed Constraints in Release R4.0.1

none

G.1.6 Deleted Constraints in Release R4.0.1

none

G.2 Changes in AUTOSAR release R4.0.2

G.2.1 Added Specification Items in Release R4.0.2

none

G.2.2 Changed Specification Items in Release R4.0.2

none

G.2.3 Deleted Specification Items in Release R4.0.2

none

G.2.4 Added Constraints in Release R4.0.2

none

G.2.5 Changed Constraints in Release R4.0.2

none

G.2.6 Deleted Constraints in Release R4.0.2

none

G.3 Changes in AUTOSAR release R4.0.3

G.3.1 Added Specification Items in Release R4.0.3

Number	Heading
[TPS_TIMEX_00001]	Purpose of `TimingDescriptionEvent`
[TPS_TIMEX_00002]	Purpose of `TimingDescriptionEventChain`
[TPS_TIMEX_00003]	`EventTriggeringConstraint` specifies occurrence behavior respectively model
[TPS_TIMEX_00004]	`LatencyTimingConstraint` specifies latency constraints
[TPS_TIMEX_00005]	`AgeConstraint` to specify age constraints

[TPS_TIMEX_00006]	SynchronizationTimingConstraint specifies synchronicity constraints
[TPS_TIMEX_00007]	ExecutionOrderConstraint specifies sequence of executing executable entities
[TPS_TIMEX_00008]	ExecutionTimeConstraint to specify execution time constraints
[TPS_TIMEX_00009]	Optional use of timing extensions
[TPS_TIMEX_00010]	PeriodicEventTriggering specifies periodic occurrences of events
[TPS_TIMEX_00011]	SporadicEventTriggering specifies sporadic occurrences of events
[TPS_TIMEX_00012]	ConcretePatternEventTriggering specifies concrete pattern of occurrences of events
[TPS_TIMEX_00013]	BurstPatternEventTriggering specifies burst of occurrences of events
[TPS_TIMEX_00014]	ArbitraryEventTriggering specifies arbitrary occurrences of an event
[TPS_TIMEX_00015]	OffsetTimingConstraint specifies offset between occurrences of events
[TPS_TIMEX_00016]	Purpose of TDEventVfb
[TPS_TIMEX_00017]	TDEventVariableDataPrototype specifies events observable at sender/receiver ports
[TPS_TIMEX_00018]	TDEventOperation specifies events observable at client/server ports.
[TPS_TIMEX_00019]	TDEventModeDeclaration specifies events observable at mode ports.
[TPS_TIMEX_00020]	TDEventSwcInternalBehavior specifies observable events of runnable entities
[TPS_TIMEX_00021]	Purpose of TDEventCom
[TPS_TIMEX_00022]	TDEventISignal specifies events related to the exchange of I-Signals
[TPS_TIMEX_00023]	TDEventIPdu specifies events related to the exchange of I-PDUs
[TPS_TIMEX_00024]	TDEventFrame specifies events related to the exchange of network frames
[TPS_TIMEX_00025]	TDEventFrClusterCycleStart specifies the event related to the start of a FlexRay communication cycle
[TPS_TIMEX_00026]	TDEventTTCanCycleStart specifies the event related to the start of a TTCAN communication cycle
[TPS_TIMEX_00027]	Purpose of TDEventComplex
[TPS_TIMEX_00028]	TDEventBswInternalBehavior specifies observable events of BSW module entities
[TPS_TIMEX_00029]	Purpose of TDEventBsw
[TPS_TIMEX_00030]	TDEventBswModule specifies observable events when basic software entries are called
[TPS_TIMEX_00031]	TDEventBswModeDeclaration specifies observable events in case of BSW mode communication
[TPS_TIMEX_00032]	Purpose of VfbTiming

[TPS_TIMEX_00033]	Purpose of SwcTiming
[TPS_TIMEX_00034]	Purpose of SystemTiming
[TPS_TIMEX_00035]	Purpose of BswModuleTiming
[TPS_TIMEX_00036]	Purpose of EcuTiming
[TPS_TIMEX_00037]	TimingConstraint is a Traceable

Table G.1: Added Traceables in 4.0.3

G.3.2 Changed Specification Items in Release R4.0.3

none

G.3.3 Deleted Specification Items in Release R4.0.3

none

G.3.4 Added Constraints in Release R4.0.3

Number	Heading
[constr_4500]	Restricted usage of functions
[constr_4501]	Application rule for the occurrence expression
[constr_4502]	Use references only as function operands
[constr_4503]	Restricted usage of AutosarOperationArgumentInstance for Content Filter
[constr_4504]	Restricted usage of AgeConstraint
[constr_4505]	Specifying minimum and maximum number of occurrences
[constr_4506]	Specifying minimum inter-arrival time and pattern length
[constr_4507]	Specifying pattern length, pattern jitter and patter period

Table G.2: Added Constraints in R4.0.3

G.3.5 Changed Constraints in Release R4.0.3

none

G.3.6 Deleted Constraints in Release R4.0.3

none

G.4 Changes in AUTOSAR release R4.1.1

G.4.1 Added Specification Items in Release R4.1.1

Number	Heading
[TPS_TIMEX_00038]	Purpose of EOCExecutableEntityRefAbstract
[TPS_TIMEX_00039]	TDEventTrigger specifies events observable at trigger ports
[TPS_TIMEX_00040]	Blueprinting VfbTiming
[TPS_TIMEX_00041]	Purpose of EOCExecutableEntityRefGroup
[TPS_TIMEX_00042]	Purpose of TDEventVfbPort
[TPS_TIMEX_00043]	Purpose of TDEventVfbReference
[TPS_TIMEX_00044]	Purpose of TDEventSwc
[TPS_TIMEX_00045]	Purpose of TDEventSwcInternalBehaviorReference
[TPS_TIMEX_00046]	Purpose of EOCExecutableEntityRef

Table G.3: Added Traceables in 4.1.1

G.4.2 Changed Specification Items in Release R4.1.1

none

G.4.3 Deleted Specification Items in Release R4.1.1

none

G.4.4 Added Constraints in Release R4.1.1

Number	Heading
[constr_4508]	TDEventVfb shall reference PortPrototypeBlueprint only in Blueprints
[constr_4509]	Only VfbTiming shall be a Blueprint
[constr_4510]	Specifying references to RunnableEntity and VariableAccess
[constr_4511]	Validity of referencing RunnableEntity
[constr_4512]	Validity of referencing VariableAccess
[constr_4513]	SynchronizationTimingConstraint shall reference at least two events
[constr_4514]	SynchronizationTimingConstraint shall reference at least two event chains
[constr_4515]	Specifying stimulus and response in TimingDescriptionEventChain
[constr_4516]	Specifying event chain segments
[constr_4517]	Referencing no further event chain segments
[constr_4518]	Specifying stimulus event and response event of first and last event chain segment

[constr_4519]	Specifying patternLength
[constr_4520]	Specifying attribute synchronizationConstraintType
[constr_4521]	Specifying attribute synchronizationConstraintType
[constr_4522]	SynchronizationTimingConstraint shall either reference events or event chains
[constr_4523]	Specifying attributes EOCExecutableEntityRefGroup.maxCycles and EOCExecutableEntityRefGroup.maxSlots
[constr_4524]	Referencing TimingDescriptionEvent
[constr_4525]	Precedence of successor relationships successor and directSuccessor
[constr_4526]	Specifying EOCExecutableEntityRefGroup.maxCycles and EOCExecutableEntityRefGroup.maxSlots in a Repetitive Execution Order Constraint
[constr_4527]	Referencing TimingDescriptionEvent in a Repetitive Execution Order Constraint
[constr_4528]	The *root* EOCExecutableEntityRefGroup shall reference only EOCExecutableEntityRefGroups
[constr_4529]	Number of nested elements referenced by the *root* EOCExecutableEntityRefGroup
[constr_4530]	An EOCExecutableEntityRefGroup representing a cycle shall reference only EOCExecutableEntityRefs
[constr_4531]	Number of nested elements referenced by EOCExecutableEntityRefGroup representing a cycle

Table G.4: Added Constraints in R4.1.1

G.4.5 Changed Constraints in Release R4.1.1

Number	Heading
[constr_4504]	The AgeConstraint is no longer restricted to events of type TDEventVariableDataPrototype only. All events indicating the receipt and reading of data can be referenced by the AgeConstraint.

Table G.5: Changed Constraints in R4.1.1

G.4.6 Deleted Constraints in Release R4.1.1

none

G.5 Changes in AUTOSAR release R4.1.2

G.5.1 Added Specification Items in Release R4.1.2

none

G.5.2 Changed Specification Items in Release R4.1.2

none

G.5.3 Deleted Specification Items in Release R4.1.2

none

G.5.4 Added Constraints in Release R4.1.2

Number	Heading
[constr_4532]	Successor relationship is not self-referencing
[constr_4533]	Maximum number of successor relationships
[constr_4534]	Maximum number of `directSuccessor` relationships
[constr_4535]	Same Mode of any `ExecutableEntity`
[constr_4536]	Compatible recurrence of any `ExecutableEntity`
[constr_4537]	References among elements in an `ExecutionOrderConstraint`
[constr_4538]	Hierarchical Execution Order Constraint: `EOCExecutableEntityRef` and `EOCExecutableEntityRef` shall be target or source of a successor relationship
[constr_4539]	The successor relationships `successor` and `directSuccessor` shall not be used
[constr_4540]	`EOCExecutableEntityRefGroup.maxCycles` and `EOCExecutableEntityRefGroup.maxSlots` shall not be zero
[constr_4541]	`EOCExecutableEntityRef` shall reference `ExecutableEntity` in Ordinary Execution Order Constraint
[constr_4542]	`EOCExecutableEntityRef` shall reference `ExecutableEntity` in Hierarchical Execution Order Constraint
[constr_4543]	Maximum value of the parameter `minimumInterArrivalTime`

Table G.6: Added Constraints in R4.1.2

G.5.5 Changed Constraints in Release R4.1.2

Number	Heading
[constr_4504]	The `AgeConstraint` is no longer restricted to events of type `TDEventVariableDataPrototype` only. All events indicating the receipt and reading of data can be referenced by the `AgeConstraint`.

Table G.7: Changed Constraints in R4.1.2

G.5.6 Deleted Constraints in Release R4.1.2

none

G.6 Changes in AUTOSAR release R4.1.3

G.6.1 Added Specification Items in Release R4.1.3

none

G.6.2 Changed Specification Items in Release R4.1.3

none

G.6.3 Deleted Specification Items in Release R4.1.3

none

G.6.4 Added Constraints in Release R4.1.3

none

G.6.5 Changed Constraints in Release R4.1.3

none

G.6.6 Deleted Constraints in Release R4.1.3

none

G.7 Changes in AUTOSAR release R4.2.1

G.7.1 Added Specification Items in Release R4.2.1

Number	Heading
[TPS_TIMEX_00047]	Purpose of ExecutionOrderConstraintTypeEnum
[TPS_TIMEX_00048]	Purpose of EOCEventRef

Table G.8: Added Traceables in 4.2.1

G.7.2 Changed Specification Items in Release R4.2.1

Number	Heading
[TPS_TIMEX_00007]	Added the possibility to reference RTEEvents and BswEvents in addition to ExecutableEntitys. The optional attributes executionOrderConstraintType, isEvent and permitMultipleReferencesToEE have been specified to support consistency checking of an execution order constraint.

Table G.9: Changed Traceables in 4.2.1

G.7.3 Deleted Specification Items in Release R4.2.1

none

G.7.4 Added Constraints in Release R4.2.1

Number	Heading
[constr_4544]	Specifying patternLength, patternJitter and patternPeriod
[constr_4545]	Referring either ExecutableEntitys or AbstractEvents
[constr_4546]	Setting the attribute isEvent
[constr_4547]	Setting the attribute permitMultipleReferencesToEE
[constr_4548]	EOCEventRef shall reference AbstractEvent in Ordinary Execution Order Constraint
[constr_4549]	EOCEventRef shall reference AbstractEvent in Hierarchical Execution Order Constraint
[constr_4550]	A Hierarchical Execution Order Constraint shall have an unambiguous root EOCExecutableEntityRefGroup

Table G.10: Added Constraints in R4.2.1

G.7.5 Changed Constraints in Release R4.2.1

Number	Heading
[constr_4528]	The *root* EOCExecutableEntityRefGroup shall reference only EOCExecutableEntityRefGroups
[constr_4530]	An EOCExecutableEntityRefGroup representing a cycle shall reference only EOCExecutableEntityRefs respectively EOCEventRefs
[constr_4533]	Maximum number of successor relationships
[constr_4534]	Maximum number of directSuccessor relationships
[constr_4535]	An ExecutionOrderConstraint needs to be consistent regarding effective modes
[constr_4536]	Compatible recurrence of any ExecutableEntity
[constr_4537]	References among elements in an ExecutionOrderConstraint

Table G.11: Changed Constraints in R4.2.1

G.7.6 Deleted Constraints in Release R4.2.1

none

G.8 Changes in AUTOSAR release R4.2.2

G.8.1 Added Specification Items in Release R4.2.2

none

G.8.2 Changed Specification Items in Release R4.2.2

none

G.8.3 Deleted Specification Items in Release R4.2.2

none

G.8.4 Added Constraints in Release R4.2.2

none

G.8.5 Changed Constraints in Release R4.2.2

none

G.8.6 Deleted Constraints in Release R4.2.2

none

G.9 Changes in AUTOSAR release R4.3.0

G.9.1 Added Specification Items in Release R4.3.0

Number	Heading
[TPS_TIMEX_00049]	Purpose of `TimingCondition`
[TPS_TIMEX_00050]	Purpose of `TimingConditionFormula`
[TPS_TIMEX_00051]	Purpose of `TimingExtensionResource`
[TPS_TIMEX_00052]	Purpose of `TDEventFrameEthernet`

Table G.12: Added Traceables in 4.3.0

G.9.2 Changed Specification Items in Release R4.3.0

none

G.9.3 Added Constraints in Release R4.3.0

Number	Heading
[constr_4551]	Use only Numericals in TDEventOccurrenceExpression
[constr_4552]	Restricted usage of AutosarVariableInstance for Content Filter

Table G.13: Added Constraints in R4.3.0

G.9.4 Changed Constraints in Release R4.3.0

Number	Heading
[constr_4501]	Application rule for the occurrence expression

Table G.14: Added Constraints in R4.3.0

G.9.5 Deleted Constraints in Release R4.3.0

none

G.10 Changes in AUTOSAR release R4.3.1

G.10.1 Added Specification Items in Release R4.3.1

none

G.10.2 Changed Specification Items in Release R4.3.1

none

G.10.3 Added Constraints in Release R4.3.1

none

G.10.4 Changed Constraints in Release R4.3.1

none

G.10.5 Deleted Constraints in Release R4.3.1

none

G.11 Changes in AUTOSAR release R4.4.0

G.11.1 Added Specification Items in Release R4.4.0

Number	Heading
[TPS_TIMEX_00053]	Purpose of BswCompositionTiming
[TPS_TIMEX_00054]	Purpose of SynchronizationPointConstraint
[TPS_TIMEX_00055]	Purpose of letInterval
[TPS_TIMEX_00056]	Attribute category used in context of TimingDescriptionEvent and LET
[TPS_TIMEX_00057]	Attribute category used in context of TimingDescriptionEventChain and LET

Table G.15: Added Traceables in 4.4.0

G.11.2 Changed Specification Items in Release R4.4.0

none

G.11.3 Added Constraints in Release R4.4.0

Number	Heading
[constr_4553]	Usage of optional attribute ExecutionOrderConstraint.ignoreOrderAllowed
[constr_4554]	Usage of optional directed association/reference letInterval
[constr_4555]	Usage of the category value LET_RELEASE in TimingDescriptionEvent
[constr_4556]	Usage of the category value LET_TERMINATE in TimingDescriptionEvent
[constr_4557]	Usage of the category value LET_INTERVAL in TimingDescriptionEventChain
[constr_4558]	Applicability of LET semantics
[constr_4559]	category of TimingDescriptionEvent shall not be extended
[constr_4560]	category of TimingDescriptionEventChain shall not be extended

Table G.16: Added Constraints in R4.4.0

G.11.4 Changed Constraints in Release R4.4.0

none

G.11.5 Deleted Constraints in Release R4.4.0

Number	Heading
[constr_4535]	An ExecutionOrderConstraint needs to be consistent regarding effective modes

Table G.17: Deleted Constraints in R4.4.0

G.12 Changes in AUTOSAR release R19-11

G.12.1 Added Specification Items in Release 19-11

none

G.12.2 Changed Specification Items in Release 19-11

none

G.12.3 Added Constraints in Release 19-11

none

G.12.4 Changed Constraints in Release 19-11

none

G.12.5 Deleted Constraints in Release 19-11

none

G.13 Changes in AUTOSAR release R20-11

G.13.1 Added Specification Items in R20-11

Number	Heading
[TPS_TIMEX_00066]	Purpose of TDCpSoftwareClusterMappingSet
[TPS_TIMEX_00067]	Purpose of TDCpSoftwareClusterMapping
[TPS_TIMEX_00068]	Purpose of TDCpSoftwareClusterResourceMapping

Table G.18: Added Traceables in R20-11

G.13.2 Changed Specification Items in R20-11

none

G.13.3 Deleted Specification Items in R20-11

none

G.13.4 Added Constraints in R20-11

Number	Heading
[constr_4561]	Usage of the category value DISPATCH_ENTRY_POINT in TimingDescriptionEvent
[constr_4562]	Usage of the category value DISPATCH_EXIT_POINT in TimingDescriptionEvent
[constr_4563]	TDCpSoftwareClusterMapping shall reference only dispatcher or LET interval
[constr_4564]	TDCpSoftwareClusterResourceMapping shall reference only dispatcher or LET interval
[constr_4565]	Consistency of TDCpSoftwareClusterMapping and TDCpSoftwareClusterResourceMapping
[constr_4566]	SystemTiming describing timing of software clusters and category of System
[constr_4567]	Reference provider of TDCpSoftwareClusterMapping
[constr_4568]	Reference requestor of TDCpSoftwareClusterMapping

Table G.19: Added Constraints in R20-11

G.13.5 Changed Constraints in R20-11

none

G.13.6 Deleted Constraints in R20-11

none

G.14 Changes in AUTOSAR release R21-11

G.14.1 Added Specification Items in R21-11

Number	Heading
[TPS_TIMEX_00001]	Purpose of TimingDescriptionEvent
[TPS_TIMEX_00002]	Purpose of TimingDescriptionEventChain
[TPS_TIMEX_00003]	EventTriggeringConstraint specifies occurrence behavior respectively model
[TPS_TIMEX_00004]	LatencyTimingConstraint specifies latency constraints

▽

△

Number	Heading
[TPS_TIMEX_00005]	AgeConstraint to specify age constraints
[TPS_TIMEX_00006]	SynchronizationTimingConstraint specifies synchronicity constraints
[TPS_TIMEX_00007]	ExecutionOrderConstraint specifies sequence of executing executable entities
[TPS_TIMEX_00008]	ExecutionTimeConstraint to specify execution time constraints
[TPS_TIMEX_00009]	Optional use of timing extensions
[TPS_TIMEX_00010]	PeriodicEventTriggering specifies periodic occurrences of events
[TPS_TIMEX_00011]	SporadicEventTriggering specifies sporadic occurrences of events
[TPS_TIMEX_00012]	ConcretePatternEventTriggering specifies concrete pattern of occurrences of events
[TPS_TIMEX_00013]	BurstPatternEventTriggering specifies burst of occurrences of events
[TPS_TIMEX_00014]	ArbitraryEventTriggering specifies arbitrary occurrences of an event
[TPS_TIMEX_00015]	OffsetTimingConstraint specifies offset between occurrences of events
[TPS_TIMEX_00016]	Purpose of TDEventVfb
[TPS_TIMEX_00017]	TDEventVariableDataPrototype specifies events observable at sender/receiver ports
[TPS_TIMEX_00018]	TDEventOperation specifies events observable at client/server ports.
[TPS_TIMEX_00019]	TDEventModeDeclaration specifies events observable at mode ports.
[TPS_TIMEX_00020]	TDEventSwcInternalBehavior specifies observable events of runnable entities
[TPS_TIMEX_00021]	Purpose of TDEventCom
[TPS_TIMEX_00022]	TDEventISignal specifies events related to the exchange of I-Signals
[TPS_TIMEX_00023]	TDEventIPdu specifies events related to the exchange of I-PDUs
[TPS_TIMEX_00024]	TDEventFrame specifies events related to the exchange of network frames
[TPS_TIMEX_00025]	TDEventFrClusterCycleStart specifies the event related to the start of a FlexRay communication cycle
[TPS_TIMEX_00026]	TDEventTTCanCycleStart specifies the event related to the start of a TTCAN communication cycle
[TPS_TIMEX_00027]	Purpose of TDEventComplex
[TPS_TIMEX_00028]	TDEventBswInternalBehavior specifies observable events of BSW module entities
[TPS_TIMEX_00029]	Purpose of TDEventBsw
[TPS_TIMEX_00030]	TDEventBswModule specifies observable events when basic software entries are called
[TPS_TIMEX_00031]	TDEventBswModeDeclaration specifies observable events in case of BSW mode communication
[TPS_TIMEX_00032]	Purpose of VfbTiming
[TPS_TIMEX_00033]	Purpose of SwcTiming
[TPS_TIMEX_00034]	Purpose of SystemTiming

▽

△

Number	Heading
[TPS_TIMEX_00035]	Purpose of BswModuleTiming
[TPS_TIMEX_00036]	Purpose of EcuTiming
[TPS_TIMEX_00037]	TimingConstraint is a Traceable
[TPS_TIMEX_00038]	Purpose of EOCExecutableEntityRefAbstract
[TPS_TIMEX_00039]	TDEventTrigger specifies events observable at trigger ports
[TPS_TIMEX_00040]	Blueprinting VfbTiming
[TPS_TIMEX_00041]	Purpose of EOCExecutableEntityRefGroup
[TPS_TIMEX_00042]	Purpose of TDEventVfbPort
[TPS_TIMEX_00043]	Purpose of TDEventVfbReference
[TPS_TIMEX_00044]	Purpose of TDEventSwc
[TPS_TIMEX_00045]	Purpose of TDEventSwcInternalBehaviorReference
[TPS_TIMEX_00046]	Purpose of EOCExecutableEntityRef
[TPS_TIMEX_00047]	Purpose of ExecutionOrderConstraintTypeEnum
[TPS_TIMEX_00048]	Purpose of EOCEventRef
[TPS_TIMEX_00049]	Purpose of TimingCondition
[TPS_TIMEX_00050]	Purpose of TimingConditionFormula
[TPS_TIMEX_00051]	Purpose of TimingExtensionResource
[TPS_TIMEX_00052]	TDEventFrameEthernet specifies events related to the exchange of Ethernet frames
[TPS_TIMEX_00053]	Purpose of BswCompositionTiming
[TPS_TIMEX_00054]	SynchronizationPointConstraint explicitly specifies a synchronization point between executable entities
[TPS_TIMEX_00055]	Purpose of the attribute letInterval
[TPS_TIMEX_00056]	Attribute category used in context of TimingDescriptionEvent and LET
[TPS_TIMEX_00057]	Attribute category used in context of TimingDescriptionEventChain and LET
[TPS_TIMEX_00066]	Purpose of TDCpSoftwareClusterMappingSet
[TPS_TIMEX_00067]	Purpose of TDCpSoftwareClusterMapping
[TPS_TIMEX_00068]	Purpose of TDCpSoftwareClusterResourceMapping

Table G.20: Added Specification Items in R21-11

G.14.2 Changed Specification Items in R21-11

none

G.14.3 Deleted Specification Items in R21-11

none

G.14.4 Added Constraints in R21-11

Number	Heading
[constr_4500]	Restricted usage of functions
[constr_4501]	Application rule for the occurrence expression in TDEventComplex
[constr_4502]	Use references only as function operands
[constr_4503]	Restricted usage of AutosarOperationArgumentInstance for Content Filter
[constr_4504]	Restricted usage of AgeConstraint
[constr_4505]	Specifying minimum and maximum number of occurrences
[constr_4506]	Specifying minimum inter-arrival time and pattern length
[constr_4507]	Specifying pattern length, pattern jitter and patter period
[constr_4508]	TDEventVfb shall reference PortPrototypeBlueprint only in Blueprints
[constr_4509]	Only VfbTiming shall be a Blueprint
[constr_4510]	Specifying references to RunnableEntity and VariableAccess
[constr_4511]	Validity of referencing RunnableEntity
[constr_4512]	Validity of referencing VariableAccess
[constr_4513]	SynchronizationTimingConstraint shall reference at least two events
[constr_4514]	SynchronizationTimingConstraint shall reference at least two event chains
[constr_4515]	Specifying stimulus and response in TimingDescriptionEventChain
[constr_4516]	Specifying event chain segments
[constr_4517]	Referencing no further event chain segments
[constr_4518]	Specifying stimulus event and response event of first and last event chain segment
[constr_4519]	Specifying patternLength
[constr_4520]	Specifying attribute synchronizationConstraintType
[constr_4521]	Specifying attribute synchronizationConstraintType
[constr_4522]	SynchronizationTimingConstraint shall either reference events or event chains
[constr_4523]	Specifying attributes maxCycles and maxSlots
[constr_4524]	Referencing TimingDescriptionEvent
[constr_4525]	Precedence of successor relationships successor and directSuccessor
[constr_4526]	Specifying maxCycles and maxSlots in a Repetitive Execution Order Constraint
[constr_4527]	Referencing TimingDescriptionEvent in a Repetitive Execution Order Constraint
[constr_4528]	The *root* EOCExecutableEntityRefGroup shall reference only EOCExecutableEntityRefGroups
[constr_4529]	Number of nested elements referenced by the *root* EOCExecutableEntityRefGroup
[constr_4530]	An EOCExecutableEntityRefGroup representing a cycle shall reference only EOCExecutableEntityRefs respectively EOCEventRefs



△

Number	Heading
[constr_4531]	Number of nested elements referenced by EOCExecutableEntityRefGroup representing a cycle
[constr_4532]	Successor relationship is not self-referencing
[constr_4533]	Maximum number of successor relationships
[constr_4534]	Maximum number of directSuccessor relationships
[constr_4536]	Compatible recurrence of any ExecutableEntity
[constr_4537]	References among elements in an ExecutionOrderConstraint
[constr_4538]	Hierarchical Execution Order Constraint: EOCExecutableEntityRef, EOCEventRef, and EOCExecutableEntityRefGroup shall be target or source of a successor relationship
[constr_4539]	The successor relationships successor and directSuccessor shall not be used
[constr_4540]	maxCycles and maxSlots shall not be zero
[constr_4541]	EOCExecutableEntityRef shall reference ExecutableEntity in Ordinary Execution Order Constraint
[constr_4542]	EOCExecutableEntityRef shall reference ExecutableEntity in Hierarchical Execution Order Constraint
[constr_4543]	Maximum value of the parameter minimumInterArrivalTime
[constr_4544]	Specifying patternLength, patternJitter and patternPeriod
[constr_4545]	Referring either ExecutableEntitys or AbstractEvents
[constr_4546]	Setting the attribute isEvent
[constr_4547]	Setting the attribute permitMultipleReferencesToEE
[constr_4548]	EOCEventRef shall reference AbstractEvent in Ordinary Execution Order Constraint
[constr_4549]	EOCEventRef shall reference AbstractEvent in Hierarchical Execution Order Constraint
[constr_4550]	A Hierarchical Execution Order Constraint shall have an unambiguous root EOCExecutableEntityRefGroup
[constr_4551]	Use only Numericals in TDEventOccurrenceExpression
[constr_4552]	Restricted usage of AutosarVariableInstance for Content Filter
[constr_4553]	Usage of optional attribute ignoreOrderAllowed
[constr_4554]	Usage of optional directed association/reference letInterval
[constr_4555]	Usage of the category value LET_RELEASE in TimingDescriptionEvent
[constr_4556]	Usage of the category value LET_TERMINATE in TimingDescriptionEvent
[constr_4557]	Usage of the category value LET_INTERVAL in TimingDescriptionEventChain
[constr_4558]	Applicability of LET semantics
[constr_4559]	category of TimingDescriptionEvent shall not be extended
[constr_4560]	category of TimingDescriptionEventChain shall not be extended
[constr_4561]	Usage of the category value DISPATCH_ENTRY_POINT in TimingDescriptionEvent
[constr_4562]	Usage of the category value DISPATCH_EXIT_POINT in TimingDescriptionEvent

▽

△

Number	Heading
[constr_4563]	TDCpSoftwareClusterMapping shall reference only dispatchers or LET intervals
[constr_4564]	TDCpSoftwareClusterResourceMapping shall reference only dispatchers or LET intervals
[constr_4565]	Consistency of TDCpSoftwareClusterMapping and TDCpSoftwareClusterResourceMapping
[constr_4566]	SystemTiming describing timing of software clusters and category of System
[constr_4567]	Reference provider of TDCpSoftwareClusterMapping
[constr_4568]	Reference requestor of TDCpSoftwareClusterMapping

Table G.21: Added Constraints in R21-11

G.14.5 Changed Constraints in R21-11

none

G.14.6 Deleted Constraints in R21-11

none

G.15 Changes in AUTOSAR release R22-11

G.15.1 Added Specification Items in R22-11

Number	Heading
[TPS_TIMEX_00100]	Optionality of accuracyInt
[TPS_TIMEX_00101]	Semantics of accuracyInt
[TPS_TIMEX_00102]	Optionality of LatencyTimingConstraint.minimum used in an LET interval
[TPS_TIMEX_00103]	Optionality of accuracyExt
[TPS_TIMEX_00104]	Semantics of accuracyExt
[TPS_TIMEX_00105]	Purpose of TimingClockSyncAccuracy
[TPS_TIMEX_00106]	Purpose of TimingClockSyncAccuracy.upper
[TPS_TIMEX_00107]	Purpose of TimingClockSyncAccuracy.lower
[TPS_TIMEX_00108]	Usage of the attribute accuracy of TimingClockSyncAccuracy
[TPS_TIMEX_00109]	Optionality of accuracy
[TPS_TIMEX_00110]	Standardized categorys of TimingDescriptionEventChain
[TPS_TIMEX_00111]	Semantics of TimingDescriptionEventChain.stimulus

▽

△

Number	Heading
[TPS_TIMEX_00112]	Representation of an LET interval `release`
[TPS_TIMEX_00113]	Representation of an LET interval `terminate`
[TPS_TIMEX_00114]	Semantics of `TimingDescriptionEventChain.response`
[TPS_TIMEX_00115]	Representation of an SL-LET interval `release`
[TPS_TIMEX_00116]	Representation of an SL-LET interval `terminate`
[TPS_TIMEX_00117]	Representation of the *recurrence* of an LET interval
[TPS_TIMEX_00118]	Usage of `TimingClock.platformTimeBase`
[TPS_TIMEX_00119]	Purpose of `TDLETZoneClock`
[TPS_TIMEX_00120]	Purpose of `TDEventSLLET`
[TPS_TIMEX_00121]	Representation of the *duration* of an LET interval
[TPS_TIMEX_00122]	Application of a `PeriodicEventTriggering` constraint used to specify the *recurrence* of an LET interval
[TPS_TIMEX_00123]	Purpose of `TimingClock`
[TPS_TIMEX_00124]	Purpose of `TDEventSLLETPort`
[TPS_TIMEX_00125]	Representation of an SL-LET interval in a `TimingDescriptionEventChain`
[TPS_TIMEX_00126]	Representation of an SL-LET interval in a `TimingDescriptionEvent`

Table G.22: Added Specification Items in R22-11

G.15.2 Changed Specification Items in R22-11

Number	Heading
[TPS_TIMEX_00056]	Standardized `category`s of `TimingDescriptionEvent` in Classic Platform

Table G.23: Changed Specification Items in R22-11

G.15.3 Deleted Specification Items in R22-11

none

G.15.4 Added Constraints in R22-11

Number	Heading
[constr_6816]	Restricted usage of `TimingDescriptionEventChain.isPipeliningPermitted` in `TimingDescriptionEventChain`

▽

△

Number	Heading
[constr_6817]	Restricted usage of TimingDescriptionEvent.clockReference
[constr_6818]	Multiplicity of EventTriggeringConstraint.event
[constr_6819]	Multiplicity of PeriodicEventTriggering.jitter
[constr_6820]	Multiplicity of PeriodicEventTriggering.minimumInterArrivalTime
[constr_6821]	Multiplicity of PeriodicEventTriggering.period
[constr_6822]	Multiplicity of SporadicEventTriggering.maximumInterArrivalTime
[constr_6823]	Multiplicity of SporadicEventTriggering.minimumInterArrivalTime
[constr_6824]	Multiplicity of ConcretePatternEventTriggering.patternLength
[constr_6825]	Multiplicity of BurstPatternEventTriggering.maxNumberOfOccurrences
[constr_6826]	Multiplicity of BurstPatternEventTriggering.minimumInterArrivalTime
[constr_6827]	Multiplicity of BurstPatternEventTriggering.patternLength
[constr_6828]	Multiplicity of ArbitraryEventTriggering.minimumDistance
[constr_6829]	Multiplicity of ArbitraryEventTriggering.maximumDistance
[constr_6830]	Multiplicity of ConfidenceInterval.lowerBound
[constr_6831]	Multiplicity of ConfidenceInterval.propability
[constr_6832]	Multiplicity of ConfidenceInterval.upperBound
[constr_6833]	Multiplicity of ExecutionOrderConstraint.orderedElement
[constr_6834]	Multiplicity of EOCExecutableEntityRefGroup.nestedElement
[constr_6835]	Multiplicity of ExecutionTimeConstraint.executionTimeType
[constr_6836]	Multiplicity of ExecutionTimeConstraint.executable
[constr_6837]	Multiplicity of LatencyTimingConstraint.latencyConstraintType
[constr_6838]	Multiplicity of LatencyTimingConstraint.maximum
[constr_6839]	Multiplicity of LatencyTimingConstraint.minimum
[constr_6840]	Multiplicity of LatencyTimingConstraint.nominal
[constr_6841]	Multiplicity of LatencyTimingConstraint.scope
[constr_6842]	Multiplicity of OffsetTimingConstraint.maximum
[constr_6843]	Multiplicity of OffsetTimingConstraint.minimum
[constr_6844]	Multiplicity of OffsetTimingConstraint.source
[constr_6845]	Multiplicity of OffsetTimingConstraint.target
[constr_6846]	Multiplicity of SynchronizationTimingConstraint.synchronizationConstraintType
[constr_6847]	Multiplicity of SynchronizationTimingConstraint.tolerance
[constr_6848]	Multiplicity of VfbTiming.component
[constr_6849]	Multiplicity of SystemTiming.system
[constr_6850]	Multiplicity of BswModuleTiming.behavior
[constr_6851]	Multiplicity of BswCompositionTiming.implementation
[constr_6852]	Multiplicity of EcuTiming.ecuConfiguration
[constr_6853]	Multiplicity of ModeInBswInstanceRef.contextModeDeclarationGroupPrototype

▽

△

Number	Heading
[constr_6854]	Multiplicity of ModeInBswInstanceRef.targetModeDeclaration
[constr_6855]	Multiplicity of ModeInSwcInstanceRef.contextModeDeclarationGroupPrototype
[constr_6856]	Multiplicity of ModeInSwcInstanceRef.contextPort
[constr_6857]	Multiplicity of ModeInSwcInstanceRef.targetModeDeclaration
[constr_6858]	Multiplicity of TDEventBswInternalBehavior.tdEventBswInternalBehaviorType
[constr_6859]	Multiplicity of TDEventBswInternalBehavior.bswModuleEntity
[constr_6860]	Multiplicity of TDEventBswModule.tdEventBswModuleType
[constr_6861]	Multiplicity of TDEventBswModule.bswModuleEntry
[constr_6862]	Multiplicity of TDEventBswModeDeclaration.tdEventBswModeDeclarationType
[constr_6863]	Multiplicity of TDEventBswModeDeclaration.modeDeclaration
[constr_6864]	Multiplicity of TDEventISignal.tdEventType
[constr_6865]	Multiplicity of TDEventISignal.iSignal
[constr_6866]	Multiplicity of TDEventISignal.physicalChannel
[constr_6867]	Multiplicity of TDEventIPdu.tdEventType
[constr_6868]	Multiplicity of TDEventIPdu.iPdu
[constr_6869]	Multiplicity of TDEventIPdu.physicalChannel
[constr_6870]	Multiplicity of TDEventFrame.tdEventType
[constr_6871]	Multiplicity of TDEventFrame.frame
[constr_6872]	Multiplicity of TDEventFrame.physicalChannel
[constr_6873]	Multiplicity of TDEventFrameEthernet.tdEventType
[constr_6874]	Multiplicity of TDHeaderIdRange.maxHeaderId
[constr_6875]	Multiplicity of TDHeaderIdRange.minHeaderId
[constr_6876]	Multiplicity of TDEventCycleStart.cycleRepetition
[constr_6877]	Multiplicity of TDEventFrClusterCycleStart.frCluster
[constr_6878]	Multiplicity of TDEventTTCanCycleStart.ttCanCluster
[constr_6879]	Multiplicity of TDEventOccurrenceExpression.formula
[constr_6880]	Multiplicity of AutosarVariableInstance.variableInstance
[constr_6881]	Multiplicity of AutosarOperationArgumentInstance.operationArgumentInstance
[constr_6882]	Multiplicity of TDEventSwcInternalBehavior.tdEventSwcInternalBehaviorType
[constr_6883]	Multiplicity of TDEventSwcInternalBehavior.runnable
[constr_6884]	Multiplicity of TDEventSwcInternalBehaviorReference.referencedTDEventSwc
[constr_6885]	Multiplicity of TDEventVfbPort.isExternal
[constr_6886]	Multiplicity of TDEventVfbReference.referencedTDEventVfb

▽

△

Number	Heading
[constr_6887]	Multiplicity of TDEventVariableDataPrototype.tdEventVariableDataPrototypeType
[constr_6888]	Multiplicity of TDEventVariableDataPrototype.dataElement
[constr_6889]	Multiplicity of TDEventOperation.tdEventOperationType
[constr_6890]	Multiplicity of TDEventOperation.operation
[constr_6891]	Multiplicity of TDEventModeDeclaration.tdEventModeDeclarationType
[constr_6892]	Multiplicity of TDEventModeDeclaration.modeDeclaration
[constr_6893]	Multiplicity of TDEventTrigger.tdEventTriggerType
[constr_6894]	Multiplicity of TDEventTrigger.trigger
[constr_6895]	Multiplicity of TimingDescriptionEventChain.response
[constr_6896]	Multiplicity of TimingDescriptionEventChain.stimulus
[constr_6897]	Multiplicity of TimingDescriptionEventChain.segment
[constr_6898]	Multiplicity of ConcretePatternEventTriggering.offset
[constr_6899]	Multiplicity of ModeInSwcInstanceRef.base

Table G.24: Added Constraints in R22-11

G.15.5 Changed Constraints in R22-11

Number	Heading
[constr_4559]	Restriction of TimingDescriptionEvent.category
[constr_4560]	Restriction of TimingDescriptionEventChain.category

Table G.25: Changed Constraints in R22-11

G.15.6 Deleted Constraints in R22-11

none

G.16 Changes in AUTOSAR release R23-11

G.16.1 Added Specification Items in R23-11

Number	Heading
[TPS_TIMEX_00127]	SystemTiming of classic platform software clusters
[TPS_TIMEX_00128]	Default letDataExchangeParadigm

▽

△

Number	Heading
[TPS_TIMEX_00129]	Representation of the root in a Hierarchical Execution Order Constraint

Table G.26: Added Specification Items in R23-11

G.16.2 Changed Specification Items in R23-11

Number	Heading
[TPS_TIMEX_00005]	Semantics of an AgeConstraint
[TPS_TIMEX_00009]	Optionality of Timing Extensions
[TPS_TIMEX_00066]	Purpose of TDCpSoftwareClusterMappingSet
[TPS_TIMEX_00067]	Purpose of TDCpSoftwareClusterMapping
[TPS_TIMEX_00068]	Purpose of TDCpSoftwareClusterResourceMapping
[TPS_TIMEX_00115]	Representation of an SL-LET interval release
[TPS_TIMEX_00116]	Representation of an SL-LET interval terminate

Table G.27: Changed Specification Items in R23-11

G.16.3 Deleted Specification Items in R23-11

Number	Heading
[TPS_TIMEX_00037]	TimingConstraint is a Traceable
[TPS_TIMEX_00040]	Blueprinting VfbTiming
[TPS_TIMEX_00126]	Representation of an SL-LET interval in a TimingDescriptionEvent

Table G.28: Deleted Specification Items in R23-11

G.16.4 Added Constraints in R23-11

Number	Heading
[constr_6900]	Dual existence of TDEventVfb.port and TDEventVfb.portPrototypeBlueprint
[constr_6901]	Multiplicity of TDEventBsw.bswModuleDescription
[constr_6906]	Conformity of stimulus and response in a TimingDescriptionEventChain
[constr_6907]	Restriction of EOCExecutableEntityRefGroup.triggeringEvent
[constr_6908]	Restriction of EOCExecutableEntityRefGroup.letDataExchangeParadigm
[constr_6909]	Singleton ROOT_GROUP in a Hierarchical Execution Order Constraint

▽

△

Number	Heading
[constr_6910]	Referencing **from** a ROOT_GROUP in a Hierarchical Execution Order Constraint
[constr_6911]	Referencing **to** a ROOT_GROUP in a Hierarchical Execution Order Constraint
[constr_6912]	Mandatory specification of LET interval **recurrence**
[constr_6913]	Restriction on RTEEvents used in an LET interval
[constr_6914]	Restriction of the port context of an AgeConstraint
[constr_6915]	Affinity of ISignal in TDEventISignal
[constr_6916]	Affinity of Frame in TDEventFrame
[constr_6917]	Affinity of IPdu in TDEventIPdu

Table G.29: Added Constraints in R23-11

G.16.5 Changed Constraints in R23-11

Number	Heading
[constr_4504]	Restriction of the scope of an AgeConstraint
[constr_4508]	Multiplicity of TDEventVfbPort.portPrototypeBlueprint
[constr_4523]	Restriction of maxCycleRepetitions and maxSlotsPerCycle to Repetitive Execution Order Constraint
[constr_4547]	Restriction of ExecutionOrderConstraint.permitMultipleReferencesToEE
[constr_4554]	Restriction of the referenced TimingDescriptionEventChain for a letInterval
[constr_4561]	Usage of the category value DISPATCH_ENTRY_POINT in TimingDescriptionEvent
[constr_4562]	Usage of the category value DISPATCH_EXIT_POINT in TimingDescriptionEvent
[constr_4563]	TDCpSoftwareClusterMapping shall reference only dispatchers or LET intervals
[constr_4564]	TDCpSoftwareClusterResourceMapping shall reference only dispatchers or LET intervals
[constr_4565]	Consistency of TDCpSoftwareClusterMapping and TDCpSoftwareClusterResourceMapping
[constr_4567]	Reference provider of TDCpSoftwareClusterMapping
[constr_4568]	Reference requestor of TDCpSoftwareClusterMapping

Table G.30: Changed Constraints in R23-11

G.16.6 Deleted Constraints in R23-11

Number	Heading
[constr_4501]	Application rule for the occurrence expression in `TDEventComplex`
[constr_4509]	Only `VfbTiming` shall be a Blueprint
[constr_4524]	Referencing `TimingDescriptionEvent`
[constr_4553]	Usage of optional attribute `ignoreOrderAllowed`
[constr_4555]	Usage of the category value `LET_RELEASE` in `TimingDescriptionEvent`
[constr_4556]	Usage of the category value `LET_TERMINATE` in `TimingDescriptionEvent`
[constr_4557]	Usage of the category value `LET_INTERVAL` in `TimingDescriptionEventChain`
[constr_4558]	Applicability of LET semantics
[constr_4566]	`SystemTiming` describing timing of software clusters and category of `System`
[constr_6840]	Multiplicity of `LatencyTimingConstraint.nominal`

Table G.31: Deleted Constraints in R23-11

G.17 Changes in AUTOSAR release R24-11

G.17.1 Added Specification Items in R24-11

none

G.17.2 Changed Specification Items in R24-11

Number	Heading
[TPS_TIMEX_00056]	Standardized `category`s of `TimingDescriptionEvent` in Classic Platform
[TPS_TIMEX_00115]	Representation of an SL-LET interval `release`
[TPS_TIMEX_00116]	Representation of an SL-LET interval `terminate`

Table G.32: Changed Specification Items in R24-11

G.17.3 Deleted Specification Items in R24-11

Number	Heading
[TPS_TIMEX_00005]	Semantics of an `AgeConstraint`
[TPS_TIMEX_00038]	Purpose of `EOCExecutableEntityRefAbstract`
[TPS_TIMEX_00041]	Purpose of `EOCExecutableEntityRefGroup`

▽

△

Number	Heading
[TPS_TIMEX_00046]	Purpose of EOCExecutableEntityRef
[TPS_TIMEX_00047]	Purpose of ExecutionOrderConstraintTypeEnum
[TPS_TIMEX_00048]	Purpose of EOCEventRef
[TPS_TIMEX_00055]	Purpose of the attribute letInterval
[TPS_TIMEX_00066]	Purpose of TDCpSoftwareClusterMappingSet
[TPS_TIMEX_00067]	Purpose of TDCpSoftwareClusterMapping
[TPS_TIMEX_00068]	Purpose of TDCpSoftwareClusterResourceMapping
[TPS_TIMEX_00101]	Semantics of accuracyInt
[TPS_TIMEX_00102]	Optionality of LatencyTimingConstraint.minimum used in an LET interval
[TPS_TIMEX_00104]	Semantics of accuracyExt
[TPS_TIMEX_00105]	Purpose of TimingClockSyncAccuracy
[TPS_TIMEX_00106]	Purpose of TimingClockSyncAccuracy.upper
[TPS_TIMEX_00107]	Purpose of TimingClockSyncAccuracy.lower
[TPS_TIMEX_00109]	Optionality of accuracy
[TPS_TIMEX_00118]	Usage of TimingClock.platformTimeBase
[TPS_TIMEX_00119]	Purpose of TDLETZoneClock
[TPS_TIMEX_00120]	Purpose of TDEventSLLET
[TPS_TIMEX_00123]	Purpose of TimingClock
[TPS_TIMEX_00124]	Purpose of TDEventSLLETPort

Table G.33: Deleted Specification Items in R24-11

G.17.4 Added Constraints in R24-11

Number	Heading
[constr_6918]	Referenced TimingDescriptions in TDCpSoftwareClusterMapping and TDCpSoftwareClusterResourceMapping
[constr_6919]	Referenced CpSoftwareCluster of TDCpSoftwareClusterMapping
[constr_6920]	Multiplicity of LatencyTimingConstraint.minimum used in an LET interval
[constr_6921]	Disallow TimingDescriptionEventChain segmental circular-referencing

Table G.34: Added Constraints in R24-11

G.17.5 Changed Constraints in R24-11

Number	Heading
[constr_4500]	Restricted usage of Occurence Expression functions
[constr_4502]	Use references only as function operands
[constr_4503]	Restricted usage of `AutosarOperationArgumentInstance` for Content Filter
[constr_4504]	Restriction of the `scope` of an `AgeConstraint`
[constr_4505]	Specifying minimum and maximum number of occurrences
[constr_4506]	Specifying minimum inter-arrival time and pattern length
[constr_4507]	Specifying pattern length, pattern jitter and patter period
[constr_4508]	Multiplicity of `TDEventVfbPort.portPrototypeBlueprint`
[constr_4510]	Specifying references to `RunnableEntity` and `VariableAccess`
[constr_4511]	Validity of referencing `RunnableEntity`
[constr_4512]	Validity of referencing `VariableAccess`
[constr_4513]	`SynchronizationTimingConstraint` shall reference at least two events
[constr_4514]	`SynchronizationTimingConstraint` shall reference at least two event chains
[constr_4515]	Orthogonality of `stimulus` and `response` in a `TimingDescriptionEventChain`
[constr_4516]	Completeness of a composed `TimingDescriptionEventChain`
[constr_4518]	Specifying end-points of a composed `TimingDescriptionEventChain`
[constr_4519]	Specifying `patternLength`
[constr_4520]	Specifying attribute `synchronizationConstraintType`
[constr_4521]	Specifying attribute `synchronizationConstraintType`
[constr_4522]	`SynchronizationTimingConstraint` shall either reference events or event chains
[constr_4523]	Restriction of `maxCycleRepetitions` and `maxSlotsPerCycle` to Repetitive Execution Order Constraint
[constr_4525]	Precedence of successor relationships `successor` and `directSuccessor`
[constr_4526]	Specifying `maxCycles` and `maxSlots` in a Repetitive Execution Order Constraint
[constr_4527]	Referencing `TimingDescriptionEvent` in a Repetitive Execution Order Constraint
[constr_4528]	The *root* `EOCExecutableEntityRefGroup` shall reference only `EOCExecutableEntityRefGroup`s
[constr_4529]	Number of nested elements referenced by the *root* `EOCExecutableEntityRefGroup`
[constr_4530]	An `EOCExecutableEntityRefGroup` representing a cycle shall reference only `EOCExecutableEntityRef`s respectively `EOCEventRef`s
[constr_4531]	Number of nested elements referenced by `EOCExecutableEntityRefGroup` representing a cycle
[constr_4532]	Successor relationship is not self-referencing
[constr_4533]	Maximum number of successor relationships

△

Number	Heading
[constr_4534]	Maximum number of directSuccessor relationships
[constr_4536]	Compatible recurrence of any ExecutableEntity
[constr_4537]	References among elements in an ExecutionOrderConstraint
[constr_4538]	Hierarchical Execution Order Constraint: EOCExecutableEntityRef, EOCEventRef, and EOCExecutableEntityRefGroup shall be target or source of a successor relationship
[constr_4539]	The successor relationships successor and directSuccessor shall not be used
[constr_4540]	maxCycles and maxSlots shall not be zero
[constr_4541]	Multiplicity of EOCExecutableEntityRef.executable in an Ordinary Execution Order Constraint
[constr_4542]	Multiplicity of EOCExecutableEntityRef.executable in a Hierarchical Execution Order Constraint
[constr_4543]	Maximum value of minimumInterArrivalTime
[constr_4544]	Specifying patternLength, patternJitter and patternPeriod
[constr_4545]	Referring either ExecutableEntitys or AbstractEvents
[constr_4546]	Setting the attribute isEvent
[constr_4547]	Restriction of ExecutionOrderConstraint.permitMultipleReferencesToEE
[constr_4548]	Multiplicity of EOCEventRef.event in an Ordinary Execution Order Constraint
[constr_4549]	Multiplicity of EOCEventRef.event in a Hierarchical Execution Order Constraint
[constr_4551]	Use only Numericals in TDEventOccurrenceExpression
[constr_4552]	Restricted usage of AutosarVariableInstance for Content Filter
[constr_4554]	Restriction of the referenced TimingDescriptionEventChain for a letInterval
[constr_4559]	Restriction of TimingDescriptionEvent.category
[constr_4561]	Usage of the category value DISPATCH_ENTRY_POINT in TimingDescriptionEvent
[constr_4562]	Usage of the category value DISPATCH_EXIT_POINT in TimingDescriptionEvent
[constr_4565]	Consistency of TDCpSoftwareClusterMapping.timingDescription and TDCpSoftwareClusterResourceMapping.timingDescription
[constr_6816]	Restricted usage of TimingDescriptionEventChain.isPipeliningPermitted in TimingDescriptionEventChain
[constr_6817]	Restricted usage of TimingDescriptionEvent.clockReference
[constr_6818]	Multiplicity of EventTriggeringConstraint.event
[constr_6819]	Multiplicity of PeriodicEventTriggering.jitter
[constr_6820]	Multiplicity of PeriodicEventTriggering.minimumInterArrivalTime
[constr_6821]	Multiplicity of PeriodicEventTriggering.period
[constr_6822]	Multiplicity of SporadicEventTriggering.maximumInterArrivalTime
[constr_6823]	Multiplicity of SporadicEventTriggering.minimumInterArrivalTime

▽

△

Number	Heading
[constr_6824]	Multiplicity of ConcretePatternEventTriggering.patternLength
[constr_6825]	Multiplicity of BurstPatternEventTriggering.maxNumberOfOccurrences
[constr_6826]	Multiplicity of BurstPatternEventTriggering.minimumInterArrivalTime
[constr_6827]	Multiplicity of BurstPatternEventTriggering.patternLength
[constr_6828]	Multiplicity of ArbitraryEventTriggering.minimumDistance
[constr_6829]	Multiplicity of ArbitraryEventTriggering.maximumDistance
[constr_6830]	Multiplicity of ConfidenceInterval.lowerBound
[constr_6831]	Multiplicity of ConfidenceInterval.propability
[constr_6832]	Multiplicity of ConfidenceInterval.upperBound
[constr_6833]	Multiplicity of ExecutionOrderConstraint.orderedElement
[constr_6834]	Multiplicity of EOCExecutableEntityRefGroup.nestedElement
[constr_6835]	Multiplicity of ExecutionTimeConstraint.executionTimeType
[constr_6836]	Multiplicity of ExecutionTimeConstraint.executable
[constr_6837]	Multiplicity of LatencyTimingConstraint.latencyConstraintType
[constr_6838]	Multiplicity of LatencyTimingConstraint.maximum
[constr_6839]	Multiplicity of LatencyTimingConstraint.minimum
[constr_6841]	Multiplicity of LatencyTimingConstraint.scope
[constr_6842]	Multiplicity of OffsetTimingConstraint.maximum
[constr_6843]	Multiplicity of OffsetTimingConstraint.minimum
[constr_6844]	Multiplicity of OffsetTimingConstraint.source
[constr_6845]	Multiplicity of OffsetTimingConstraint.target
[constr_6846]	Multiplicity of SynchronizationTimingConstraint.synchronizationConstraintType
[constr_6847]	Multiplicity of SynchronizationTimingConstraint.tolerance
[constr_6848]	Multiplicity of VfbTiming.component
[constr_6849]	Multiplicity of SystemTiming.system
[constr_6850]	Multiplicity of BswModuleTiming.behavior
[constr_6851]	Multiplicity of BswCompositionTiming.implementation
[constr_6852]	Multiplicity of EcuTiming.ecuConfiguration
[constr_6853]	Multiplicity of ModeInBswInstanceRef.contextModeDeclarationGroupPrototype
[constr_6854]	Multiplicity of ModeInBswInstanceRef.targetModeDeclaration
[constr_6855]	Multiplicity of ModeInSwcInstanceRef.contextModeDeclarationGroupPrototype
[constr_6856]	Multiplicity of ModeInSwcInstanceRef.contextPort
[constr_6857]	Multiplicity of ModeInSwcInstanceRef.targetModeDeclaration
[constr_6858]	Multiplicity of TDEventBswInternalBehavior.tdEventBswInternalBehaviorType
[constr_6859]	Multiplicity of TDEventBswInternalBehavior.bswModuleEntity

▽

△

Number	Heading
[constr_6860]	Multiplicity of TDEventBswModule.tdEventBswModuleType
[constr_6861]	Multiplicity of TDEventBswModule.bswModuleEntry
[constr_6862]	Multiplicity of TDEventBswModeDeclaration.tdEventBswModeDeclarationType
[constr_6863]	Multiplicity of TDEventBswModeDeclaration.modeDeclaration
[constr_6864]	Multiplicity of TDEventISignal.tdEventType
[constr_6865]	Multiplicity of TDEventISignal.iSignal
[constr_6866]	Multiplicity of TDEventISignal.physicalChannel
[constr_6867]	Multiplicity of TDEventIPdu.tdEventType
[constr_6868]	Multiplicity of TDEventIPdu.iPdu
[constr_6869]	Multiplicity of TDEventIPdu.physicalChannel
[constr_6870]	Multiplicity of TDEventFrame.tdEventType
[constr_6871]	Multiplicity of TDEventFrame.frame
[constr_6872]	Multiplicity of TDEventFrame.physicalChannel
[constr_6873]	Multiplicity of TDEventFrameEthernet.tdEventType
[constr_6874]	Multiplicity of TDHeaderIdRange.maxHeaderId
[constr_6875]	Multiplicity of TDHeaderIdRange.minHeaderId
[constr_6876]	Multiplicity of TDEventCycleStart.cycleRepetition
[constr_6877]	Multiplicity of TDEventFrClusterCycleStart.frCluster
[constr_6878]	Multiplicity of TDEventTTCanCycleStart.ttCanCluster
[constr_6879]	Multiplicity of TDEventOccurrenceExpression.formula
[constr_6880]	Multiplicity of AutosarVariableInstance.variableInstance
[constr_6881]	Multiplicity of AutosarOperationArgumentInstance.operationArgumentInstance
[constr_6882]	Multiplicity of TDEventSwcInternalBehavior.tdEventSwcInternalBehaviorType
[constr_6883]	Multiplicity of TDEventSwcInternalBehavior.runnable
[constr_6884]	Multiplicity of TDEventSwcInternalBehaviorReference.referencedTDEventSwc
[constr_6885]	Multiplicity of TDEventVfbPort.isExternal
[constr_6886]	Multiplicity of TDEventVfbReference.referencedTDEventVfb
[constr_6887]	Multiplicity of TDEventVariableDataPrototype.tdEventVariableDataPrototypeType
[constr_6888]	Multiplicity of TDEventVariableDataPrototype.dataElement
[constr_6889]	Multiplicity of TDEventOperation.tdEventOperationType
[constr_6890]	Multiplicity of TDEventOperation.operation
[constr_6891]	Multiplicity of TDEventModeDeclaration.tdEventModeDeclarationType
[constr_6892]	Multiplicity of TDEventModeDeclaration.modeDeclaration
[constr_6893]	Multiplicity of TDEventTrigger.tdEventTriggerType
[constr_6894]	Multiplicity of TDEventTrigger.trigger

▽

△

Number	Heading
[constr_6895]	Multiplicity of TimingDescriptionEventChain.response
[constr_6896]	Multiplicity of TimingDescriptionEventChain.stimulus
[constr_6897]	Multiplicity of TimingDescriptionEventChain.segment
[constr_6898]	Multiplicity of ConcretePatternEventTriggering.offset
[constr_6899]	Multiplicity of ModeInSwcInstanceRef.base
[constr_6900]	Dual existence of TDEventVfb.port and TDEventVfb.portPrototypeBlueprint
[constr_6901]	Multiplicity of TDEventBsw.bswModuleDescription
[constr_6906]	Conformity of stimulus and response in a TimingDescriptionEventChain
[constr_6907]	Restriction of EOCExecutableEntityRefGroup.triggeringEvent
[constr_6908]	Restriction of EOCExecutableEntityRefGroup.letDataExchangeParadigm
[constr_6909]	Singleton ROOT_GROUP in a Hierarchical Execution Order Constraint
[constr_6910]	Referencing **from** a ROOT_GROUP in a Hierarchical Execution Order Constraint
[constr_6911]	Referencing **to** a ROOT_GROUP in a Hierarchical Execution Order Constraint
[constr_6912]	Mandatory specification of LET interval **recurrence**
[constr_6913]	Restriction on RTEEvents used in an LET interval
[constr_6914]	Restriction of the port context of an AgeConstraint
[constr_6915]	Affinity of ISignal in TDEventISignal
[constr_6916]	Affinity of Frame in TDEventFrame
[constr_6917]	Affinity of IPdu in TDEventIPdu

Table G.35: Changed Constraints in R24-11

G.17.6 Deleted Constraints in R24-11

Number	Heading
[constr_4517]	Referencing no further event chain segments
[constr_4550]	A Hierarchical Execution Order Constraint shall have an unambiguous root EOCExecutableEntityRefGroup
[constr_4560]	Restriction of TimingDescriptionEventChain.category
[constr_4563]	TDCpSoftwareClusterMapping shall reference only dispatchers or LET intervals
[constr_4564]	TDCpSoftwareClusterResourceMapping shall reference only dispatchers or LET intervals
[constr_4567]	Reference provider of TDCpSoftwareClusterMapping
[constr_4568]	Reference requestor of TDCpSoftwareClusterMapping

Table G.36: Deleted Constraints in R24-11

G.18 Changes in AUTOSAR release R25-11

G.18.1 Added Specification Items in R25-11

none

G.18.2 Changed Specification Items in R25-11

none

G.18.3 Deleted Specification Items in R25-11

Number	Heading
[TPS_TIMEX_00026]	`TDEventTTCanCycleStart` specifies the event related to the start of a TTCAN communication cycle

Table G.37: Deleted Specification Items in R25-11

G.18.4 Added Constraints in R25-11

none

G.18.5 Changed Constraints in R25-11

Number	Heading
[constr_4526]	Specifying `maxCycleRepetitions` and `maxSlotsPerCycle` in a Repetitive Execution Order Constraint
[constr_4529]	Number of nested elements referenced by the *root* `EOCExecutableEntityRefGroup`
[constr_4531]	Number of nested elements referenced by `EOCExecutableEntityRefGroup` representing a cycle
[constr_4540]	`maxCycleRepetitions` and `maxSlotsPerCycle` shall not be zero
[constr_6900]	Dual existence of `TDEventVfb.portPrototype` and `TDEventVfb.portPrototypeBlueprint`
[constr_6914]	Restriction of the `portPrototype` context of an `AgeConstraint`

Table G.38: Changed Constraints in R25-11

G.18.6 Deleted Constraints in R25-11

Number	Heading
[constr_6848]	Multiplicity of VfbTiming.component
[constr_6878]	Multiplicity of TDEventTTCanCycleStart.ttCanCluster

Table G.39: Deleted Constraints in R25-11

G.19 Changes in AUTOSAR release R26-11

G.19.1 Added Specification Items in R26-11

Number	Heading
[TPS_TIMEX_00130]	Temporal precedence of ExecutableEntitys
[TPS_TIMEX_00131]	Formula expression functions relevant for CONTENT_FILTER
[TPS_TIMEX_00132]	AutosarVariableInstance for CONTENT_FILTER
[TPS_TIMEX_00133]	AutosarOperationArgumentInstance for CONTENT_FILTER
[TPS_TIMEX_00134]	AutosarVariableInstance for CONTENT_FILTER
[TPS_TIMEX_00135]	Formula expression functions relevant for COMPLEX_EVENT
[TPS_TIMEX_00136]	Standardized function of TDEventOccurrenceExpression
[TPS_TIMEX_00137]	DataPrototype in a TDEventOccurrenceExpression.variable
[TPS_TIMEX_00138]	DataPrototype in a TDEventOccurrenceExpression.argument
[TPS_TIMEX_00139]	Completeness of a composed TimingDescriptionEventChain
[TPS_TIMEX_00140]	Definition of Core Execution Time
[TPS_TIMEX_00141]	Definition of Gross Execution Time and Response Time

Table G.40: Added Specification Items in R26-11

G.19.2 Changed Specification Items in R26-11

Number	Heading
[TPS_TIMEX_00100]	Optionality of accuracyInt
[TPS_TIMEX_00103]	Optionality of accuracyExt
[TPS_TIMEX_00108]	Usage of the attribute accuracy of TimingClockSyncAccuracy
[TPS_TIMEX_00110]	Standardized categorys of TimingDescriptionEventChain
[TPS_TIMEX_00112]	Representation of an LET interval release
[TPS_TIMEX_00113]	Representation of an LET interval terminate
[TPS_TIMEX_00115]	Representation of an SL-LET interval release

▽

△

Number	Heading
[TPS_TIMEX_00116]	Representation of an SL-LET interval `terminate`
[TPS_TIMEX_00117]	Representation of the **recurrence** of an LET interval
[TPS_TIMEX_00121]	Representation of the **duration** of an LET interval
[TPS_TIMEX_00122]	Application of a `PeriodicEventTriggering` constraint used to specify the *recurrence* of an LET interval
[TPS_TIMEX_00125]	Representation of an SL-LET interval in a `TimingDescriptionEventChain`
[TPS_TIMEX_00127]	`SystemTiming` of classic platform software clusters
[TPS_TIMEX_00128]	Default `letDataExchangeParadigm`
[TPS_TIMEX_00129]	Representation of the root in an Execution Order Constraint

Table G.41: Changed Specification Items in R26-11

G.19.3 Deleted Specification Items in R26-11

Number	Heading
[TPS_TIMEX_00001]	Purpose of `TimingDescriptionEvent`
[TPS_TIMEX_00003]	`EventTriggeringConstraint` specifies occurrence behavior respectively model
[TPS_TIMEX_00004]	`LatencyTimingConstraint` specifies latency constraints
[TPS_TIMEX_00006]	`SynchronizationTimingConstraint` specifies synchronicity constraints
[TPS_TIMEX_00007]	`ExecutionOrderConstraint` constrains the ordering of sequences of `ExecutableEntity`s
[TPS_TIMEX_00008]	`ExecutionTimeConstraint` to specify execution time constraints
[TPS_TIMEX_00010]	`PeriodicEventTriggering` specifies periodic occurrences of events
[TPS_TIMEX_00011]	`SporadicEventTriggering` specifies sporadic occurrences of events
[TPS_TIMEX_00012]	`ConcretePatternEventTriggering` specifies concrete pattern of occurrences of events
[TPS_TIMEX_00013]	`BurstPatternEventTriggering` specifies burst of occurrences of events
[TPS_TIMEX_00014]	`ArbitraryEventTriggering` specifies arbitrary occurrences of an event
[TPS_TIMEX_00015]	`OffsetTimingConstraint` specifies offset between occurrences of events
[TPS_TIMEX_00016]	Purpose of `TDEventVfb`
[TPS_TIMEX_00017]	`TDEventVariableDataPrototype` specifies events observable at sender/receiver ports
[TPS_TIMEX_00018]	`TDEventOperation` specifies events observable at client/server ports.
[TPS_TIMEX_00019]	`TDEventModeDeclaration` specifies events observable at mode ports.
[TPS_TIMEX_00020]	`TDEventSwcInternalBehavior` specifies observable events of runnable entities

▽

△

Number	Heading
[TPS_TIMEX_00021]	Purpose of TDEventCom
[TPS_TIMEX_00022]	TDEventISignal specifies events related to the exchange of I-Signals
[TPS_TIMEX_00023]	TDEventIPdu specifies events related to the exchange of I-PDUs
[TPS_TIMEX_00024]	TDEventFrame specifies events related to the exchange of network frames
[TPS_TIMEX_00025]	TDEventFrClusterCycleStart specifies the event related to the start of a FlexRay communication cycle
[TPS_TIMEX_00027]	Purpose of TDEventComplex
[TPS_TIMEX_00028]	TDEventBswInternalBehavior specifies observable events of BSW module entities
[TPS_TIMEX_00029]	Purpose of TDEventBsw
[TPS_TIMEX_00030]	TDEventBswModule specifies observable events when basic software entries are called
[TPS_TIMEX_00031]	TDEventBswModeDeclaration specifies observable events in case of BSW mode communication
[TPS_TIMEX_00033]	Purpose of SwcTiming
[TPS_TIMEX_00034]	Purpose of SystemTiming
[TPS_TIMEX_00035]	Purpose of BswModuleTiming
[TPS_TIMEX_00036]	Purpose of EcuTiming
[TPS_TIMEX_00039]	TDEventTrigger specifies events observable at trigger ports
[TPS_TIMEX_00042]	Purpose of TDEventVfbPort
[TPS_TIMEX_00043]	Purpose of TDEventVfbReference
[TPS_TIMEX_00044]	Purpose of TDEventSwc
[TPS_TIMEX_00045]	Purpose of TDEventSwcInternalBehaviorReference
[TPS_TIMEX_00052]	TDEventFrameEthernet specifies events related to the exchange of Ethernet frames
[TPS_TIMEX_00053]	Purpose of BswCompositionTiming
[TPS_TIMEX_00054]	SynchronizationPointConstraint explicitly specifies a synchronization point between executable entities
[TPS_TIMEX_00111]	Semantics of TimingDescriptionEventChain.stimulus
[TPS_TIMEX_00114]	Semantics of TimingDescriptionEventChain.response

Table G.42: Deleted Specification Items in R26-11

G.19.4 Added Constraints in R26-11

Number	Heading
[constr_6922]	Restriction of System.category in a SystemTiming view
[constr_6923]	Restriction of System.category in a VfbTiming view
[constr_6924]	Multiplicity of TDEventOccurrenceExpression.function

▽

△

Number	Heading
[constr_6926]	Restriction of `successor` and `directSuccessor`
[constr_6927]	Exclusivity of either `EOCExecutableEntityRef` or `EOCEventRef` in an `ExecutionOrderConstraint`
[constr_6928]	Exclusivity of `component` and `bswModuleInstance` in an `EOCExecutableEntityRef`
[constr_6929]	Exclusivity of `component` and `bswModuleInstance` in an `EOCEventRef`
[constr_6930]	Restriction of `ExecutionTimeConstraint.component`
[constr_6931]	Affinity of `BswModuleEntity` in GET/RT
[constr_6932]	Affinity of `RunnableEntity` in GET/RT

Table G.43: Added Constraints in R26-11

G.19.5 Changed Constraints in R26-11

Number	Heading
[constr_4504]	Restriction of the `scope` of an `AgeConstraint`
[constr_4505]	Specifying minimum and maximum number of occurrences
[constr_4506]	Specifying minimum inter-arrival time and pattern length
[constr_4507]	Specifying pattern length, pattern jitter and patter period
[constr_4508]	Multiplicity of `TDEventVfbPort.portPrototypeBlueprint`
[constr_4512]	Restriction of `TDEventSwcInternalBehavior.variableAccess`
[constr_4513]	`SynchronizationTimingConstraint` shall reference at least two events
[constr_4514]	`SynchronizationTimingConstraint` shall reference at least two event chains
[constr_4515]	Orthogonality of `stimulus` and `response` in a `TimingDescriptionEventChain`
[constr_4518]	Specifying end-points of a composed `TimingDescriptionEventChain`
[constr_4519]	Specifying `patternLength`
[constr_4521]	Specifying attribute `synchronizationConstraintType`
[constr_4522]	`SynchronizationTimingConstraint` shall either reference events or event chains
[constr_4523]	Restriction of `maxCycleRepetitions` and `maxSlotsPerCycle` to Repetitive Execution Order Constraint
[constr_4528]	The *root* `EOCExecutableEntityRefGroup` shall reference only `EOCExecutableEntityRefGroup`s
[constr_4529]	Number of nested elements referenced by the *root* `EOCExecutableEntityRefGroup`
[constr_4530]	An `EOCExecutableEntityRefGroup` representing a cycle shall reference only `EOCExecutableEntityRef`s respectively `EOCEventRef`s
[constr_4531]	Number of nested elements referenced by `EOCExecutableEntityRefGroup` representing a cycle

▽

△

Number	Heading
[constr_4532]	Successor relationship is not self-referencing
[constr_4533]	Maximum number of successor relationships
[constr_4540]	`maxCycleRepetitions` and `maxSlotsPerCycle` shall not be zero
[constr_4541]	Multiplicity of `EOCExecutableEntityRef.executable` in an Ordinary Execution Order Constraint
[constr_4542]	Multiplicity of `EOCExecutableEntityRef.executable` in a Hierarchical Execution Order Constraint
[constr_4543]	Maximum value of `minimumInterArrivalTime`
[constr_4544]	Specifying `patternLength`, `patternJitter` and `patternPeriod`
[constr_4548]	Multiplicity of `EOCEventRef.event` in an Ordinary Execution Order Constraint
[constr_4549]	Multiplicity of `EOCEventRef.event` in a Hierarchical Execution Order Constraint
[constr_4554]	Restriction of the referenced `TimingDescriptionEventChain` for a `letInterval`
[constr_4561]	Usage of the category value `DISPATCH_ENTRY_POINT` in `TimingDescriptionEvent`
[constr_4562]	Usage of the category value `DISPATCH_EXIT_POINT` in `TimingDescriptionEvent`
[constr_4565]	Consistency of `TDCpSoftwareClusterMapping.timingDescription` and `TDCpSoftwareClusterResourceMapping.timingDescription`
[constr_6816]	Restricted usage of `TimingDescriptionEventChain.isPipeliningPermitted` in `TimingDescriptionEventChain`
[constr_6817]	Restricted usage of `TimingDescriptionEvent.clockReference`
[constr_6818]	Multiplicity of `EventTriggeringConstraint.event`
[constr_6819]	Multiplicity of `PeriodicEventTriggering.jitter`
[constr_6820]	Multiplicity of `PeriodicEventTriggering.minimumInterArrivalTime`
[constr_6821]	Multiplicity of `PeriodicEventTriggering.period`
[constr_6822]	Multiplicity of `SporadicEventTriggering.maximumInterArrivalTime`
[constr_6823]	Multiplicity of `SporadicEventTriggering.minimumInterArrivalTime`
[constr_6824]	Multiplicity of `ConcretePatternEventTriggering.patternLength`
[constr_6825]	Multiplicity of `BurstPatternEventTriggering.maxNumberOfOccurrences`
[constr_6826]	Multiplicity of `BurstPatternEventTriggering.minimumInterArrivalTime`
[constr_6827]	Multiplicity of `BurstPatternEventTriggering.patternLength`
[constr_6828]	Multiplicity of `ArbitraryEventTriggering.minimumDistance`
[constr_6829]	Multiplicity of `ArbitraryEventTriggering.maximumDistance`
[constr_6830]	Multiplicity of `ConfidenceInterval.lowerBound`
[constr_6831]	Multiplicity of `ConfidenceInterval.propability`
[constr_6832]	Multiplicity of `ConfidenceInterval.upperBound`
[constr_6833]	Multiplicity of `ExecutionOrderConstraint.orderedElement`
[constr_6834]	Multiplicity of `EOCExecutableEntityRefGroup.nestedElement`
[constr_6835]	Multiplicity of `ExecutionTimeConstraint.executionTimeType`

▽

△

Number	Heading
[constr_6836]	Multiplicity of ExecutionTimeConstraint.executable
[constr_6837]	Multiplicity of LatencyTimingConstraint.latencyConstraintType
[constr_6838]	Multiplicity of LatencyTimingConstraint.maximum
[constr_6839]	Multiplicity of LatencyTimingConstraint.minimum
[constr_6841]	Multiplicity of LatencyTimingConstraint.scope
[constr_6842]	Multiplicity of OffsetTimingConstraint.maximum
[constr_6843]	Multiplicity of OffsetTimingConstraint.minimum
[constr_6844]	Multiplicity of OffsetTimingConstraint.source
[constr_6845]	Multiplicity of OffsetTimingConstraint.target
[constr_6846]	Multiplicity of SynchronizationTimingConstraint.synchronizationConstraintType
[constr_6847]	Multiplicity of SynchronizationTimingConstraint.tolerance
[constr_6849]	Multiplicity of SystemTiming.system
[constr_6850]	Multiplicity of BswModuleTiming.behavior
[constr_6851]	Multiplicity of BswCompositionTiming.implementation
[constr_6852]	Multiplicity of EcuTiming.ecuConfiguration
[constr_6853]	Multiplicity of ModeInBswInstanceRef.contextModeDeclarationGroupPrototype
[constr_6854]	Multiplicity of ModeInBswInstanceRef.targetModeDeclaration
[constr_6855]	Multiplicity of ModeInSwcInstanceRef.contextModeDeclarationGroupPrototype
[constr_6856]	Multiplicity of ModeInSwcInstanceRef.contextPort
[constr_6857]	Multiplicity of ModeInSwcInstanceRef.targetModeDeclaration
[constr_6858]	Multiplicity of TDEventBswInternalBehavior.tdEventBswInternalBehaviorType
[constr_6859]	Multiplicity of TDEventBswInternalBehavior.bswModuleEntity
[constr_6860]	Multiplicity of TDEventBswModule.tdEventBswModuleType
[constr_6861]	Multiplicity of TDEventBswModule.bswModuleEntry
[constr_6862]	Multiplicity of TDEventBswModeDeclaration.tdEventBswModeDeclarationType
[constr_6863]	Multiplicity of TDEventBswModeDeclaration.modeDeclaration
[constr_6864]	Multiplicity of TDEventISignal.tdEventType
[constr_6865]	Multiplicity of TDEventISignal.iSignal
[constr_6866]	Multiplicity of TDEventISignal.physicalChannel
[constr_6867]	Multiplicity of TDEventIPdu.tdEventType
[constr_6868]	Multiplicity of TDEventIPdu.iPdu
[constr_6869]	Multiplicity of TDEventIPdu.physicalChannel
[constr_6870]	Multiplicity of TDEventFrame.tdEventType
[constr_6871]	Multiplicity of TDEventFrame.frame

▽

△

Number	Heading
[constr_6872]	Multiplicity of TDEventFrame.physicalChannel
[constr_6873]	Multiplicity of TDEventFrameEthernet.tdEventType
[constr_6874]	Multiplicity of TDHeaderIdRange.maxHeaderId
[constr_6875]	Multiplicity of TDHeaderIdRange.minHeaderId
[constr_6876]	Multiplicity of TDEventCycleStart.cycleRepetition
[constr_6877]	Multiplicity of TDEventFrClusterCycleStart.frCluster
[constr_6879]	Multiplicity of TDEventOccurrenceExpression.formula
[constr_6880]	Multiplicity of AutosarVariableInstance.variableInstance
[constr_6881]	Multiplicity of AutosarOperationArgumentInstance.operationArgumentInstance
[constr_6882]	Multiplicity of TDEventSwcInternalBehavior.tdEventSwcInternalBehaviorType
[constr_6883]	Multiplicity of TDEventSwcInternalBehavior.runnable
[constr_6884]	Multiplicity of TDEventSwcInternalBehaviorReference.referencedTDEventSwc
[constr_6885]	Multiplicity of TDEventVfbPort.isExternal
[constr_6886]	Multiplicity of TDEventVfbReference.referencedTDEventVfb
[constr_6887]	Multiplicity of TDEventVariableDataPrototype.tdEventVariableDataPrototypeType
[constr_6888]	Multiplicity of TDEventVariableDataPrototype.dataElement
[constr_6889]	Multiplicity of TDEventOperation.tdEventOperationType
[constr_6890]	Multiplicity of TDEventOperation.operation
[constr_6891]	Multiplicity of TDEventModeDeclaration.tdEventModeDeclarationType
[constr_6892]	Multiplicity of TDEventModeDeclaration.modeDeclaration
[constr_6893]	Multiplicity of TDEventTrigger.tdEventTriggerType
[constr_6894]	Multiplicity of TDEventTrigger.trigger
[constr_6895]	Multiplicity of TimingDescriptionEventChain.response
[constr_6896]	Multiplicity of TimingDescriptionEventChain.stimulus
[constr_6898]	Multiplicity of ConcretePatternEventTriggering.offset
[constr_6899]	Multiplicity of ModeInSwcInstanceRef.base
[constr_6900]	Dual existence of TDEventVfb.portPrototype and TDEventVfb.portPrototypeBlueprint
[constr_6901]	Multiplicity of TDEventBsw.bswModuleDescription
[constr_6906]	Conformity of stimulus and response in a TimingDescriptionEventChain
[constr_6908]	Restriction of EOCExecutableEntityRefGroup.letDataExchangeParadigm
[constr_6909]	Singleton ROOT_GROUP in an Execution Order Constraint
[constr_6910]	Referencing **FROM** a ROOT_GROUP in an Execution Order Constraint
[constr_6911]	Referencing **TO** a ROOT_GROUP in an Execution Order Constraint
[constr_6912]	Mandatory specification of LET interval **recurrence**
[constr_6913]	Restriction on RTEEvents used in an LET interval

▽

△

Number	Heading
[constr_6914]	Restriction of the `portPrototype` context of an `AgeConstraint`
[constr_6915]	Affinity of `ISignal` in `TDEventISignal`
[constr_6916]	Affinity of `Frame` in `TDEventFrame`
[constr_6917]	Affinity of `IPdu` in `TDEventIPdu`
[constr_6918]	Referenced `TimingDescription`s in `TDCpSoftwareClusterMapping` and `TDCpSoftwareClusterResourceMapping`
[constr_6919]	Referenced `CpSoftwareCluster` of `TDCpSoftwareClusterMapping`
[constr_6920]	Multiplicity of `LatencyTimingConstraint.minimum` used in an LET interval
[constr_6921]	Disallow `TimingDescriptionEventChain` segmental circular-referencing

Table G.44: Changed Constraints in R26-11

G.19.6 Deleted Constraints in R26-11

Number	Heading
[constr_4500]	Restricted usage of Occurence Expression functions
[constr_4502]	Use references only as function operands
[constr_4503]	Restricted usage of `AutosarOperationArgumentInstance` for Content Filter
[constr_4510]	Specifying references to `RunnableEntity` and `VariableAccess`
[constr_4511]	Validity of referencing `RunnableEntity`
[constr_4516]	Completeness of a composed `TimingDescriptionEventChain`
[constr_4520]	Specifying attribute `synchronizationConstraintType`
[constr_4525]	Precedence of successor relationships `successor` and `directSuccessor`
[constr_4526]	Specifying `maxCycleRepetitions` and `maxSlotsPerCycle` in a Repetitive Execution Order Constraint
[constr_4527]	Referencing `TimingDescriptionEvent` in a Repetitive Execution Order Constraint
[constr_4534]	Maximum number of `directSuccessor` relationships
[constr_4536]	Compatible recurrence of any `ExecutableEntity`
[constr_4537]	References among elements in an `ExecutionOrderConstraint`
[constr_4538]	Hierarchical Execution Order Constraint: `EOCExecutableEntityRef`, `EOCEventRef`, and `EOCExecutableEntityRefGroup` shall be target or source of a successor relationship
[constr_4539]	The successor relationships `successor` and `directSuccessor` shall not be used
[constr_4545]	Referring either `ExecutableEntity`s or `AbstractEvent`s
[constr_4546]	Setting the attribute `isEvent`
[constr_4547]	Restriction of `ExecutionOrderConstraint.permitMultipleReferencesToEE`
[constr_4551]	Use only Numericals in `TDEventOccurrenceExpression`

▽

△

Number	Heading
[constr_4552]	Restricted usage of AutosarVariableInstance for Content Filter
[constr_4559]	Restriction of TimingDescriptionEvent.category
[constr_6897]	Existence of TimingDescriptionEventChain.segment
[constr_6907]	Restriction of EOCExecutableEntityRefGroup.triggeringEvent

Table G.45: Deleted Constraints in R26-11