Document Title	Explanation of Software Cluster Design And Integration Guideline for Classic Platform
Document Category	Explanation (EXP)
Document UID	975
Document Status	published
Part of AUTOSAR Standard	Classic Platform
Part of Standard Release	R26-11

Document Change History			
Date	**Release**	**Changed by**	**Description**
2026-11-26	R26-11	AUTOSAR Release Management	• Minor corrections / clarifications / editorial changes
2025-11-27	R25-11	AUTOSAR Release Management	• Describe MaxNumberOfCallee • Extend example to show multiple phases, remove dispatcher service resource
2024-11-27	R24-11	AUTOSAR Release Management	• No content changes
2023-11-23	R23-11	AUTOSAR Release Management	• No content changes
2022-11-24	R22-11	AUTOSAR Release Management	• Minor corrections / clarifications / editorial changes
2021-11-25	R21-11	AUTOSAR Release Management	• Minor corrections / clarifications / editorial changes
2020-11-30	R20-11	AUTOSAR Release Management	• Initial release

Disclaimer

This work (specification and/or software implementation) and the material contained in it, as released by AUTOSAR, is for the purpose of information only. AUTOSAR and the companies that have contributed to it shall not be liable for any use of the work.

The material contained in this work is protected by copyright and other types of intellectual property rights. The commercial exploitation of the material contained in this work requires a license to such intellectual property rights.

This work may be utilized or reproduced without any modification, in any form or by any means, for informational purposes only. For any other purpose, no part of the work may be utilized or reproduced, in any form or by any means, without permission in writing from the publisher.

The work has been developed for automotive applications only. It has neither been developed, nor tested for non-automotive applications.

The word AUTOSAR and the AUTOSAR logo are registered trademarks.

Table of Contents

1 Introduction 6
1.1 Objectives . . . 6
1.2 Scope . . . 6
2 Acronyms and abbreviations 7
3 Related Documentation 11
4 Software Clusters in Classic Platform 12
4.1 Software Clusters in a nutshell . . . 12
4.1.1 Design Philosophy, Goals and Non-Goals . . . 15
4.2 Relation to EcucPartitions . . . 16
4.3 Assumption on the applicable target ECUs . . . 17
4.4 Assumption on safety mechanisms . . . 17
4.5 Assumption on the to-be-clustered SW system . . . 17
4.6 Assigning Memory to Software Clusters . . . 18
4.7 Assigning Run-time to Software Clusters . . . 20
4.8 Service Oriented Communication in Software Clusters . . . 22
4.9 Design hints for clustered systems . . . 22
4.10 Mode Management in a clustered AUTOSAR ECU . . . 24
5 Software Clusters Example 25
5.1 Overview of the example system . . . 25
5.2 Interfaces . . . 26
5.3 Os Proxy configuration . . . 26
5.4 Example Extract of Software Clusters . . . 27
5.5 Example Configuration of ECUC . . . 29
5.6 ECUC Configuration of Os High Proxy . . . 29
5.7 File overview . . . 30
5.8 From model to code . . . 30
5.8.1 Rte and RIPS . . . 31
5.8.2 Binary Manifest . . . 33
5.8.2.1 Interface Descriptor Table of Cluster_AHB . . . 33
5.8.2.2 Offered Interface Table of Cluster_AHB . . . 36
5.8.2.3 Subscribed Interface Table of Cluster_AHB . . . 37
5.8.3 SwCluCOsProxyMaxNumberOfCallee - using one OsProxyOsTask to schedule multiple clusters . . . 38
6 Limitations and Restrictions 39
6.1 Out of scope topics . . . 39
6.1.1 Securing the Binary Objects . . . 39
6.1.2 Standardization of hypervisor solutions . . . 39
6.1.3 Mere build time optimization . . . 39
6.1.4 Easy deactivation of Software Clusters . . . 39

6.2 Utilization of RTE features . . . 40
6.3 Constraints on feasible decoupling . . . 40
6.4 Basic Software integration in an Application Software Cluster . . . 41
6.5 Functional restrictions . . . 42
6.6 Flashing and Compatibility . . . 42
6.6.1 Severe incompatibilities . . . 43
6.6.2 Severe Connection Errors . . . 43
A Example listings 44
A.1 Software Component Description . . . 44
A.1.1 DOC_SwCluC_SwcAnton_SWCD.arxml . . . 44
A.1.2 DOC_SwCluC_SwcBernd_SWCD.arxml . . . 48
A.1.3 DOC_SwCluC_SwcHugo_SWCD.arxml . . . 56
A.1.4 DOC_SwCluC_SwcCeline_SWCD.arxml . . . 63
A.1.5 DOC_SwCluC_SwcClaus_SWCD.arxml . . . 71
A.2 System Description . . . 80
A.2.1 DOC_SwCluC_SwcCompoAHB_SWCD.arxml . . . 80
A.2.2 DOC_SwCluC_SwcCompoHost_SWCD.arxml . . . 91
A.2.3 DOC_SwCluC_Sys_TopLvl_SWCD.arxml . . . 100
A.2.4 DOC_SwCluC_Sys_SwClusters.arxml . . . 102
A.2.5 DOC_SwCluC_Sys_Descr_TopLvl.arxml . . . 103
A.2.6 DOC_SwCluC_Sys_HWT.arxml . . . 110
A.2.7 DOC_SwCluC_Sys_ResPoolCommunicationResources.arxml . . . 111
A.2.8 DOC_SwCluC_Sys_ResPoolServiceResources.arxml . . . 112
A.2.9 DOC_SwCluC_Sys_ResPoolServiceResourceNeeds.arxml . . . 115
A.2.10 DOC_SwCluC_Sys_Extr_Host.arxml . . . 117
A.2.11 DOC_SwCluC_Sys_Extr_TopLvl_SWCD_Host.arxml . . . 122
A.2.12 DOC_SwCluC_Sys_Extr_AHB.arxml . . . 123
A.2.13 DOC_SwCluC_Sys_Extr_TopLvl_SWCD_AHB.arxml . . . 129
A.3 EcuConfiguration . . . 130
A.3.1 DOC_SwCluC_Ecuc_EcuC_AHB.arxml . . . 130
A.3.2 DOC_SwCluC_Ecuc_Os_AHB.arxml . . . 130
A.3.3 DOC_SwCluC_Ecuc_Os_Host.arxml . . . 133
A.3.4 DOC_SwCluC_Ecuc_SwCluC_AHB.arxml . . . 135
A.3.5 DOC_SwCluC_Ecuc_SwCluC_Host.arxml . . . 159
B Referenced Meta Classes 185
C Referenced ECUC Configuration Parameters 214
C.1 BswM . . . 214
C.1.1 BswMRule . . . 214
C.1.2 BswMLogicalExpression . . . 216
C.1.3 BswMModeRequestPort . . . 217
C.1.4 BswMActionList . . . 218
C.1.5 BswMAction . . . 219

C.1.6 BswMSwitchPort . . . 220
C.2 MemMap . . . 221
C.2.1 MemMapAddressingModeSet . . . 221
C.2.2 EcucPartition . . . 224
C.3 Os . . . 225
C.3.1 OsAlarm . . . 225
C.3.2 OsApplication . . . 226
C.3.3 OsCounter . . . 230
C.3.4 OsEvent . . . 232
C.3.5 OsScheduleTable . . . 233
C.3.6 OsScheduleTableExpiryPoint . . . 235
C.3.7 OsTask . . . 236
D Referenced C-API 239
D.1 RTE . . . 239
D.1.1 RTE Lifecycle API Reference . . . 239
D.1.1.1 Rte_Init . . . 239
D.1.1.2 Rte_Start . . . 239
D.1.2 RTE RIPS API Reference . . . 240
D.1.2.1 Rte_Rips_DataIsUpdated . . . 240
D.1.2.2 Rte_Rips_DRead . . . 240
D.1.2.3 Rte_Rips_DataIsUpdated_EventActivation . . . 240
D.1.2.4 Rte_Rips_Feedback . . . 241
D.1.2.5 Rte_Rips_Invoke . . . 242
D.1.2.6 Rte_Rips_InvocationHandler . . . 242
D.1.2.7 Rte_Rips_Prm . . . 243
D.1.2.8 Rte_Rips_Read . . . 243
D.1.2.9 Rte_Rips_ReturnResult . . . 244
D.1.2.10 Rte_Rips_Start . . . 244
D.1.2.11 Rte_Rips_Stop . . . 245
D.1.2.12 Rte_Rips_SchM_Deinit . . . 245
D.1.2.13 Rte_Rips_SchM_Init . . . 246
D.1.2.14 Rte_Rips_SwitchNotificationStatusType . . . 246
D.1.2.15 Rte_Rips_Switch . . . 247
D.1.2.16 Rte_Rips_DequeueModeSwitch . . . 247
D.1.2.17 Rte_Rips_Trigger . . . 248
D.1.2.18 Rte_Rips_Write . . . 248
D.1.3 RTE API Reference . . . 248
D.2 OS . . . 249
D.2.1 OS API Reference . . . 250
D.2.1.1 SwCluC_BManif_GetHandle . . . 250

1 Introduction

This explanatory provides additional information to Software Clusters of the AUTOSAR Standard.

1.1 Objectives

The goal of this document is to

- provide an overview about the technical approach Software Clusters
- explain the utilization of Software Clusters in AUTOSAR Classic Platform
- lists design and feature restrictions
- provide some examples

1.2 Scope

This document discusses only Software Clusters in the **AUTOSAR Classic Platform**!

2 Acronyms and abbreviations

The glossary below includes acronyms and abbreviations relevant to Requirements on Software Cluster Connection that are not included in the AUTOSAR Glossary [1].

Abbreviation / Acronym:	Description:
SwCluC	Software Cluster Connection

Table 2.1: Acronyms and Abbreviations

Terms:	Description:
Software Cluster	A Software Cluster groups all AUTOSAR artifacts that are relevant to deploy software on a machine. The full definition is given in document [1]
Software Cluster Connection	The Software Cluster Connection is the BSW module that provides the features to • connect the Binary Objects deployed on the same machine • substitute not locally-available BSW modules in an Application Software Cluster, whose interfaces are required for the integrated SW, by so called Proxy Modules. • implement the VFB communication features between Software Clusters together with RTE with the means of an RTE Implementation Plug-In
machine	A machine consists of a set of computing resources - such as microcontroller cores, memory or peripheral (e.g. communication) devices - and has the ability to execute software applications. The representation of a machine in the AUTOSAR Classic Platform could be done with an EcuInstance, but note that this semantic is currently in clarification. Further information is given in document [1].
binary-identical	Bit for Bit identical
Binary Object	A set of files, which contains the binary executable code and data. This binary executable code and data will not be modified again, before programming it on the target ECU.
Binary Manifest	The Binary Manifest is the well-defined interface of the Software Cluster's Binary Object, providing the meta information of a resources and information - so called handles - to access such a resource.
Application Software Cluster	A Software Cluster that mainly contains software components, and only selected BSW modules (e.g. a Service module, transformers, e.t.c.)
Host Software Cluster	The single Software Cluster that contains the major part of the BSW, and especially the micro controller dependent lower layer BSW Modules, e.g. OS and MCAL.
Substitution Software Cluster	The single Software Cluster that can override the provided resources of other Software Clusters for bug fixing purpose.

Terms:	Description:
Proxy Module	A Proxy Module substitutes a BSW module in an Application Software Cluster. A Proxy module itself is split into High Proxy Module and Low Proxy Module. The High Proxy Module provides dedicated interfaces for modules in higher layers or same layer, and the functionality to connect them via the Binary Manifest to the Low Proxy Module in the Host Software Cluster.
High Proxy Module	The part of the Proxy Module residing in an Application Software Cluster.
Low Proxy Module	The part of the Proxy Module residing in the Host Software Cluster.
Os High Proxy	A type of Proxy Module implementing Os APIs in the Application Software Cluster.
Os Low Proxy	A type of proxy Module implementing an Os abstraction in the Host Software Cluster.
NvM High Proxy	A type of Proxy Module substituting the NVRAM Manager in the Application Software Cluster.
NvM Low Proxy	A type of Proxy Module connecting the NvM High Proxys to the NVRAM Manager in the Host Software Cluster.
RTE Implementation Plug-In	A RTE Implementation Plug-In is a part of the overall RTE implementation, which is not provided by the RTE Generator, but from an additional source (e.g. a Plug-In Generator or a manually implemented source code).
Local Software Cluster Communication Plug-In	A Local Software Cluster Communication Plug-In is an RTE Implementation Plug-In, which handles the communication locally inside a Software Cluster. This includes the Transformer handling, if a DataMapping exist for the according Communication Graph
Cross Software Cluster Communication Plug-In	A Cross Software Cluster Communication Plug-In is an RTE Implementation Plug-In that handles the communication towards other Software Clusters. This includes the Transformer handling, if intra ECU transformation is configured.
Communication Graph	The sum of all AbstractAccessPoints to elements of PortInterfaces, instantiated in PortPrototypes which are connected to each other; or the sum of all accesses from BswModuleEntitys to interface elements in a BswModuleDescriptions connected to each other.
Data Communication Graph	The sum of all VariableAccesses to VariableDataPrototypes instantiated in PortPrototypes, which are connected to each other; or the sum of all VariableAccesses to VariableDataPrototypes in the InternalBehavior; or the sum of all BswVariableAccesses to VariableDataPrototypes in BswModuleDescriptions connected to each other.
Parameter Communication Graph	The sum of all ParameterAccesses to ParameterDataPrototypes instantiated in PortPrototypes, which are connected to each other; or the sum of all ParameterAccesses to ParameterDataPrototypes in the InternalBehavior.
Client Server Communication Graph	The sum of all ServerCallPoints to operations instantiated in PortPrototypes, which are connected to each other, including the associated server runnable.
Trigger Communication Graph	The sum of all ExternalTriggeringPoints for triggers instantiated in PortPrototypes, which are connected to each other, including the associated triggered runnable.

Terms:	Description:
Mode Communication Graph	The sum of all ModeAccessPoints and ModeSwitchPoints to ModeDeclarationGroupPrototypes instantiated in PortPrototypes, which are connected to each other; or the sum of all managedModeGroups and accessedModeGroups to ModeDeclarationGroupPrototypes in BswModuleDescriptions connected to each other.
mode manager	Entering and leaving modes is initiated by a *mode manager*. A *mode manager* is either a software component that provides a p-port typed by a ModeSwitchInterface, or a BSW module that defines in its BswModuleDescription a ModeDeclarationGroupPrototype in the role providedModeGroup.
mode switch notification	The communication of a mode switch from the mode manager to the mode user, using either the ModeSwitchInterface or providedModeGroup and requiredModeGroup ModeDeclarationGroupPrototypes.
mode switch port	The port for receiving (or sending) a mode switch notification. For this purpose, a mode switch port is typed by a ModeSwitchInterface.
mode user	An *AUTOSAR SW-C* or *AUTOSAR Basic Software Module* that depends on modes, is called a mode user. The dependency can occur through a SwcModeSwitchEvent/BswModeSwitchEvent, a ModeAccessPoint for a provided/required mode switch port, or a accessedModeGroup for a providedModeGroup/requiredModeGroup ModeDeclarationGroupPrototype.
on-entry ExecutableEntity	A RunnableEntity that is triggered by a SwcModeSwitchEvent with *ModeActivationKind* 'entry'; or a BswSchedulableEntity that is triggered by a BswModeSwitchEvent with *ModeActivationKind* 'entry'.
on-exit ExecutableEntity	A RunnableEntity that is triggered by a SwcModeSwitchEvent with *ModeActivationKind* 'exit'; or a BswSchedulableEntity that is triggered by a BswModeSwitchEvent with *ModeActivationKind* 'exit'.
on-transition ExecutableEntity	A RunnableEntity that is triggered by a SwcModeSwitchEvent with *ModeActivationKind* 'transition'; or a BswSchedulableEntity that is triggered by a BswModeSwitchEvent with *ModeActivationKind* 'transition'.
trigger port	A PortPrototype, which is typed by an TriggerInterface
trigger sink	A *trigger sink* relies on the activation of RunnableEntity or a BswSchedulableEntity, if a particular Trigger is raised. A *trigger sink* has a dedicated require trigger port(s) and / or requiredTrigger Trigger(s) to communicate to the trigger source(s).
trigger source	A *trigger source* administrates the particular Trigger, and informs the RTE or *Basic Software Scheduler* if the Trigger is raised. A *trigger source* has dedicated provide trigger port(s) and / or releasedTrigger Trigger(s) to communicate to the trigger sink(s).

Terms:	Description:
triggered BswSchedulableEntity	A BswSchedulableEntity that is triggered at least by one BswExternalTriggerOccurredEvent or BswInternalTriggerOccurredEvent. In particular cases, the *Trigger Event Communication* or the *Inter Basic Software Schedulable Entity Triggering* is implemented by the *Basic Software Scheduler* as a direct or trusted function call of the triggered ExecutableEntity, by the triggering ExecutableEntity.
triggered ExecutableEntity	A RunnableEntity that is triggered by at least one ExternalTriggerOccurredEvent / InternalTriggerOccurredEvent; or a BswSchedulableEntity that is triggered by at least one BswExternalTriggerOccurredEvent/ BswInternalTriggerOccurredEvent. In particular cases, the Trigger Event Communication or the *Inter Runnable Triggering* is implemented by RTE or *Basic Software Scheduler* as a direct or trusted function call of the triggered ExecutableEntity, by the triggering ExecutableEntity.
triggered runnable	A RunnableEntity that is triggered at least by one ExternalTriggerOccurredEvent or InternalTriggerOccurredEvent. In particular cases, the Trigger Event Communication or the *Inter Runnable Triggering* is implemented by RTE as a direct or trusted function call of the *triggered runnable*, by the triggering runnable.
SomeIPEvent	SomeIPEvent - a message sent by an ECU implementing a service instance to an ECU using this service instance (Publish/Subscribe).
SomeIPMethod	SomeIPMethod - a remote function which can be invoked via a message sent by an ECU implementing a service instance to an ECU using this service instance. An ECU can be in the role of the provider (offer a Method) and/or in the role of the consumer (invoke a remote Method).
SomeIPService	A SomeIPService is a type of operation that has a published specification of interface and behavior, involving a contract between the provider of the capability and the potential clients.

Table 2.2: Terms

3 Related Documentation

[1] Glossary
AUTOSAR_FO_TR_Glossary

[2] Specification of Memory Mapping
AUTOSAR_CP_SWS_MemoryMapping

[3] ISO 26262:2018 Road vehicles -– Functional Safety
https://www.iso.org

[4] Specification of Timing Extensions for Classic Platform
AUTOSAR_CP_TPS_TimingExtensions

[5] Specification of Software Cluster Connection module
AUTOSAR_CP_SWS_SoftwareClusterConnection

[6] Software Component Template
AUTOSAR_CP_TPS_SoftwareComponentTemplate

[7] System Template
AUTOSAR_CP_TPS_SystemTemplate

[8] Basic Software Module Description Template
AUTOSAR_CP_TPS_BSWModuleDescriptionTemplate

[9] Specification of RTE Software
AUTOSAR_CP_SWS_RTE

[10] Specification of Operating System
AUTOSAR_CP_SWS_OS

[11] ISO 17356-3: Road vehicles – Open interface for embedded automotive applications – Part 3: OSEK/VDX Operating System (OS)

4 Software Clusters in Classic Platform

4.1 Software Clusters in a nutshell

This section provides a compact overview about the general solution approach. Please apologize that further details are only given in the section where the detailed solutions are elaborated.

The approach of `Software Clusters` in the AUTOSAR Classic Platform, is considering the fact that several ECUs have an inner structure, which is crucial for the SW system. This is illustrated in figure 4.1, which shows the conceptual meta model:

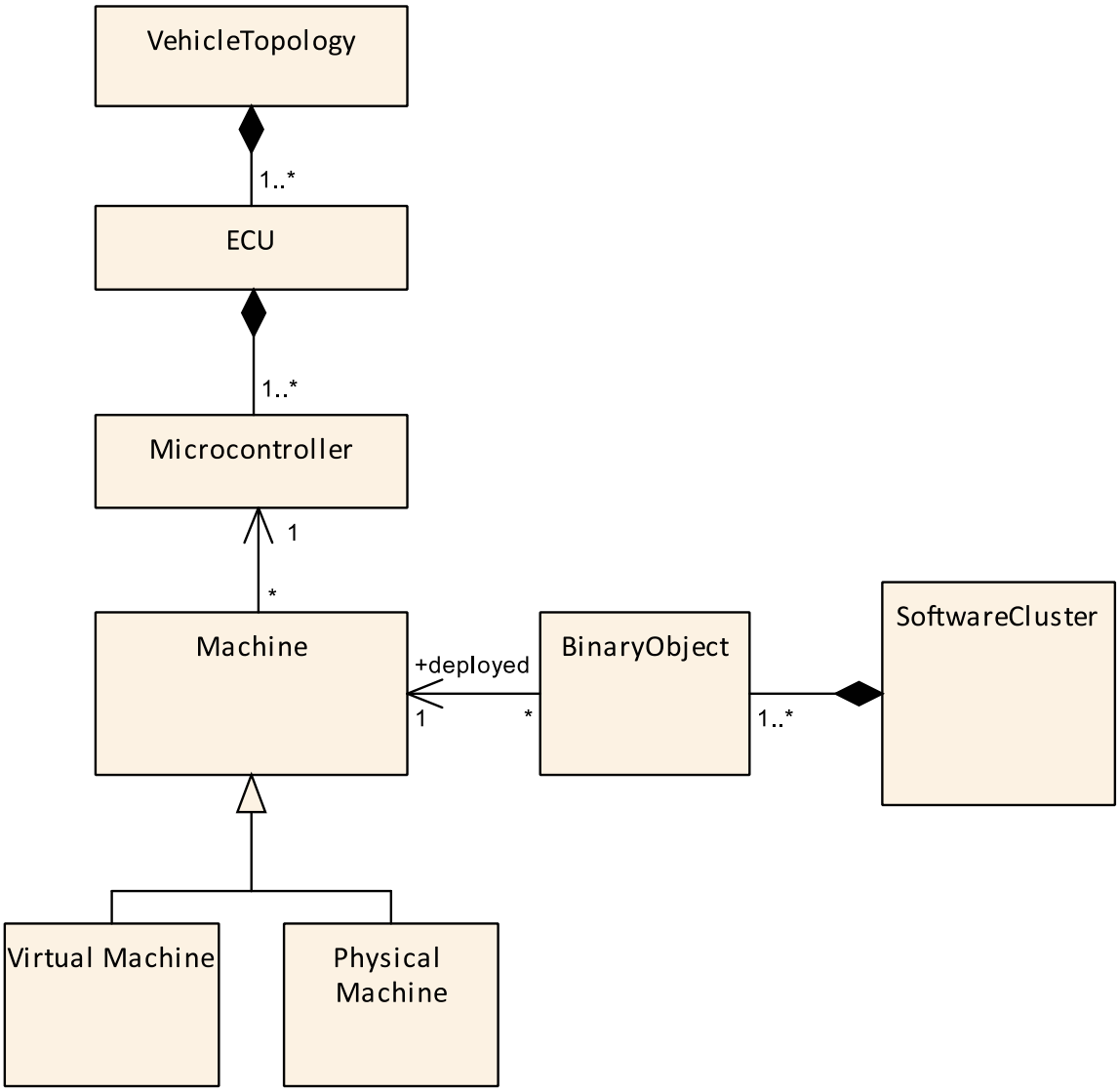

Figure 4.1: Hierarchy of ECUs, Machines and Software Clusters in a vehicle topology

The topology of a vehicle has several ECUs. One ECU can have 1 to N microcontrollers. Since microprocessors are in scope of AUTOSAR Adaptive Platform, they are not considered here. On one micro controller, 1 to N Machines are hosted. In case of N > 1, those are virtual and share the resources of the micro controller. Furthermore, each Machine owns one BSW Stack, e.g. from AUTOSAR perspective it is an instance of a Classic Platform Architecture!

This is considered as state of the art, even if the AUTOSAR Methodology might not be able to describe all details of such setups - not to mention that hypervisors are not standardized by AUTOSAR.

With `Software Clusters`, the overall software of a Classic Platform Architecture is split into independent parts. Each `Software Cluster` is an independent Build Unit, and the result of the cluster specific build processes are the `Binary Objects`.

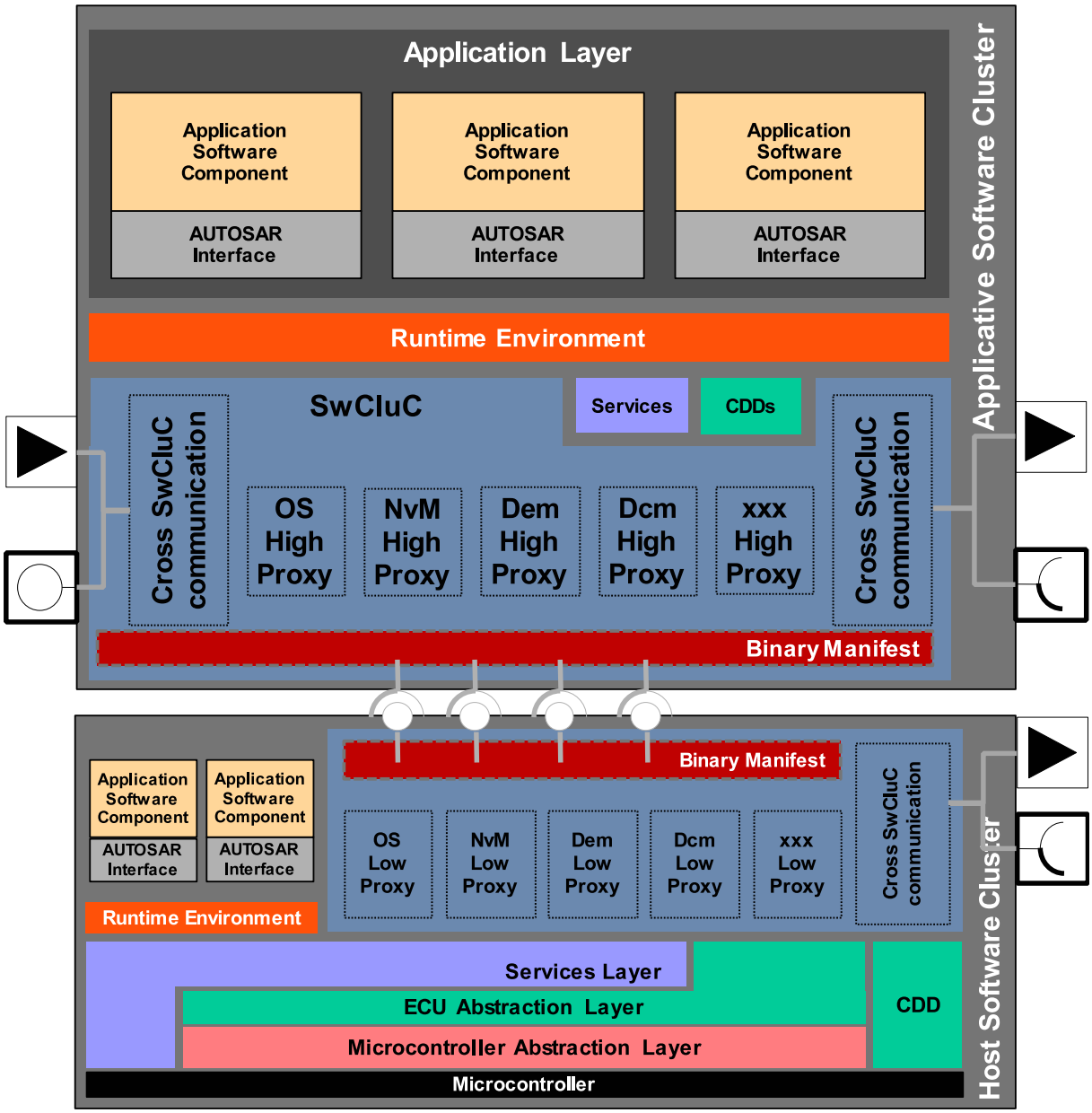

Figure 4.2: Software Cluster Connection in AUTOSAR Layered Software Architecture

As shown in figure 4.2, in a clustered software system the existing Layered Architecture gets extended by one new building block, the `Software Cluster Connection`. This `Software Cluster Connection` in turn has three major sub-blocks:

- The `Binary Manifest`
- The `Cross Cluster Communication`
- The `Proxy Modules`

The `Binary Manifests` provide the means to connect the `Binary Objects` deployed on the same machine.

The Cross Cluster Communication provides the VFB communication features between Software Clusters. Note that service interfaces are out of scope, since the access to BSW modules is provided via the Proxy Modules.

The High Proxy Modules substitute non-local BSW modules in Application Software Clusters, and implement the connection to the Low Proxy Modules in the Host Software Cluster, which then connect to the real BSW Modules. The High Proxy Modules exposes the same interface as the real BSW Module.

The Host Software Cluster contains the major part of the BSW Stack, especially micro controller dependent modules, including the Operating System. This implies that the dynamic behavior of the machine is mainly determined by the Host Software Cluster, which implements the scheduling. However, the implementation of the Application Software Clusters needs to conform to the scheduling strategy of the Host Software Cluster.

In an Application Software Cluster, Application Software Components and BSW modules (with strong limitations) can be integrated. Basic Software Modules that are no available locally in an Application Software Cluster, but whose interfaces are required for the integrated software, are substituted by Proxy Modules.

Some RTE features might be restricted, since the implementations of those features do not scale, or may have unintended side effects to other Software Clusters. For instance, synchronous client server calls cross Software Clusters require full context decoupling, where the impact to overall schedule is hard to foresee in a single Software Cluster scope.

The BSW Software is still reachable by synchronous client server calls. The implementation of the Multi Core Basic Software distribution concept is considered as prerequisite for scalability and good performance for SW systems applying Software Clusters.

4.1.1 Design Philosophy, Goals and Non-Goals

The goal of Software Clusters is to provide flexibility for design and implementation of an AUTOSAR system and, by modularization, make it possible to localize the impact of a change in one cluster. Some architectural changes can be introduced step wise, and certain implementation changes no longer require a rebuild of the complete software. It is explicitly not the goal, to support every possible usecase and solve every possible problem, or to reinvent the Adaptive Platform.

While Software Clusters make it possible to reduce the rate of change, it is still possible to rebuild every Software Cluster, including the Host Software Cluster. Some usecases will be solved only partially by this concept (or not at all), and still require a change to the BSW and a rebuild of the Host Software Cluster. The features in this concept will make changes to the BSW easier, so it might even be that the Host Software Cluster is rebuilt more often than before. But instead of rare, large changes to the BSW, the concept enables frequent, smaller changes.

4.2 Relation to EcucPartitions

The Software Cluster concept targets microcontrollers, which typically are very resource constrained. Therefore, it is important that this concept adds as little overhead as possible. Simply put: you only pay for what you use, but you also only get what you pay for. The relation between Software Clusters and EcucPartitions is one area where this is evident.

EcucPartitions offer the possibility to separate functions. Since they are implemented using OsApplications, separation of memory accesses and of runtime behavior can be achieved to a certain degree. On the other hand, the execution of multiple OsApplications also causes a relatively large overhead, requiring task switches (which can take hundreds of processor cycles) and additional administrative overhead (depending on the current and next task, it might be required to change the execution level, reconfigure the MPU, etc.). With a growing number of EcucPartitions, this overhead can become significant. Therefore, it is possible to reuse one EcucPartition in multiple Software Clusters.

At the same time, a system designer wants to combine functions from different EcucPartitions inside one cluster. This might be the case with large features, where some parts carry different ASIL requirements, or if OBD relevant parts should be separated from those that are not OBD relevant. For example, a brake function cluster might contain functions from different ASIL levels. Some actuate the brake and are safety relevant, but others, like a function that evaluates how smooth the ride is, are not safety relevant. Therefore, one Software Cluster can contain multiple EcucPartitions.

To fulfill both of these requirements, it is possible to have multiple EcucPartitions in one Software Cluster and to share an EcucPartitions between several Software Clusters (n:m relation).

If an EcucPartition is shared between Software Clusters, at runtime there is no way to enforce the separation between the Software Components from different Software Clusters it contains. But there is still a slight benefit, because the Software Clusters are separated logically and by memory address regions. Some violations could be detected not at runtime, but by static checks outside the ECU. For a given piece of code, the range of allowed memory regions and used features is much smaller. If static check tools would take this into account, it would make static checks or proofs about the software easier.

If the constrained resources allow, it is preferable not to share EcucPartitions between Software Clusters, since this provides a better separation between Software Clusters. Unfortunately, in practice this often cannot be avoided, so the goal should be to minimize this sharing as much as possible.

4.3 Assumption on the applicable target ECUs

Clustering a Classic Platform architecture shall work with state-of-the-art micro controllers. This means on one hand that enough resources especially w.r.t. RAM, ROM and CPU-Cores and their calculation power exist. This might also imply a 32-bit architecture or higher.

On the other hand, a utilization of the concepts and features on today's existing platforms are in scope, supporting various optimizations. For instance, a general software separation of Software Clusters by hardware features should be avoided since this usually uses rare resources of micro controller.

Targets with Memory Management Units are out of scope or at least are not especially considered by the standardized solution.

4.4 Assumption on safety mechanisms

The AUTOSAR CP Architecture assumes that communication local to an ECU utilizing RAM is safe. Therefore, the communication between Software Clusters on the same machine is also considered as safe. Integrity of machine local communication is ensured by the usage of partitions (with memory protection) and sufficiently reliable hardware (ECC RAM, suitable FID rates, etc.)

This means spatial and temporal separation of software needs to be implemented on the target microcontroller, based on the already introduced concept of partitions in the AUTOSAR Classic Platform architecture. This concept does not introduce additional methods to ensure such separation.

4.5 Assumption on the to-be-clustered SW system

Note: The numbers given in this chapter shall only express the rough magnitude to indicate a certain complexity. This framework was used in the concept development to prioritize sub-features, optimization capabilities, and to discuss acceptable restrictions of the solution. Nevertheless, in case of accepted restrictions, those will be part as constrains to the elaborated specifications.

The Software Components, which are mapped to different Software Clusters, shall aim for loose coupling.

'In computing and systems design, a loosely coupled system is one in which each of its components has, or makes use of, little or no knowledge of the definitions of other separate components. Subareas include the coupling of classes, interfaces, data, and services.' (See Wikipedia 'Loose coupling is the opposite of tight coupling.')

The concept assumes that the number of interfaces across Software Clusters is much smaller than the total number of interfaces between Software Components.

This could be condensed into some rough estimate that the interface data of Software Clusters should be at least a factor of 10 smaller than the internal data flow (approx. 3k/machine). Preferably, interfaces should be well defined and rather stable, nevertheless a change of interfaces during the development time is explicitly supported by this concept.

Beside the static interfaces, the different Software Clusters shall have only have loose timing dependencies. Basically, the same design goals as for the parallelization and multi-core designs apply. E.g.

- avoid strict sequences
- avoid synchronous interactions
- avoid strict executions orders between Software Clusters

In general, a system designer has to keep in mind that any dependency between Software Clusters has to be solved at a higher level. E.g.

- interfaces need to be negotiated
- required execution orders needs to be agreed between Software Cluster providers and ensured during the Software Cluster integration on a machine
- required execution order needs to be ensured by the Software Cluster integration on a machine

But those cross Software Cluster dependencies are contradicting the goals of independent development, test and release of Software Clusters!

The number of Software Clusters on a physical microcontroller shall be in the area of 2 to 20. But with a growing number of Software Clusters - considering the absence of virtual memory (MMU) - the fragmentation of memory will increase. This fragmentation depends only on the number of Software Clusters and their required partitions, regardless of the number of machines. In any case, the precise number needs to be crosschecked with the capabilities of the physical hardware.

The software inside an Application Software Cluster does not use or implement interrupts.

It is assumed to be mainly control loop SW - usually time driven, but may also react on a limited number of sporadic events.

4.6 Assigning Memory to Software Clusters

Typically, the overall memory of microcontrollers is composed out of different memory types each serving for a specific purpose (e.g. RAM, FLASH program ROM, FLASH data ROM)). In addition, a specific segment of a memory type may have different performance for different use cases (e.g. access speed might be different for different microcontroller cores.) Splitting a monolithic CP software architecture into individual

buildable units requires that each Software Cluster provider has a clear notion which memory can be used for which purpose. Since microcontrollers typically do not support memory virtualization, it is not only required to agree on the amount of memory, but also on the specific address ranges.

The suggested methodology works as following:

The machine architect splits the overall memory into logical memory slots and belonging directions for which purpose such memory slot can be used. Those directions correspond to the physical properties of such memory slots (e.g. .RAM or FLASH) but also to the software partitioning (e.g. spatial separation by MPU), functional grouping (e.g. memory of calibration data set) and performance goals.

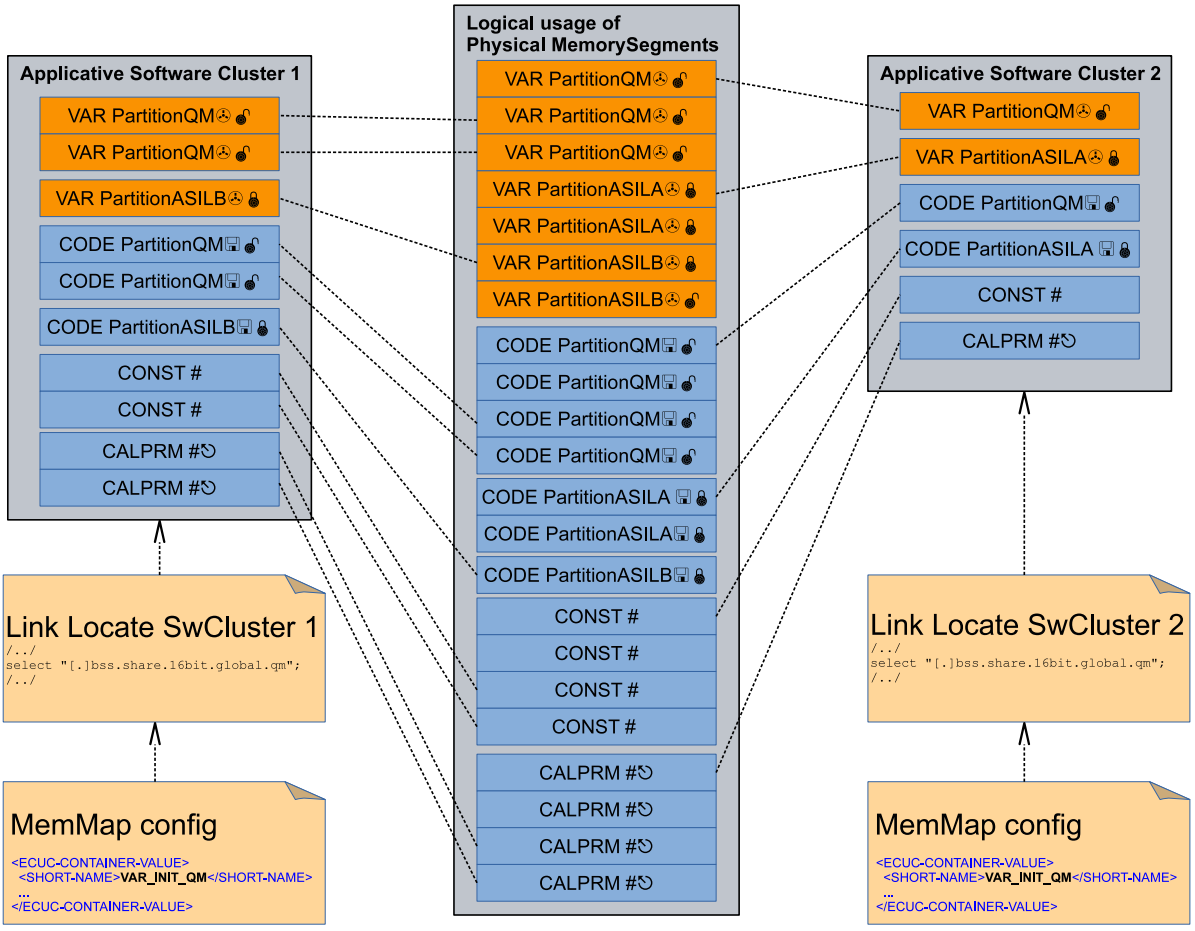

Figure 4.3: Assignment of memory to Software Clusters

The figure 4.3 illustrates the principle how different memory gets assigned to the Software Clusters.

Each Software Clusters gets now different memory slots assigned depending on the predicted memory consumption of the contained functionality and the required type of memories. Such an assignment can be directly transferred to a link-locate file and an initial configuration of the AUTOSAR Memory Mapping. The Software Cluster specific link-locate file ensures, that the Software Cluster specific build only

allocates memory which is reserved for this Software Cluster. The initial configuration of the AUTOSAR Memory Mapping in turn can define the MemMapAddressingModeSets with the configuration of pragmas controlling the assignment of code and variables to linker sections.

Further details can be found in document [2].

In addition to the static memory usage, the stack usage needs to be considered. Please note that a Host Software Cluster calls the 'Proxy' OS Tasks of the Application Software Cluster which in turn can invoke functions of BSW in the Host Software Cluster. Due to this common call graph a stack estimation and dimensioning has to consider the software architecture of Host Software Cluster and the individual Application Software Cluster in common.

4.7 Assigning Run-time to Software Clusters

First of all, please be aware that the use case 'freedom from unintended side effects' in a clustered system is different from 'freedom from interference' as a safety goal of ISO26262 [3]. The safety considerations usually assume first a design for coexistence and later apply measures to avoid interference, or at least to have a safe detection and failure reaction in case of interference.

With the native means of an AUTOSAR OS, it is almost impossible to create a schedule, which guarantees a complete 'freedom from unintended side effects' between various software sub systems. In a pure priority-based scheduling, it is always possible to occupy more calculation time on a given priority level, than is acceptable for other functionalities on the same or a lower priority. This can only be strictly avoided, by assigning a distinct set of OS Tasks on a dedicated core to each software sub system, which very likely is not affordable in terms of resources.

Consequently, managing a distributed development with Software Clusters requires the upfront design of an overall schedule, and the management of calculation time budgets in such a schedule. In practical use, it is also required to maintain such a design over the development time, in order to react to changing scheduling demands or identified problems.

With the concept of proxy tasks, an Application Software Cluster has already well-defined entry points. Those entry points need to be qualified by timing properties, like trigger conditions (e.g. a periodic occurrence), *jitter*, or *maximum execution time*. Since those entry points can be described with the AUTOSAR Timing Extensions [4], a formal description of such timing properties is possible.

With this approach, it is possible to give a dynamic framework architecture to the different Software Cluster providers, against which they can prove their integration. This proof can be done by static code analyses, and real runtime measurements. A run-time estimation based on static code analysis has the advantage that a first proof of dynamic architecture boundaries (e.g. the time budget of proxy task) can be already done without any running software.

The online monitoring of those runtime budgets is currently not standardized in AUTOSAR, but could be implemented as vendor-specific functionality with CDDs.

Nonetheless, if software gets integrated in a common AUTOSAR OS schedule, the software design and implementation need to support this coexistence. For example, the maximum runtime of `RunnableEntity`s shall be smaller than the expected minimum response time in a non-preemptive schedule.

Additionally to the aspect of software scheduling, the functional impact of communication behavior needs to be taken into consideration. Depending on the executed algorithm, it might have severe impact on the output, whether the input signals from the actual calculation (N), or the ones from the previous calculation (N-1) are taken. Worst-case, the behavior even fluctuates between these two cases, which in turn can add jitter to the calculated output.

In a clustered system (assuming that the task system is shared), the total runtime of OS Tasks, and also the exact point of time when a specific Runnable is executed in an OS Task, frequently changes with each integration of new `Software Cluster` versions. This jeopardizes the approach to localize the functional impact to the changed Software Cluster.

The Logical Execution Time (LET) can support to ensure a stable software behavior, by abstracting the physical execution. In brief, the concept of LET splits the overall schedule into so called Logical Execution Time frames. A LET frame starts with its release point, and ends with its termination point. The communication of software located to different LET frames is executed only at the terminate point of the sending LET frame and the release point of the receiving LET frame.

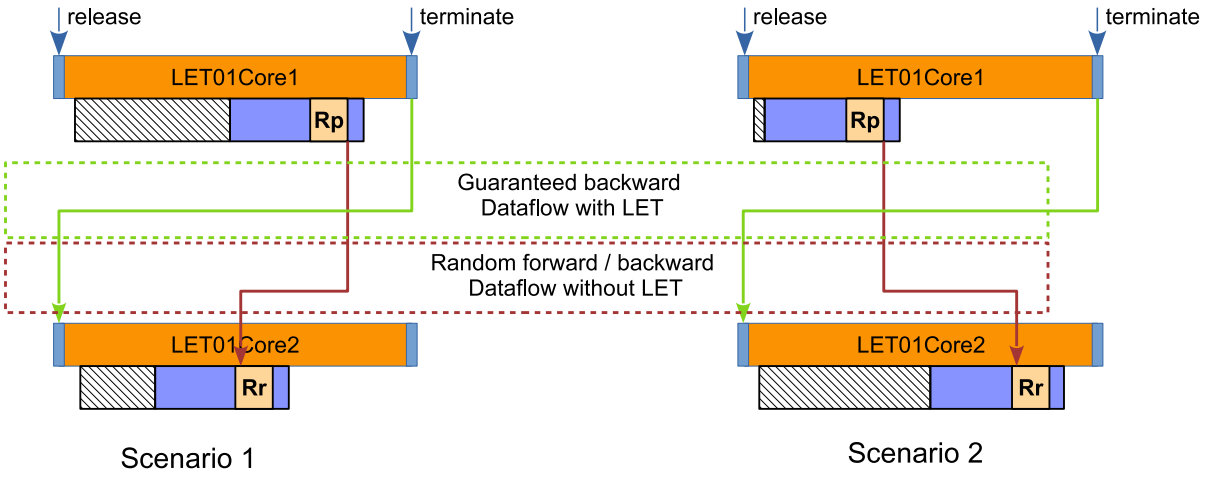

Figure 4.4: LET based communication versus classical communication

Figure 4.4 illustrates a simple data flow between two Runnables `Rp` and `Rr`. For simplicity, it is assumed that both are executed on OS Tasks executed on different cores, but similar situations can also occur in preemptive systems on the same core. The point in time, at which they finish executing, jitters, which is shown by the hatched area. In Scenario 1, `Rp` is executed after `Rr`. Hence, `Rc` observes the values from `Rp`'s

execution N-1 (also called backward data flow). In Scenario 2, Rp is executed before Rr. Hence, Rc observes the values from Rp's actual execution N (also called forward data flow). With the application of LET, for both scenarios a deterministic backward data flow is guaranteed.

4.8 Service Oriented Communication in Software Clusters

Changing requirements or general software rework may require a Software Cluster to offer- and or consume additional or different SomeIPEvents or SomeIPMethods. In contrast to conventional signal based communication, the PDUs which contain the serialized SomeIPEvents / SomeIPMethod-arguments respectively return values are actively controlled by mode management. This means that only after requesting a service, the PDU is actually transported from- and to the application SW-C via the BSW stack. Changes in the set of SomeIPEvents or SomeIPMethods that a Software Cluster provides or consumes hence require changes in the mode management. When it is not possible or desirable to build a new version of the Host Software Cluster, changes can also brought in by a mix of pre-prepared configuration elements and post-build configuration of the Host Software Cluster. Since the general pattern in mode management is identical for all service oriented communication, parts can be re-used. Configuration elements that have to be created already during initial configuration(pre-compile) are:

- A set of wildcard BswMModeRequest- and BswMSwitchPort for new SomeIPEvents or SomeIPMethods. These ports exist to already have the possibility to issue- and receive mode changes. Initially, they are not used. Later on, modes bound to specific SomeIPEvents or SomeIPMethods are assigned to them.
- The BswMRules and BswMLogicalExpressions which evaluate the modes set by the wildcard BswMModeRequestPort
- All potential BswMActions to request- and release the Sd SomeIPEvent or SomeIPMethod states.
- The BswM mode declaration groups relevant for service oriented communication

The actual modification is a post-build modification of the BswMActionLists. Here BswM actions can be added- and/or removed that:

- request SomeIPEvents or SomeIPMethods.
- bind a mode change to one of the wildcard BswMSwitchPorts

4.9 Design hints for clustered systems

Since the Software Cluster concept builds on existing technologies and concepts, introducing them adds only few additional design considerations.

If a cross cluster interface cannot be connected, the RTE method call (for example Rte_IRead) will return RTE_E_UNCONNECTED and the output value will be the ComSpec.initValue (for example NonqueuedSenderComSpec.initValue).

The notion that required ports might not be connected, already exists in systems that do not use Software Clusters. However, in some domains, this behavior is not used and some developers might assume that the interfaces they require are always present. It is therefore important to evaluate the impact of unconnected interfaces on those Software Components, who participate in cross cluster communication.

There are three ways, in which this can affect a Software Component:

1. The SW-C is not affected, if the input value is the init value. In this case, the SW-C can be used as-is. Example: the init value is a reserved value with neutral behavior.
2. The SW-C can function with the input value, but has to distinguish between the init value and other values. In this case, the SW-C should react to the RTE_E_UNCONNECTED return value. Example: the init value is a maximum value and the component should not use this value in its calculations.
3. The SW-C cannot function without the input value. In this case, the attribute CpSoftwareClusterResource.isMandatory should be set for the corresponding resource.

In the last case, [SWS_SwCluC_00050] specifies that, if a single mandatory interface on a Software Component cannot be connected, the whole cluster containing that Software Component will stay unconnected. This avoids situations, in which the Software Components integrated in a Software Cluster work with partly alive interfaces. It also avoids consecutive faults, for example if the reading Software Component calculates a faulty output value that is then read by another Software Component.

The CpSoftwareClusterResource.isMandatory attribute is set at system design time, when assigning Software Components to Clusters. It might also be required to convey this information at component design or implementation time. To indicate this, VariableAccess.scope can be set to communicationIntraPartition.

It is recommended that architecture tools warn, if VariableAccess.scope is set to communicationIntraPartition, but CpSoftwareClusterResource.isMandatory is not set.

Sidenote: Since Software Clusters can share EcucPartitions, it is possible that some cross cluster communication happens within the same partition (cross-cluser, but intra-partition). Therefore, there is a slight semantic difference between cross partition and cross cluster. However, due to the flexibility introduced by software clusters, it is generally not possible to assure that a cross cluster interface will never cross a partition border. So it should be assumed that cross cluster communication might potentially also be cross partition. Therefore, it was decided to use the existing

value communicationIntraPartition, instead of introducing a special value for communication within a cluster.

4.10 Mode Management in a clustered AUTOSAR ECU

The current version of the AUTOSAR BSW module, SwCluC, currently lacks a dedicated specifcation of an EcuM or BswM proxy module. Nonetheless, the specification encompasses features that enable mode communication across Software Cluster boundaries. Consequently, mode requests initiated by Application Software Clusters targeting the Host Software Cluster can be realized through the existing sender-receiver communication feature. (See [5] Chapter 7.3.3 *"Sender Receiver Communication"*). Conversely, the modes facilitated by the BSW Mode Manager can be relayed to Application Software Clusters using the mode communication functionality. (See [5] Chapter 7.3.6 *"Modes Communication"*)

This process may necessitate manual intervention by an ECU integrator to connect modeRequestPorts and modeNotificationPorts effectively. Given that mode switch ports can potentially influence the ECU's scheduling, a thorough analysis by the ECU integrator is imperative prior to integrating additional modes into the BswM configuration. For example, if mode switches are used to schedule runnables, supplementary OS tasks and dispatchers might be required.

Moreover, it should be noted that the scheduling of dispatcher runnables might also be affected by modes, in accordance with the parameter SwCluCOsProxyDisabledModeInstanceRef. Under such configurations, mode switches within the Host Software Cluster can alter the scheduling dynamics for the Software Clusters, even without direct mode communication to the Application Software Clusters.

Regarding WdgM modes, the specification of the AUTOSAR BSW module SwCluC assumes these modes are exclusively changed by the Host Software Cluster.

5 Software Clusters Example

5.1 Overview of the example system

The figure below shows an example of system model which consists of 2 `Software Clusters`.

The ARXML for this example is given in the listings in the Section A.

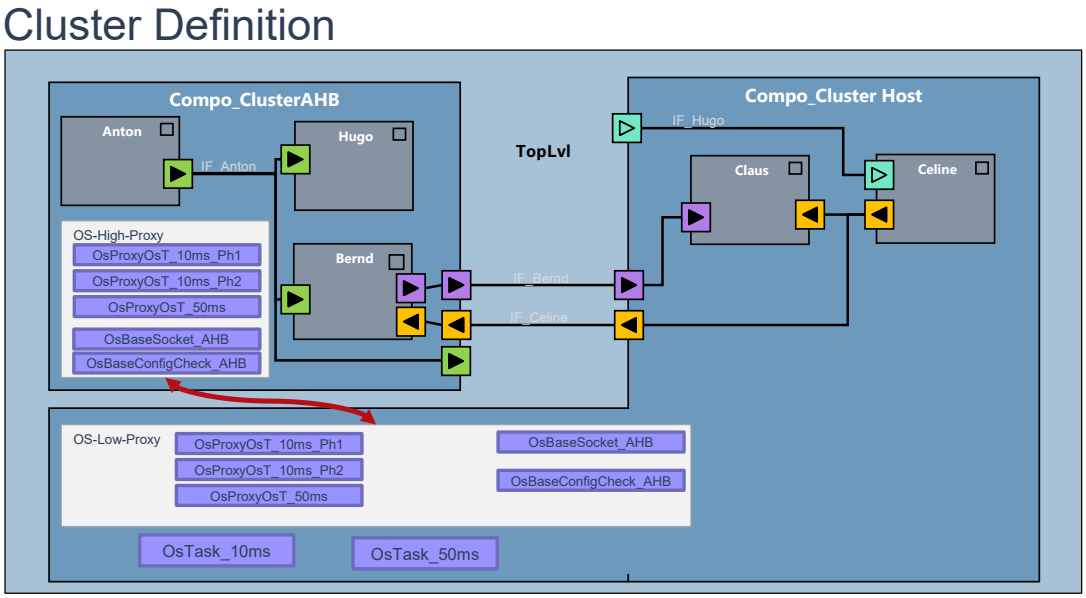

Figure 5.1: Overview of the example model

The example consists of 2 `Software Compositions`:

- Compo_AHB, with 3 `Software Components`: Anton, Hugo and Bernd
- Compo_Host, with 2 `Software Components`: Claus and Celine

Each of them have Providing and Requiring Ports, some of which are connected on Top-Level view.

There are 2 `Software Clusters`:

- SwClu_AHB, which contains Compo_AHB
- SwClu_Host, which contains Compo_Host

They are described separately, based on the neccessary System Elements. Of course, in a real system, a cluster would usually contain several `Software Compositions`.

5.2 Interfaces

As shown in figure 5.1, the 2 `Software Clusters` have the following interfaces:

- IF_Celine; ports connected from SwClu_Host to SwClu_AHB
- IF_Bernd; ports connected from SwClu_AHB to SwClu_Host
- IF_Hugo; open requiring port on SwClu_Host
- IF_Anton; open providing port on SwClu_AHB

Figure 5.1 also shows the relevant service dependencies, through which a properly configured `Host Software Cluster` and its operating system can run the `Software Cluster` AHB.

5.3 Os Proxy configuration

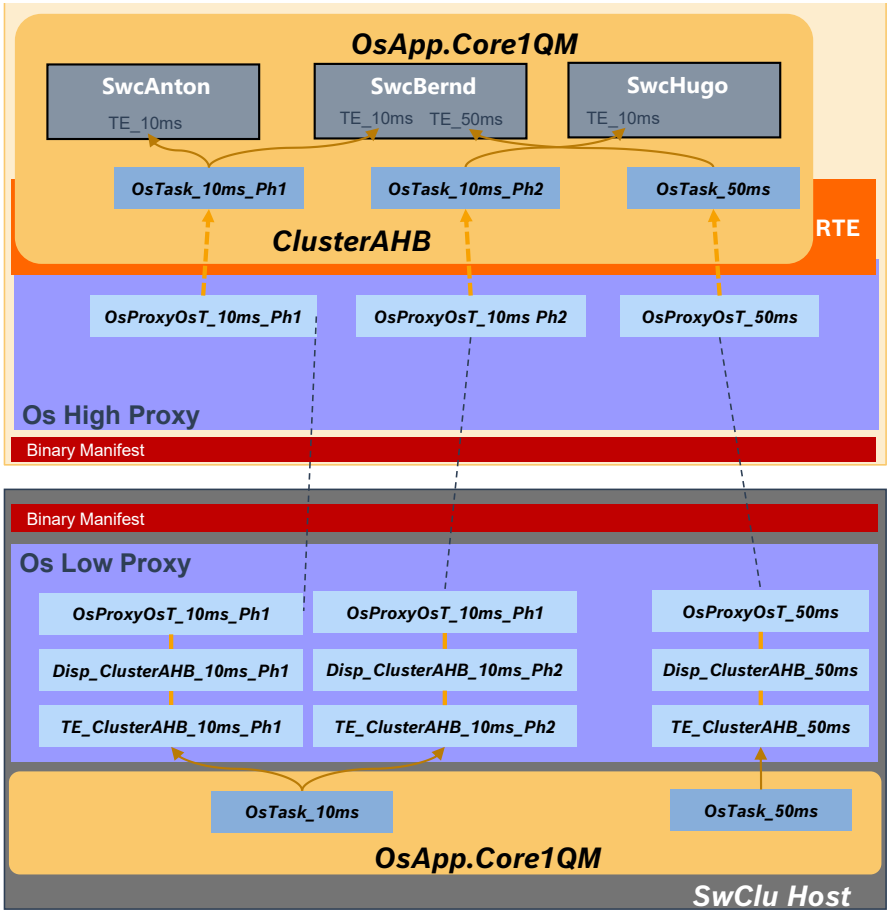

Figure 5.2: Os Proxy configuration example

For the required Os Services, the proxy pattern for Os is used. Figure 5.2 shows the configuration for the Os High and Low Proxy.

In that example, the host configuration consists of 2 OsTasks: OsTask_50ms and OsTask_10ms. The 10ms task is split into two phases, leading to 3 SwCluCOsProxyOsTasks: OsProxyOsT_10ms_Ph1, OsProxyOsT_10ms_Ph2, OsProxyOsT_50ms. In the Host Software Cluster, each of the SwCluCOsProxyOsTasks has a so called Dispatcher. For each dispatcher, a Runnable and an RTEEvent is generated, which has to be scheduled in the host's OsTask. The event triggers the runnable, which will call the corresponding task body in the Application Software Cluster via the binary manifest.

In the Application Software Cluster AHB, there is a local implementation for the Os, following the Os High Proxy pattern. There are 3 SwCluCOsProxyOsTask: OsProxyOsT_10ms_Ph1, OsProxyOsT_10ms_Ph2 and OsProxyOsT_50ms. Each of them has a corresponding Os task: OsTask_10ms_Ph1, OsTask_10ms_Ph2, OsTask_50ms. The matching timing events, from the Software Component's TimingEvents, are mapped to these proxy tasks.

Figure 5.2 does not show the OsBaseSocket_AHB and OsBaseConfigCheck_AHB. The OsBaseSocket_AHB is used for initial setup of the Software Cluster's AHB local OsProxy. The OsBaseConfigCheck_AHB is used to ensure that the configuration, implemented by the Host Software Cluster, fulfills the needs of the Software Cluster AHB.

All dependencies between the Software Clusters are described in the CpSoftwareClusterResourcePool. In this example, there are Communication-Resources based on the S/R Ports, Service-Resources for the Os and configuration dependencies.

With all these settings, the system design for this example is complete. As mentioned in the beginning, the corresponding system model can be found in the Section A.

5.4 Example Extract of Software Clusters

Based on the example system Model, it is possible to generate a cluster extract of the two Software Clusters SwClu_Host and SwClu_AHB. Through this step, the system will be split into two separate parts:

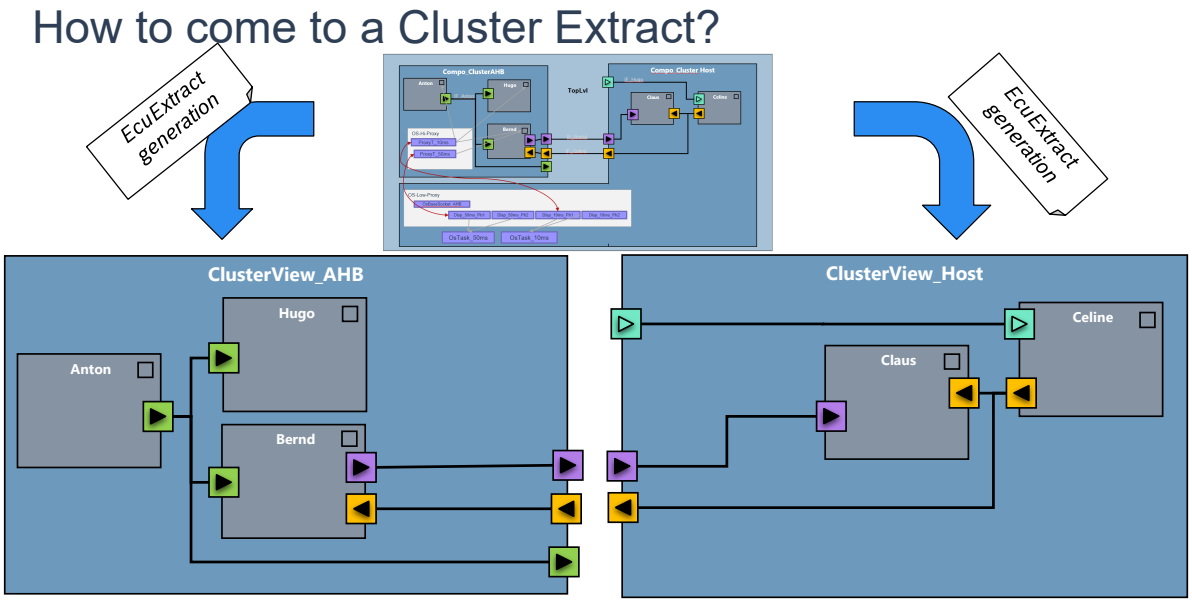

Figure 5.3: Overview of the Software Cluster Extract

Similar to the EcuExtract mechanism, each `Software Cluster` will be extracted from the system, and described on its own. In addition to that, the dependencies are referenced from the common RessourcePool. The main parts of such an extract are:

- Software Components
- Software Compositions
- Toplevel Root Composition
- Software Clusters
- COM-Resources
- CpSoftwareClusterServiceResource
- Service-Needs

with their corresponding mappings. The first three items are already present for an EcuExtract, while the rest is specific to `Software Clusters`.

This concept uses the analogy to the EcuExtract mechanism, as the task is basically the same. The aim was that it should be possible to reuse the currently available tools and toolchains for configuration and generation, with only minor changes.

In the example model, you can find ARXML-examples for each `Software Cluster`.

5.5 Example Configuration of ECUC

To enable the generation and implementation of the service layer of a `Software Cluster`, also new ECU Configuration elements (EcuC) are introduced with this concept. In this example, the configuration describes the settings of the `Os High Proxy` and the BinaryManifest, as well as the attributes of the `Software Clusters` itself. Such attributes could be: the type of the `Software Clusters`, its connection settings, or settings needed by the build environment, like compiler flags. It also configures the `Software Cluster Communications` Layer, e.g. whether or not it is implementated via RIPS-plugin.

5.6 ECUC Configuration of Os High Proxy

The example ARXMLs show a basic configuration of the `Os High Proxy`, which consists of the Os Task configuration for the proxy-tasks OsTask_10ms_Ph1, OsTask_10ms_Ph2 and OsTask_50ms, and their settings for Priority, Period, Schedule and Activation. Also, an OsApplication "Core1QM" is configured there, to define the same context for both tasks.

5.7 File overview

To ease the creation and maintenance of the example, the model is split into several files. In addition, this file split is used to compose the mode to the different steps in the methodology. The table describes which files have to be used to get the complete model of a methodology step.

	Component Models	Resource Pool	ECU_SYSTEM_DESCRIPTION	SW_CLUSTER_SYSTEM_DESCRIPTION Host	SW_CLUSTER_SYSTEM_DESCRIPTION AHB	ECU configuration AHB
PlatformBase_Types.arxml	x		x	x	x	
Platform_Types.arxml	x		x	x	x	
DOC_SwCluC_SwcAnton_SWCD.arxml	x		x	x	x	
DOC_SwCluC_SwcBernd_SWCD.arxml	x		x	x	x	
DOC_SwCluC_SwcHugo_SWCD.arxml	x		x	x	x	
DOC_SwCluC_SwcCeline_SWCD.arxml	x		x	x	x	
DOC_SwCluC_SwcClaus_SWCD.arxml	x		x	x	x	
DOC_SwCluC_SwcCompoAHB_SWCD.arxml	x		x	x	x	
DOC_SwCluC_SwcCompoHost_SWCD.arxml	x		x	x	x	
DOC_SwCluC_Sys_TopLvl_SWCD.arxml	x		x	x	x	
DOC_SwCluC_Sys_SwClusters.arxml			x	x	x	
DOC_SwCluC_Sys_Descr_TopLvl.arxml			x			
DOC_SwCluC_Sys_HWT.arxml			x	x	x	
DOC_SwCluC_Sys_ResPoolCommunicationResources.arxml		x	x	x	x	
DOC_SwCluC_Sys_ResPoolServiceResources.arxml		x	x	x	x	
DOC_SwCluC_Sys_ResPoolServiceResourceNeeds.arxml		x	x	x	x	
DOC_SwCluC_Sys_Extr_Host.arxml				x		
DOC_SwCluC_Sys_Extr_TopLvl_SWCD_Host.arxml				x		
DOC_SwCluC_Sys_Extr_AHB.arxml					x	
DOC_SwCluC_Sys_Extr_TopLvl_SWCD_AHB.arxml					x	
DOC_SwCluC_Ecuc_EcuC_AHB.arxml						x
DOC_SwCluC_Ecuc_Os_AHB.arxml						x
DOC_SwCluC_Ecuc_SwCluC_AHB.arxml						x
AUTOSAR_MOD_ECUConfigurationParameters.arxml		x	x	x	x	x

Table 5.1: Mapping of files to methodology steps

5.8 From model to code

This section shall illustrate how the AUTOSAR model of a `Software Cluster` is handled over the different methodology steps, and finally processed in the code.

5.8.1 Rte and RIPS

As previously described, three Software Components are integrated in the Software Cluster AHB:

- SwcAnton (DOC_SwCluC_SwcAnton_SWCD.arxml)
- SwcBernd (DOC_SwCluC_SwcBernd_SWCD.arxml)
- SwcHugo (DOC_SwCluC_SwcHugo_SWCD.arxml)

All are instantiated in the CompositionSwComponentType SwcCompoAHB (DOC_SwCluC_SwcCompoAHB_SWCD.arxml) that is used to describe the application software of AHB. A CpSoftwareCluster.swComponentAssignment exists for SwClu_AHB (DOC_SwCluC_Sys_SwClusters.arxml).

From these Software Components, three dataElements in the ports

- RP_Celine, dataElement Celine
- PP_Bernd, dataElement Bernd
- PP_Anton, dataElement Anton

are delegated by SwcCompoAHB.

For each dataElement, a CpSoftwareClusterCommunicationResource (DOC_SwCluC_Sys_ResPoolServiceResources.arxml) describes the Software Cluster related properties.

In the ECU_SYSTEM_DESCRIPTION System_TopLvl (DOC_SwCluC_Sys_Descr_TopLvl.arxml), the according dataElement instances are mapped via a PortElementToCommunicationResourceMapping. In the ECU_SYSTEM_DESCRIPTION System_TopLvl, the mapping is consistently defined at the PPortPrototype side, if a PPortPrototype is available in a Data Communication Graph.
Please note dataElement Celine, mapped at PP_Celine of SwcCompoHost.

In the SW_CLUSTER_SYSTEM_DESCRIPTION AHB (DOC_SwCluC_Sys_Extr_Host.arxml) - which is an extract of ECU_SYSTEM_DESCRIPTION System_TopLvl - the mappings are transformed to the PortPrototypes, which are available in the scope of Software Cluster AHB.
Please note dataElement Celine, mapped now at RP_Celine of SwcCompoAHB.

In the ECU configuration phase of Software Cluster AHB, the Data Communication Graphs of the dataElements Celine, Bernd, and Anton are assigned to the Cross Software Cluster Communication Plug-In Gr8Xcc.

Due to this configuration, the according RTE APIs are using the RTE Implementation Plug-In Services, when communication cross Cross Software Clusters.

Example 5.1

Rte_Write in software component SwcAnton:

```
Std_ReturnType Rte_Write_SwcAnton_PP_Anton_Anton(Type_Anton data)
{
    Std_ReturnType status = RTE_E_OK;

    /* write to Software Cluster local communication buffer */
    Rte_Buffer_000000_Anton = data;

    /* write to Xcc Plug-In */
    status = Rte_Rips_Gr8Xcc_Write_SwcAnton_CGI_Anton(data);

    return status;
}
```

or

Example 5.2

Rte_DRead in software component SwcBernd:

```
Type_Celine Rte_DRead_SwcBernd_RP_Celine_Celine(void)
{
  return Rte_Rips_Gr8Xcc_DRead_SwcBernd_CGI_Celine();
}
```

The Gr8Xcc Cross Software Cluster Communication Plug-In can implement the related RTE Implementation Plug-In Services as follows:

Example 5.3

Rte_Rips_Write in Cross Software Cluster Communication Plug-In Gr8Xcc:

```
Std_ReturnType Rte_Rips_Gr8Xcc_Write_SwcAnton_CGI_Anton(
    Rte_Rips_GlobalCopy_CGI_Anton_Type data)
{
  Std_ReturnType status = RTE_E_OK;

  /* sendIndication = none, no indication of send operations */
  SwCluC_Xcc_Buffer_Anton = data;
  /* writing data is always successful */
  return status;


}
```

The Rte_Rips_Write updates the data buffer used for cross cluster communication:

Example 5.4

```
Rte_Rips_GlobalCopy_CGI_Bernd_Type SwCluC_Xcc_Buffer_Bernd = 123u;
```

In case of reading the data, the relation to the Binary Manifest becomes also visible in the source code:

Example 5.5

Rte_Rips_DRead in Cross Software Cluster Communication Plug-In Gr8Xcc:

```
1 Rte_Rips_GlobalCopy_CGI_Celine_Type
      Rte_Rips_Gr8Xcc_DRead_SwcBernd_CGI_Celine()
2 {
3   return *((Rte_Rips_GlobalCopy_CGI_Celine_Type *)
        SwCluC_BManif_GetHandle_rXccBasicSR_Celine_dataBuffer());
4 }
```

Please note that Rte_Rips_DRead just takes the data reference from Binary Manifest, without checking if the related Resource Entry in the Binary Manifest is connected to another Software Cluster.

This is possible, since the Cross Software Cluster Communication Plug-In creates a default data instance, and puts this as a default data value into the Binary Manifest.

Example 5.6

Default data instance Cross Software Cluster Communication Plug-In Gr8Xcc:

```
1 const Rte_Rips_GlobalCopy_CGI_Celine_Type SwCluC_Xcc_Default_Celine =
      42;
```

Therefore, the SwCluC_BManif_GetHandle API either returns the reference to the data buffer in the connected Software Cluster, or the reference to the default data instance of the own Software Cluster AHB, in case no connection was possible.

It is the task of the Cross Software Cluster Communication Plug-In functionality, to configure the Resource Entries needed in the Binary Manifest, so that the Cross Software Cluster Communication works. Such a configuration is shown in DOC_SwCluC_Ecuc_SwCluC_AHB.arxml.

5.8.2 Binary Manifest

To save some space, PROVIDED is abbreaviated as PRO, REQUIRED as REQ, OsProxyOsTask and OsProxyOsT as OsPT, mandatory as MAND, Global ResourceId as GID

5.8.2.1 Interface Descriptor Table of Cluster_AHB

Example 5.7

`Interface Descriptor Table` for

- Send/Receive Ports `Anton`, `Bernd`, `Celine`,
- `OsTasks` `OsTask_10ms`, `OsTask_50ms`

```
const SwCluC_BManif_ResourcePropertiesType
    SwCluC_BManif_ResourcePropertiesDescriptorColumn[
    SWCLUC_BMANIF_NO_OF_DESCRIPTORS] =
{
  0x80,  /* PRO (Anton),  N/A, S/R, GID = 0xDA1A0001 */
  0x80,  /* PRO (Bernd),  N/A, S/R, GID = 0xDA1A0002 */
  0x00,  /* REQ (Celine), N/A, S/R, GID = 0xDA1A0003 */
  0x40,  /* REQ (OsPT_10ms_Ph1), MAND, OsPT, GID = 0x05000005 */
  0x40,  /* REQ (OsPT_10ms_Ph2), MAND, OsPT, GID = 0x05000004 */
  0x40,  /* REQ (OsPT_50ms), MAND, OsPT, GID = 0x05000003 */
};

/* descriptor table column for resource type Ids */
const SwCluC_BManif_ResourceTypeIdType
    SwCluC_BManif_ResourceTypeIdDescriptorColumn[
    SWCLUC_BMANIF_NO_OF_DESCRIPTORS] =
{
  0x01u, /* PRO (Anton),  N/A, S/R, GID = 0xDA1A0001 */
  0x01u, /* PRO (Bernd),  N/A, S/R, GID = 0xDA1A0002 */
  0x01u, /* REQ (Celine), N/A, S/R, GID = 0xDA1A0003 */
  0x03u, /* REQ (OsPT_10ms_Ph1), MAND, OsPT, GID = 0x05000005 */
  0x03u, /* REQ (OsPT_10ms_Ph2), MAND, OsPT, GID = 0x05000004 */
  0x03u, /* REQ (OsPT_50ms), MAND, OsPT, GID = 0x05000003 */
};

const SwCluC_BManif_GlobalResourceIdType
    SwCluC_BManif_GlobalResourceIdDescriptorColumn[
    SWCLUC_BMANIF_NO_OF_DESCRIPTORS] =
{
  0xDA1A0001,  /* PRO (Anton),  N/A, S/R, GID = 0xDA1A0001 */
  0xDA1A0002,  /* PRO (Bernd),  N/A, S/R, GID = 0xDA1A0002 */
  0xDA1A0003,  /* REQ (Celine), N/A, S/R, GID = 0xDA1A0003 */
  0x05000005,  /* REQ (OsPT_10ms_Ph1), MAND, OsPT, GID = 0x05000005 */
  0x05000004,  /* REQ (OsPT_10ms_Ph2), MAND, OsPT, GID = 0x05000004 */
  0x05000003,  /* REQ (OsPT_50ms), MAND, OsPT, GID = 0x05000003 */
};

const SwCluC_BManif_ResourceGuardValueType
    SwCluC_BManif_ResourceGuardValueDescriptorColumn[
    SWCLUC_BMANIF_NO_OF_DESCRIPTORS] =
{
  0x0001DD21, /* PRO (Anton),  N/A, S/R, GID = 0xDA1A0001 */
  0x0001E2FD, /* PRO (Bernd),  N/A, S/R, GID = 0xDA1A0002 */
  0x19D1C26F, /* REQ (Celine), N/A, S/R, GID = 0xDA1A0003 */
  0x0006F84A, /* REQ (OsPT_10ms_Ph1), MAND, OsPT, GID = 0x05000005 */
  0x0006F83F, /* REQ (OsPT_10ms_Ph2), MAND, OsPT, GID = 0x05000004 */
  0x0006F855, /* REQ (OsPT_50ms), MAND, OsPT, GID = 0x05000003 */
};

```

```
42 const SwCluC_BManif_TableIndexType
       SwCluC_BManif_OfferedInterfaceIndexDescriptorColumn[
       SWCLUC_BMANIF_NO_OF_DESCRIPTORS] =
43 {
44   0,                              /* PRO (Anton),  N/A, S/R, GID = 0
         xDA1A0001 */
45   1,                              /* PRO (Bernd),  N/A, S/R, GID = 0
         xDA1A0002 */
46   SWCLUC_BMANIF_NO_TABLE_ENTRY, /* REQ (Celine), N/A, S/R, GID = 0
         xDA1A0003 */
47   SWCLUC_BMANIF_NO_TABLE_ENTRY, /* REQ (OsPT_10ms_Ph1), MAND, OsPT, GID
          = 0x05000005 */
48   SWCLUC_BMANIF_NO_TABLE_ENTRY, /* REQ (OsPT_10ms_Ph2), MAND, OsPT, GID
          = 0x05000004 */
49   SWCLUC_BMANIF_NO_TABLE_ENTRY, /* REQ (OsPT_50ms), MAND, OsPT, GID = 0
         x05000003 */
50 };
51
52 const SwCluC_BManif_HandleIndexType
       SwCluC_BManif_OfferedInterfaceNoOfHandlesDescriptorColumn[
       SWCLUC_BMANIF_NO_OF_DESCRIPTORS] =
53 {
54   0x01u, /* PRO (Anton),  N/A, S/R, GID = 0xDA1A0001 */
55   0x01u, /* PRO (Bernd),  N/A, S/R, GID = 0xDA1A0002 */
56   0x00u, /* REQ (Celine), N/A, S/R, GID = 0xDA1A0003 */
57   0x00u, /* REQ (OsPT_10ms_Ph1), MAND, OsPT, GID = 0x05000005 */
58   0x00u, /* REQ (OsPT_10ms_Ph2), MAND, OsPT, GID = 0x05000004 */
59   0x00u, /* REQ (OsPT_50ms), MAND, OsPT, GID = 0x05000003 */
60 };
61
62 const SwCluC_BManif_TableIndexType
       SwCluC_BManif_SubscribedInterfaceIndexDescriptorColumn[
       SWCLUC_BMANIF_NO_OF_DESCRIPTORS] =
63 {
64   SWCLUC_BMANIF_NO_TABLE_ENTRY, /* PRO (Anton),  N/A, S/R, GID = 0
         xDA1A0001 */
65   SWCLUC_BMANIF_NO_TABLE_ENTRY, /* PRO (Bernd),  N/A, S/R, GID = 0
         xDA1A0002 */
66   0x00u,                          /* REQ (Celine), N/A, S/R, GID = 0
         xDA1A0003 */
67   0x01u,                          /* REQ (OsPT_10ms_Ph1), MAND, OsPT, GID
          = 0x05000005 */
68   0x02u,                          /* REQ (OsPT_10ms_Ph2), MAND, OsPT, GID
          = 0x05000004 */
69   0x03u,                          /* REQ (OsPT_50ms), MAND, OsPT, GID = 0
         x05000003 */
70 };
71
72 const SwCluC_BManif_HandleIndexType
       SwCluC_BManif_SubscribedInterfaceNoOfHandlesDescriptorColumn[
       SWCLUC_BMANIF_NO_OF_DESCRIPTORS] =
73 {
74   0x00, /* PRO (Anton),  N/A, S/R, GID = 0xDA1A0001 */
75   0x00, /* PRO (Bernd),  N/A, S/R, GID = 0xDA1A0002 */
76   0x01, /* REQ (Celine), N/A, S/R, GID = 0xDA1A0003 */
```

```
77    0x01, /* REQ (OsPT_10ms_Ph1), MAND, OsPT, GID = 0x05000005 */
78    0x01, /* REQ (OsPT_10ms_Ph2), MAND, OsPT, GID = 0x05000004 */
79    0x01, /* REQ (OsPT_50ms), MAND, OsPT, GID = 0x05000003 */
80  };
81
82  const SwCluC_BManif_HandleIndexType
        SwCluC_BManif_SubscribedInterfaceNoOfHandleSetsDescriptorColumn[
        SWCLUC_BMANIF_NO_OF_DESCRIPTORS] =
83  {
84    0x00, /* PRO (Anton),  N/A, S/R, GID = 0xDA1A0001 */
85    0x00, /* PRO (Bernd),  N/A, S/R, GID = 0xDA1A0002 */
86    0x00, /* REQ (Celine), N/A, S/R, GID = 0xDA1A0003 */
87    0x00, /* REQ (OsPT_10ms_Ph1), MAND, OsPT, GID = 0x05000005 */
88    0x00, /* REQ (OsPT_10ms_Ph2), MAND, OsPT, GID = 0x05000004 */
89    0x00, /* REQ (OsPT_50ms), MAND, OsPT, GID = 0x05000003 */
90  };
```

Please note the addressing of the `Interface Descriptor Table` into the related row of the `Offered Interface Table` and `Subscribed Interface Table`.

In this example:

- Resource `Anton`
  - is provided (line 3), and of type Sender/Receiver (line 14)
  - has one handle in the OfferedInterface (line 54), which occupies the first row in the `Offered Interface Table` (line 44, OfferedInterfaceIndex = 0)
  - has no handle in the Subscribed interface (SubscribedInterfaceNoOfHandles = 0, line 74, and SubscribedInterfaceIndex = SWCLUC_BMANIF_NO_TABLE_ENTRY, line 64).
- Resource `Celine`
  - is required (line 5), and of type Sender/Receiver (line 16)
  - has no handle in the OfferedInterface (OfferedInterfaceNoOfHandles = 0, line 56, and OfferedInterfaceIndex = SWCLUC_BMANIF_NO_TABLE_ENTRY, line 46)
  - has one handle in the SubscribedInterface (line 76), which occupies the first row in the `Subscribed Interface Table` (line 66).

5.8.2.2 Offered Interface Table of Cluster_AHB

Example 5.8

`Offered Interface Table` for `Anton`, `Bernd`, `OsProxyOsT_10ms_Ph1`, `OsProxyOsT_10ms_Ph2`, `OsProxyOsT_50ms`

```
const SwCluC_BManif_HandleType
    SwCluC_BManif_OfferedInterfaceHandleColumn[
    SWCLUC_BMANIF_NO_OF_OFFERED_HANDLES] =
{
  { .dptr = (void *) &SwCluC_Xcc_Buffer_Anton },  /* PRO (Anton),  N/A,
      S/R, GID = 0xDA1A0001 */
  { .dptr = (void *) &SwCluC_Xcc_Buffer_Bernd },  /* PRO (Bernd),  N/A,
      S/R, GID = 0xDA1A0002 */
  { .fptr = (SwCluC_BManif_VoidFncPtrType) OsTask_10ms_Ph1 },  /* REQ (
      OsPT_10ms_Ph1), MANDATORY, OsPT, GID = 0x05000005 */
  { .fptr = (SwCluC_BManif_VoidFncPtrType) OsTask_10ms_Ph2 },  /* REQ (
      OsPT_10ms_Ph2), MANDATORY, OsPT, GID = 0x05000004 */
  { .fptr = (SwCluC_BManif_VoidFncPtrType) OsTask_50ms }   /* REQ (
      OsPT_50ms), MANDATORY, OsPT, GID = 0x05000003 */
};
```

In the `Offered Interface Table`, the data buffers for `Anton` and `Bernd` are offered for other `Software Clusters`.

Note that the binary manifest entry for the `SwCluCOsProxyOsTask` points to the `OsTask` body generated by the Rte in the `Application Software Cluster`. The `Dispatcher` Runnable in the `Host Software Cluster` uses the binary manifest to directly call the `OsTask` in the `Application Software Cluster`.

5.8.2.3 Subscribed Interface Table of Cluster_AHB

Example 5.9

`Subscribed Interface Table` for `Celine`

```
const SwCluC_BManif_HandleType
    SwCluC_BManif_SubscribedInterfaceDefaultHandleColumn[
    SWCLUC_BMANIF_NO_OF_SUBSCRIBED_HANDLES] =
{
  { .dptr = (void *) &SwCluC_Xcc_Default_Celine },  /* REQ (Celine), N/
      A, S/R, GID = 0xDA1A0003 */
};

const SwCluC_BManif_HandleType
    SwCluC_BManif_SubscribedInterfaceHandleColumn[
    SWCLUC_BMANIF_NO_OF_SUBSCRIBED_HANDLES] =
{
  { .dptr = (void *) &SwCluC_Xcc_Default_Celine },  /* REQ (Celine), N/
      A, S/R, GID = 0xDA1A0003 */
};

const SwCluC_BManif_SwClusterIdType
    SwCluC_BManif_SubscribedInterfaceConnectedSwClusterIdColumn[
    SWCLUC_BMANIF_NO_OF_SUBSCRIBED_HANDLES] =
{
  SWCLUC_BMANIF_SWCL_ID_UNCONNECTED,  /* REQ (Celine), N/A, S/R, GID =
      0xDA1A0003 */
```

```
14  };
```

In the Subscribed Interface Table, the default data instance for Celine is set. This ensures that the inital value is read, in case no connection to another Software Cluster is possible.

5.8.3 SwCluCOsProxyMaxNumberOfCallee - using one OsProxyOsTask to schedule multiple clusters

The examples so far showed a single cluster. If there is more than one cluster, there is a choice in the Os Proxy configuration: It's possible to either configure a separate SwCluCOsProxyOsTask for each cluster, or to share one SwCluCOsProxyOsTask between multiple clusters. Note that it's not possible to call the same cluster twice from one host SwCluCOsProxyOsTask / Dispatcher Runnable. So in the previous example, it's not possible to use a single 10ms SwCluCOsProxyOsTask in the host and call the two 10ms phases in Cluster_AHB.

When multiple clusters are called from a single Dispatcher Runnable, the order in which the clusters are called is fixed. It depends on the order of handles in the table, which are sorted by Software Cluster Id (see [SWS_SwCluC_00045]). Configuring separate SwCluCOsProxyOsTasks requires more configuration, but allows for a fully flexible scheduling. If a configuration requires additional flexibility that results in a task that is split into phases, then it's likely that such a configuration will use separate SwCluCOsProxyOsTasks for these task phases, and have SwCluCOsProxyMaxNumberOfCallee set to 1 (or not set).

We could add another cluster called Cluster_Two to the previous example, which only uses OsProxyOsT_50ms. Disp_ClusterAHB_50ms will be renamed to Disp_Clusters_50ms and SwCluCOsProxyMaxNumberOfCallee set to 2. This will not change the binary manifest of Cluster_AHB. In the Host Software Cluster, this will use the Notifier Handle Set mechanism. OsProxyOsT_50ms will use 2 handle sets (the corresponding entry in SwCluC_BManif_SubscribedInterfaceNoOfHandleSetsDescriptorColumn will have the value 2). Instead of a single handle, it will now have 2*1 + 1 = 3 handles (the corresponding entry in SwCluC_BManif_OfferedInterfaceNoOfHandlesDescriptorColumn will have the value 3). The first entry stores the number of used slots, the second and third slots can be used to call up to two clusters.

6 Limitations and Restrictions

6.1 Out of scope topics

6.1.1 Securing the Binary Objects

Securing the Binary Objects against unauthorized modification (e.g. signature checks during flash).

Rationale: This is not in scope of CP platform in general.

6.1.2 Standardization of hypervisor solutions

Standardization of hypervisor solutions to implement multiple machines one micro controller.

Rationale: There are already existing solutions on the market.

6.1.3 Mere build time optimization

The concept does not target projects that just want to do build time optimization. While it is possible to use the concept to reuse already built parts and thereby reduce build times, it is not designed with this usecase in mind. The scenario that a local integration just uses Software Clusters as independent build units, but keeps the full static and dynamic dependencies between them, is not considered.

The build time reduction will be accompanied by some overhead in memory consumption and runtime, since the concept has to solve the additional requirements for a distributed and independent development and integration. If the flexibility introduced by Software Clusters is not required, and the goal is just to reuse parts of a build, other solutions can be designed that have less (or maybe even no) overhead at run time.

To summarize: Using the concept in this way is possible, but not recommended.

6.1.4 Easy deactivation of Software Clusters

The solution of AUTOASR to support Software Clusters in the Classic Platform is not designed in a way that clustering can be disabled, or that a clustered system can easily be turned back into a non-clustered system. Simply put: there is no off switch.

Rationale: This is not possible since separate build units support:

- different lib versions
- separate name spaces for compiler / linker
- multi instances of regular BSW modules (e.g. Dem/Dcm/Fim)

If such benefits are used, a simple fall back to a common large-scale integration is technically not possible.

Example: If a project uses different versions of a library in different clusters, the project can no longer be compiled and linked as a single build unit, since the single definition rule is violated. If such a project were to be turned back into an unclustered system, it would first be neccessary to consolidate the different library versions to a single version.

Nonetheless, by setting the bit `SWCLUC_BMANIF_DISABLE_ON_ECU_CONNECTION`, defined in [SWS_SwCluC_00056], on the `Host Software Cluster`, it is possible to freeze the `Software Cluster Connection` for all clusters. After setting the bit, it is no longer possible to flash single clusters. Reprogramming can only be done for the whole ECU.

6.2 Utilization of RTE features

No Blocking APIs of RTE can be used by SWCs in a Software Clusters.

Rationale: Several software clusters share the same Basic Software including the operating system. This requires a 'gentle' behavior of the Software Clusters in order to avoid blocking of the schedule by a single Software Cluster.

No synchronous client server calls between Application Software Clusters.

Rationale: Software Clusters are built independently from each other. It is almost impossible to create a software function, which can be called from a completely unknow context. A solution to this problem would involve a complex and blocking RPC mechanism!

6.3 Constraints on feasible decoupling

Please note that Software Clusters in any case do not use run-time measures to enforce a strict separation between different Software Clusters.

This design decision considers the fact that run-time protection requires certain hardware support (for example MPU regions) and CPU performance, whose availability is limited on real existing microcontrollers. To reach specific safety-goals or other separation goals of an ECU, Software Clusters support the existing separation mechanisms, based on Partitions. However, to avoid unnecessary overhead, it is also possible to share partitions between Application Software Clusters.

Nevertheless, it is up to the concrete project to decide, where which kind of separation is required, desirable and affordable on the selected target microcontroller for the concrete software.

Very likely, reaching the goal of independent homologation / certification requires the usage of virtual machines.

Rationale: Different Application Software Clusters share the same BSW Stack and execution environment. Therefore, it will be hard to formally prove that these Software Clusters are free from unintended side effects!

Virtual machines versus software clusters in classic platform

The decision, whether virtual machines (where each of them contains its own BSW Stack) or software clusters are used to split the overall SW System into independent units, is a trade of between complete independence of the SW units and required resources (RAM, ROM, Runtime, etc.)

The current concept setup focuses on a rather lean approach for software clusters, supporting independent development. Use cases that require hard separation are better suited to virtual machines with independent BSW Stacks.

6.4 Basic Software integration in an Application Software Cluster

Even if the solution in AUTOSAR basically supports the integration of BSW modules, it does not provide a generic solution for any flexible BSW module distribution and separation. The standardized solution focuses on the independent usage of RTE, Transformers and Libraries.

The basic motivation for BSW integration in an Application Software Cluster is either to localize integration decisions, when integrated software components depend on BSW services, or to improve performance by avoidance of cross cluster interface crossing.

An additional motivation is the possible scenario to put an independent set of Diagnosis Modules (Dcm, Dem, Fim) into an Application Software Cluster. In doing so, BSW modules existing in the Host Software Cluster may also exist as an additional instance in one or several Application Software Clusters

But adding BSW modules to multiple Software Clusters leads to a significant increases in the overall BSW resource need.

This concept excludes the use case to move any arbitrary BSW module into a software cluster. It also excludes the objective to enable the independent update of single or smaller sets of BSW modules. The BSW module implementation has to support the integration into an Application Software Cluster, which provides only a limited environment:

- Hardware interrupts are not available (ISR tables reside in Host Software Cluster)
- Direct HW access is not supported and strongly discouraged. This excludes any driver with hardware access!

- In general, interfaces of other BSW modules will not be available and it will not be possible to call other BSW modules. The only exception are interfaces provided by `Proxy Modules` and other local BSW modules inside the same cluster.
- Usage of BSW Modules inside a `Software Cluster` may not easily be distributable to several cores (or only with some performance penalty), since the low-level mechanisms for partition / core passing are only available in the `Host Software Cluster`!

Rationale: BSW Modules in the AUTOSAR Architecture have strong configuration dependencies, which hard to break up into different SW units.

6.5 Functional restrictions

In the current release of AUTOSAR, the usage of features by Software Clusters in general, but especially by Application Software Clusters is restricted to a basic set. This section lists the most prominent not supported functionalities. Nevertheless, it claims not to be complete.

- Postbuild variability for `Software Cluster` interfaces is currently out of scope of this concept and will not be supported.

These restrictions might be removed in future AUTOSAR releases.

6.6 Flashing and Compatibility

One of the goals of this concept is to allow changing and updating single clusters, without having to rebuild and reflash the complete software. This, of course, has some influence on the flashing process. Since flash programming is usually out of scope of the AUTOSAR Classic Platform, these points are not mentioned in the specification document. Nevertheless, some hints are given in this section.

A typical programming session usually consist of the following steps:

- check readiness
- start flash routine
- check compatibility
- upload new data to the ECU
- write new data to flash
- restart ECU

6.6.1 Severe incompatibilities

In non clustered projects, the compatibility check is required to ensure that the new data fits on a certain ECU. Without this check, it would be possible to flash software that does not run on the given ECU.

Such a check is also required for clustered software. A cluster can be totally incompatible to the rest of the software, especially to the Host Software Cluster. For example, if the cluster hex is built for a different memory layout, flashing it might overwrite addresses that are assigned to other clusters, leaving the system in an undefined state. There are many other examples, like using a compiler with a different calling convention.

To handle these severe incompatibilities, the specification document defines the Software Cluster Base Configuration Check. This uses a guard value calculated from two parts. One part, SwCluCAutoBaseConfigDescriptor, is calculated, and should be implemented to cover incompatibilities that can be detected automatically (e.g. changed memory layout). The other part, SwCluCUserBaseConfigDescriptor, is maintained manually. It should be changed, whenever an incompatiblity is introduced that cannot be detected manually (e.g. a new compiler).

In case of a severe incompatiblity, the flash process should be aborted, before the new data is uploaded.

6.6.2 Severe Connection Errors

In case the connection is done on-Board, a new connection phase has to be done after programming. During this phase, incompatibilities can surface. The section 'Errors during software cluster connection' of the specification document lists errors, which cause an abort of the connection phase. In such a case, the newly programmed cluster will not be started. This can lead to knock-on effects on other clusters, and in some cases might lead to a system that can no longer start. In such a case, the system should, if possible, roll back to the previous state, or enter a state that allows diagnosing this problem and flashing a corrected cluster.

A Example listings

A.1 Software Component Description

A.1.1 DOC_SwCluC_SwcAnton_SWCD.arxml

```
<AUTOSAR xmlns="http://autosar.org/schema/r4.0" xmlns:xsi="http://www.w3.
    org/2001/XMLSchema-instance" xsi:schemaLocation="http://autosar.org/
    schema/r4.0 AUTOSAR_00055.xsd">
  <AR-PACKAGES>
    <AR-PACKAGE>
      <SHORT-NAME>AUTOSAR</SHORT-NAME>
      <AR-PACKAGES>
        <AR-PACKAGE>
          <SHORT-NAME>CONC_670</SHORT-NAME>
          <AR-PACKAGES>
            <AR-PACKAGE>
              <SHORT-NAME>SwcAnton</SHORT-NAME>
              <AR-PACKAGES>
                <AR-PACKAGE>
                  <SHORT-NAME>SwComponentTypes</SHORT-NAME>
                  <ELEMENTS>
                    <APPLICATION-SW-COMPONENT-TYPE>
                      <SHORT-NAME>SwcAnton</SHORT-NAME>
                      <PORTS>
                        <P-PORT-PROTOTYPE>
                          <SHORT-NAME>PP_Anton</SHORT-NAME>
                          <PROVIDED-INTERFACE-TREF DEST="SENDER-RECEIVER-
                              INTERFACE">/AUTOSAR/CONC_670/SwcAnton/
                              PortInterfaces/IF_Anton</PROVIDED-INTERFACE-
                              TREF>
                        </P-PORT-PROTOTYPE>
                      </PORTS>
                      <INTERNAL-BEHAVIORS>
                        <SWC-INTERNAL-BEHAVIOR>
                          <SHORT-NAME>IB_SwcAnton</SHORT-NAME>
                          <DATA-TYPE-MAPPING-REFS>
                            <DATA-TYPE-MAPPING-REF DEST="DATA-TYPE-MAPPING-
                                SET">/AUTOSAR/CONC_670/SwcAnton/
                                DataTypeMappingSets/DTMS_SwcAnton</DATA-TYPE
                                -MAPPING-REF>
                          </DATA-TYPE-MAPPING-REFS>
                          <EVENTS>
                            <TIMING-EVENT>
                              <SHORT-NAME>TE_SwcAnton_10ms</SHORT-NAME>
                              <START-ON-EVENT-REF DEST="RUNNABLE-ENTITY">/
                                  AUTOSAR/CONC_670/SwcAnton/SwComponentTypes
                                  /SwcAnton/IB_SwcAnton/RE_SwcAnton_10ms</
                                  START-ON-EVENT-REF>
                              <PERIOD>0.01</PERIOD>
                            </TIMING-EVENT>
                          </EVENTS>
                          <RUNNABLES>
```

```
                <RUNNABLE-ENTITY>
                  <SHORT-NAME>RE_SwcAnton_10ms</SHORT-NAME>
                  <CAN-BE-INVOKED-CONCURRENTLY>false</CAN-BE-
                      INVOKED-CONCURRENTLY>
                  <DATA-SEND-POINTS>
                    <VARIABLE-ACCESS>
                      <SHORT-NAME>DSP_Anton_0</SHORT-NAME>
                      <ACCESSED-VARIABLE>
                        <AUTOSAR-VARIABLE-IREF>
                          <PORT-PROTOTYPE-REF DEST="P-PORT-
                              PROTOTYPE">/AUTOSAR/CONC_670/
                              SwcAnton/SwComponentTypes/SwcAnton
                              /PP_Anton</PORT-PROTOTYPE-REF>
                          <TARGET-DATA-PROTOTYPE-REF DEST="
                              VARIABLE-DATA-PROTOTYPE">/AUTOSAR/
                              CONC_670/SwcAnton/PortInterfaces/
                              IF_Anton/Anton</TARGET-DATA-
                              PROTOTYPE-REF>
                        </AUTOSAR-VARIABLE-IREF>
                      </ACCESSED-VARIABLE>
                    </VARIABLE-ACCESS>
                  </DATA-SEND-POINTS>
                  <SYMBOL>RE_SwcAnton_10ms</SYMBOL>
                </RUNNABLE-ENTITY>
              </RUNNABLES>
              <SUPPORTS-MULTIPLE-INSTANTIATION>false</SUPPORTS-
                  MULTIPLE-INSTANTIATION>
            </SWC-INTERNAL-BEHAVIOR>
          </INTERNAL-BEHAVIORS>
        </APPLICATION-SW-COMPONENT-TYPE>
      </ELEMENTS>
    </AR-PACKAGE>
    <AR-PACKAGE>
      <SHORT-NAME>SwcImplementations</SHORT-NAME>
      <ELEMENTS>
        <SWC-IMPLEMENTATION>
          <SHORT-NAME>IMPL_SwcAnton</SHORT-NAME>
          <CODE-DESCRIPTORS>
            <CODE>
              <SHORT-NAME>Code</SHORT-NAME>
              <ARTIFACT-DESCRIPTORS>
                <AUTOSAR-ENGINEERING-OBJECT>
                  <SHORT-LABEL>AutosarEngineeringObject</SHORT-
                      LABEL>
                  <CATEGORY>SWSRC</CATEGORY>
                </AUTOSAR-ENGINEERING-OBJECT>
              </ARTIFACT-DESCRIPTORS>
            </CODE>
          </CODE-DESCRIPTORS>
          <PROGRAMMING-LANGUAGE>C</PROGRAMMING-LANGUAGE>
          <BEHAVIOR-REF DEST="SWC-INTERNAL-BEHAVIOR">/AUTOSAR/
              CONC_670/SwcAnton/SwComponentTypes/SwcAnton/
              IB_SwcAnton</BEHAVIOR-REF>
        </SWC-IMPLEMENTATION>
      </ELEMENTS>
    </AR-PACKAGE>
```

```
<AR-PACKAGE>
  <SHORT-NAME>ApplicationDataTypes</SHORT-NAME>
  <ELEMENTS>
    <APPLICATION-PRIMITIVE-DATA-TYPE>
      <SHORT-NAME>Type_Anton</SHORT-NAME>
      <CATEGORY>VALUE</CATEGORY>
      <SW-DATA-DEF-PROPS>
        <SW-DATA-DEF-PROPS-VARIANTS>
          <SW-DATA-DEF-PROPS-CONDITIONAL>
            <SW-CALIBRATION-ACCESS>READ-ONLY</SW-
                CALIBRATION-ACCESS>
            <COMPU-METHOD-REF DEST="COMPU-METHOD">/AUTOSAR/
                CONC_670/SwcAnton/CompuMethods/Identical</
                COMPU-METHOD-REF>
            <SW-IMPL-POLICY>STANDARD</SW-IMPL-POLICY>
          </SW-DATA-DEF-PROPS-CONDITIONAL>
        </SW-DATA-DEF-PROPS-VARIANTS>
      </SW-DATA-DEF-PROPS>
    </APPLICATION-PRIMITIVE-DATA-TYPE>
  </ELEMENTS>
</AR-PACKAGE>
<AR-PACKAGE>
  <SHORT-NAME>PortInterfaces</SHORT-NAME>
  <ELEMENTS>
    <SENDER-RECEIVER-INTERFACE>
      <SHORT-NAME>IF_Anton</SHORT-NAME>
      <IS-SERVICE>false</IS-SERVICE>
      <SERVICE-KIND>VENDOR-SPECIFIC</SERVICE-KIND>
      <DATA-ELEMENTS>
        <VARIABLE-DATA-PROTOTYPE>
          <SHORT-NAME>Anton</SHORT-NAME>
          <CATEGORY>VALUE</CATEGORY>
          <SW-DATA-DEF-PROPS>
            <SW-DATA-DEF-PROPS-VARIANTS>
              <SW-DATA-DEF-PROPS-CONDITIONAL>
                <SW-CALIBRATION-ACCESS>READ-ONLY</SW-
                    CALIBRATION-ACCESS>
              </SW-DATA-DEF-PROPS-CONDITIONAL>
            </SW-DATA-DEF-PROPS-VARIANTS>
          </SW-DATA-DEF-PROPS>
          <TYPE-TREF DEST="APPLICATION-PRIMITIVE-DATA-TYPE"
              >/AUTOSAR/CONC_670/SwcAnton/
              ApplicationDataTypes/Type_Anton</TYPE-TREF>
        </VARIABLE-DATA-PROTOTYPE>
      </DATA-ELEMENTS>
    </SENDER-RECEIVER-INTERFACE>
  </ELEMENTS>
</AR-PACKAGE>
<AR-PACKAGE>
  <SHORT-NAME>ImplementationDataTypes</SHORT-NAME>
  <ELEMENTS>
    <IMPLEMENTATION-DATA-TYPE>
      <SHORT-NAME>Type_Anton</SHORT-NAME>
      <CATEGORY>TYPE_REFERENCE</CATEGORY>
      <SW-DATA-DEF-PROPS>
        <SW-DATA-DEF-PROPS-VARIANTS>
```

```
                    <SW-DATA-DEF-PROPS-CONDITIONAL>
                      <IMPLEMENTATION-DATA-TYPE-REF DEST="
                          IMPLEMENTATION-DATA-TYPE">/AUTOSAR_Platform/
                          ImplementationDataTypes/uint16</
                          IMPLEMENTATION-DATA-TYPE-REF>
                    </SW-DATA-DEF-PROPS-CONDITIONAL>
                  </SW-DATA-DEF-PROPS-VARIANTS>
                </SW-DATA-DEF-PROPS>
              </IMPLEMENTATION-DATA-TYPE>
            </ELEMENTS>
          </AR-PACKAGE>
          <AR-PACKAGE>
            <SHORT-NAME>DataTypeMappingSets</SHORT-NAME>
            <ELEMENTS>
              <DATA-TYPE-MAPPING-SET>
                <SHORT-NAME>DTMS_SwcAnton</SHORT-NAME>
                <DATA-TYPE-MAPS>
                  <DATA-TYPE-MAP>
                    <APPLICATION-DATA-TYPE-REF DEST="APPLICATION-
                        PRIMITIVE-DATA-TYPE">/AUTOSAR/CONC_670/
                        SwcAnton/ApplicationDataTypes/Type_Anton</
                        APPLICATION-DATA-TYPE-REF>
                    <IMPLEMENTATION-DATA-TYPE-REF DEST="
                        IMPLEMENTATION-DATA-TYPE">/AUTOSAR/CONC_670/
                        SwcAnton/ImplementationDataTypes/Type_Anton</
                        IMPLEMENTATION-DATA-TYPE-REF>
                  </DATA-TYPE-MAP>
                </DATA-TYPE-MAPS>
              </DATA-TYPE-MAPPING-SET>
            </ELEMENTS>
          </AR-PACKAGE>
          <AR-PACKAGE>
            <SHORT-NAME>Units</SHORT-NAME>
            <ELEMENTS>
              <UNIT>
                <SHORT-NAME>No_Unit</SHORT-NAME>
                <FACTOR-SI-TO-UNIT>1.0</FACTOR-SI-TO-UNIT>
                <OFFSET-SI-TO-UNIT>0.0</OFFSET-SI-TO-UNIT>
              </UNIT>
            </ELEMENTS>
          </AR-PACKAGE>
          <AR-PACKAGE>
            <SHORT-NAME>CompuMethods</SHORT-NAME>
            <ELEMENTS>
              <COMPU-METHOD>
                <SHORT-NAME>Identical</SHORT-NAME>
                <CATEGORY>IDENTICAL</CATEGORY>
                <UNIT-REF DEST="UNIT">/AUTOSAR/CONC_670/SwcAnton/
                    Units/No_Unit</UNIT-REF>
              </COMPU-METHOD>
            </ELEMENTS>
          </AR-PACKAGE>
        </AR-PACKAGES>
      </AR-PACKAGE>
    </AR-PACKAGES>
  </AR-PACKAGE>
```

```
      </AR-PACKAGES>
    </AR-PACKAGE>
  </AR-PACKAGES>
</AUTOSAR>
```

Listing A.1: DOC_SwCluC_SwcAnton_SWCD.arxml

A.1.2 DOC_SwCluC_SwcBernd_SWCD.arxml

```
<AUTOSAR xmlns="http://autosar.org/schema/r4.0" xmlns:xsi="http://www.w3.
    org/2001/XMLSchema-instance" xsi:schemaLocation="http://autosar.org/
    schema/r4.0 AUTOSAR_00055.xsd">
  <AR-PACKAGES>
    <AR-PACKAGE>
      <SHORT-NAME>AUTOSAR</SHORT-NAME>
      <AR-PACKAGES>
        <AR-PACKAGE>
          <SHORT-NAME>CONC_670</SHORT-NAME>
          <AR-PACKAGES>
            <AR-PACKAGE>
              <SHORT-NAME>SwcBernd</SHORT-NAME>
              <AR-PACKAGES>
                <AR-PACKAGE>
                  <SHORT-NAME>SwComponentTypes</SHORT-NAME>
                  <ELEMENTS>
                    <APPLICATION-SW-COMPONENT-TYPE>
                      <SHORT-NAME>SwcBernd</SHORT-NAME>
                      <ADMIN-DATA>
                        <SDGS>
                          <SDG GID="Master">
                            <SD>true</SD>
                          </SDG>
                        </SDGS>
                      </ADMIN-DATA>
                      <PORTS>
                        <P-PORT-PROTOTYPE>
                          <SHORT-NAME>PP_Bernd</SHORT-NAME>
                          <PROVIDED-INTERFACE-TREF DEST="SENDER-RECEIVER-
                              INTERFACE">/AUTOSAR/CONC_670/SwcBernd/
                              PortInterfaces/IF_Bernd</PROVIDED-INTERFACE-
                              TREF>
                        </P-PORT-PROTOTYPE>
                        <R-PORT-PROTOTYPE>
                          <SHORT-NAME>RP_Anton</SHORT-NAME>
                          <REQUIRED-INTERFACE-TREF DEST="SENDER-RECEIVER-
                              INTERFACE">/AUTOSAR/CONC_670/SwcBernd/
                              PortInterfaces/IF_Anton</REQUIRED-INTERFACE-
                              TREF>
                        </R-PORT-PROTOTYPE>
                        <R-PORT-PROTOTYPE>
                          <SHORT-NAME>RP_Celine</SHORT-NAME>
```

```
        <REQUIRED-INTERFACE-TREF DEST="SENDER-RECEIVER-
            INTERFACE">/AUTOSAR/CONC_670/SwcBernd/
            PortInterfaces/IF_Celine</REQUIRED-INTERFACE-
            TREF>
      </R-PORT-PROTOTYPE>
    </PORTS>
    <INTERNAL-BEHAVIORS>
      <SWC-INTERNAL-BEHAVIOR>
        <SHORT-NAME>IB_SwcBernd</SHORT-NAME>
        <DATA-TYPE-MAPPING-REFS>
          <DATA-TYPE-MAPPING-REF DEST="DATA-TYPE-MAPPING-
              SET">/AUTOSAR/CONC_670/SwcBernd/
              DataTypeMappingSets/DTMS_SwcBernd</DATA-TYPE
              -MAPPING-REF>
        </DATA-TYPE-MAPPING-REFS>
        <EVENTS>
          <TIMING-EVENT>
            <SHORT-NAME>TE_SwcBernd_10ms</SHORT-NAME>
            <START-ON-EVENT-REF DEST="RUNNABLE-ENTITY">/
                AUTOSAR/CONC_670/SwcBernd/SwComponentTypes
                /SwcBernd/IB_SwcBernd/RE_SwcBernd_10ms</
                START-ON-EVENT-REF>
            <PERIOD>0.01</PERIOD>
          </TIMING-EVENT>
          <TIMING-EVENT>
            <SHORT-NAME>TE_SwcBernd_50ms</SHORT-NAME>
            <START-ON-EVENT-REF DEST="RUNNABLE-ENTITY">/
                AUTOSAR/CONC_670/SwcBernd/SwComponentTypes
                /SwcBernd/IB_SwcBernd/RE_SwcBernd_50ms</
                START-ON-EVENT-REF>
            <PERIOD>0.05</PERIOD>
          </TIMING-EVENT>
        </EVENTS>
        <RUNNABLES>
          <RUNNABLE-ENTITY>
            <SHORT-NAME>RE_SwcBernd_10ms</SHORT-NAME>
            <CAN-BE-INVOKED-CONCURRENTLY>false</CAN-BE-
                INVOKED-CONCURRENTLY>
            <DATA-SEND-POINTS>
              <VARIABLE-ACCESS>
                <SHORT-NAME>DSP_Bernd_0</SHORT-NAME>
                <ACCESSED-VARIABLE>
                  <AUTOSAR-VARIABLE-IREF>
                    <PORT-PROTOTYPE-REF DEST="P-PORT-
                        PROTOTYPE">/AUTOSAR/CONC_670/
                        SwcBernd/SwComponentTypes/SwcBernd
                        /PP_Bernd</PORT-PROTOTYPE-REF>
                    <TARGET-DATA-PROTOTYPE-REF DEST="
                        VARIABLE-DATA-PROTOTYPE">/AUTOSAR/
                        CONC_670/SwcBernd/PortInterfaces/
                        IF_Bernd/Bernd</TARGET-DATA-
                        PROTOTYPE-REF>
                  </AUTOSAR-VARIABLE-IREF>
                </ACCESSED-VARIABLE>
              </VARIABLE-ACCESS>
            </DATA-SEND-POINTS>
```

```
            <SYMBOL>RE_SwcBernd_10ms</SYMBOL>
          </RUNNABLE-ENTITY>
          <RUNNABLE-ENTITY>
            <SHORT-NAME>RE_SwcBernd_50ms</SHORT-NAME>
            <DATA-RECEIVE-POINT-BY-ARGUMENTS>
              <VARIABLE-ACCESS>
                <SHORT-NAME>DRPA_Anton_0</SHORT-NAME>
                <ACCESSED-VARIABLE>
                  <AUTOSAR-VARIABLE-IREF>
                    <PORT-PROTOTYPE-REF DEST="R-PORT-
                        PROTOTYPE">/AUTOSAR/CONC_670/
                        SwcBernd/SwComponentTypes/SwcBernd
                        /RP_Anton</PORT-PROTOTYPE-REF>
                    <TARGET-DATA-PROTOTYPE-REF DEST="
                        VARIABLE-DATA-PROTOTYPE">/AUTOSAR/
                        CONC_670/SwcBernd/PortInterfaces/
                        IF_Anton/Anton</TARGET-DATA-
                        PROTOTYPE-REF>
                  </AUTOSAR-VARIABLE-IREF>
                </ACCESSED-VARIABLE>
              </VARIABLE-ACCESS>
            </DATA-RECEIVE-POINT-BY-ARGUMENTS>
            <DATA-RECEIVE-POINT-BY-VALUES>
              <VARIABLE-ACCESS>
                <SHORT-NAME>DRPV_Celine_0</SHORT-NAME>
                <ACCESSED-VARIABLE>
                  <AUTOSAR-VARIABLE-IREF>
                    <PORT-PROTOTYPE-REF DEST="R-PORT-
                        PROTOTYPE">/AUTOSAR/CONC_670/
                        SwcBernd/SwComponentTypes/SwcBernd
                        /RP_Celine</PORT-PROTOTYPE-REF>
                    <TARGET-DATA-PROTOTYPE-REF DEST="
                        VARIABLE-DATA-PROTOTYPE">/AUTOSAR/
                        CONC_670/SwcBernd/PortInterfaces/
                        IF_Celine/Celine</TARGET-DATA-
                        PROTOTYPE-REF>
                  </AUTOSAR-VARIABLE-IREF>
                </ACCESSED-VARIABLE>
              </VARIABLE-ACCESS>
            </DATA-RECEIVE-POINT-BY-VALUES>
            <SYMBOL>RE_SwcBernd_50ms</SYMBOL>
          </RUNNABLE-ENTITY>
        </RUNNABLES>
        <SUPPORTS-MULTIPLE-INSTANTIATION>false</SUPPORTS-
            MULTIPLE-INSTANTIATION>
      </SWC-INTERNAL-BEHAVIOR>
    </INTERNAL-BEHAVIORS>
  </APPLICATION-SW-COMPONENT-TYPE>
</ELEMENTS>
</AR-PACKAGE>
<AR-PACKAGE>
  <SHORT-NAME>SwcImplementations</SHORT-NAME>
  <ELEMENTS>
    <SWC-IMPLEMENTATION>
      <SHORT-NAME>IMPL_SwcBernd</SHORT-NAME>
      <CODE-DESCRIPTORS>
```

```
            <CODE>
              <SHORT-NAME>Code</SHORT-NAME>
              <ARTIFACT-DESCRIPTORS>
                <AUTOSAR-ENGINEERING-OBJECT>
                  <SHORT-LABEL>AutosarEngineeringObject</SHORT-
                      LABEL>
                  <CATEGORY>SWSRC</CATEGORY>
                </AUTOSAR-ENGINEERING-OBJECT>
              </ARTIFACT-DESCRIPTORS>
            </CODE>
          </CODE-DESCRIPTORS>
          <PROGRAMMING-LANGUAGE>C</PROGRAMMING-LANGUAGE>
          <BEHAVIOR-REF DEST="SWC-INTERNAL-BEHAVIOR">/AUTOSAR/
              CONC_670/SwcBernd/SwComponentTypes/SwcBernd/
              IB_SwcBernd</BEHAVIOR-REF>
        </SWC-IMPLEMENTATION>
      </ELEMENTS>
    </AR-PACKAGE>
    <AR-PACKAGE>
      <SHORT-NAME>ApplicationDataTypes</SHORT-NAME>
      <ELEMENTS>
        <APPLICATION-PRIMITIVE-DATA-TYPE>
          <SHORT-NAME>Type_Anton</SHORT-NAME>
          <CATEGORY>VALUE</CATEGORY>
          <SW-DATA-DEF-PROPS>
            <SW-DATA-DEF-PROPS-VARIANTS>
              <SW-DATA-DEF-PROPS-CONDITIONAL>
                <SW-CALIBRATION-ACCESS>READ-ONLY</SW-
                    CALIBRATION-ACCESS>
                <COMPU-METHOD-REF DEST="COMPU-METHOD">/AUTOSAR/
                    CONC_670/SwcBernd/CompuMethods/Identical</
                    COMPU-METHOD-REF>
                <SW-IMPL-POLICY>STANDARD</SW-IMPL-POLICY>
              </SW-DATA-DEF-PROPS-CONDITIONAL>
            </SW-DATA-DEF-PROPS-VARIANTS>
          </SW-DATA-DEF-PROPS>
        </APPLICATION-PRIMITIVE-DATA-TYPE>
        <APPLICATION-PRIMITIVE-DATA-TYPE>
          <SHORT-NAME>Type_Hugo</SHORT-NAME>
          <CATEGORY>VALUE</CATEGORY>
          <SW-DATA-DEF-PROPS>
            <SW-DATA-DEF-PROPS-VARIANTS>
              <SW-DATA-DEF-PROPS-CONDITIONAL>
                <SW-CALIBRATION-ACCESS>READ-ONLY</SW-
                    CALIBRATION-ACCESS>
                <COMPU-METHOD-REF DEST="COMPU-METHOD">/AUTOSAR/
                    CONC_670/SwcBernd/CompuMethods/Identical</
                    COMPU-METHOD-REF>
                <SW-IMPL-POLICY>STANDARD</SW-IMPL-POLICY>
              </SW-DATA-DEF-PROPS-CONDITIONAL>
            </SW-DATA-DEF-PROPS-VARIANTS>
          </SW-DATA-DEF-PROPS>
        </APPLICATION-PRIMITIVE-DATA-TYPE>
        <APPLICATION-PRIMITIVE-DATA-TYPE>
          <SHORT-NAME>Type_Bernd</SHORT-NAME>
          <CATEGORY>VALUE</CATEGORY>
```

```
        <SW-DATA-DEF-PROPS>
          <SW-DATA-DEF-PROPS-VARIANTS>
            <SW-DATA-DEF-PROPS-CONDITIONAL>
              <SW-CALIBRATION-ACCESS>READ-ONLY</SW-
                  CALIBRATION-ACCESS>
              <COMPU-METHOD-REF DEST="COMPU-METHOD">/AUTOSAR/
                  CONC_670/SwcBernd/CompuMethods/Identical</
                  COMPU-METHOD-REF>
              <SW-IMPL-POLICY>STANDARD</SW-IMPL-POLICY>
            </SW-DATA-DEF-PROPS-CONDITIONAL>
          </SW-DATA-DEF-PROPS-VARIANTS>
        </SW-DATA-DEF-PROPS>
      </APPLICATION-PRIMITIVE-DATA-TYPE>
      <APPLICATION-PRIMITIVE-DATA-TYPE>
        <SHORT-NAME>Type_Celine</SHORT-NAME>
        <CATEGORY>VALUE</CATEGORY>
        <SW-DATA-DEF-PROPS>
          <SW-DATA-DEF-PROPS-VARIANTS>
            <SW-DATA-DEF-PROPS-CONDITIONAL>
              <SW-CALIBRATION-ACCESS>READ-ONLY</SW-
                  CALIBRATION-ACCESS>
              <COMPU-METHOD-REF DEST="COMPU-METHOD">/AUTOSAR/
                  CONC_670/SwcBernd/CompuMethods/Identical</
                  COMPU-METHOD-REF>
              <SW-IMPL-POLICY>STANDARD</SW-IMPL-POLICY>
            </SW-DATA-DEF-PROPS-CONDITIONAL>
          </SW-DATA-DEF-PROPS-VARIANTS>
        </SW-DATA-DEF-PROPS>
      </APPLICATION-PRIMITIVE-DATA-TYPE>
    </ELEMENTS>
  </AR-PACKAGE>
  <AR-PACKAGE>
    <SHORT-NAME>CompuMethods</SHORT-NAME>
    <ELEMENTS>
      <COMPU-METHOD>
        <SHORT-NAME>Identical</SHORT-NAME>
        <CATEGORY>IDENTICAL</CATEGORY>
        <UNIT-REF DEST="UNIT">/AUTOSAR/CONC_670/SwcBernd/
            Units/No_Unit</UNIT-REF>
      </COMPU-METHOD>
    </ELEMENTS>
  </AR-PACKAGE>
  <AR-PACKAGE>
    <SHORT-NAME>Units</SHORT-NAME>
    <ELEMENTS>
      <UNIT>
        <SHORT-NAME>No_Unit</SHORT-NAME>
        <FACTOR-SI-TO-UNIT>1.0</FACTOR-SI-TO-UNIT>
        <OFFSET-SI-TO-UNIT>0.0</OFFSET-SI-TO-UNIT>
      </UNIT>
    </ELEMENTS>
  </AR-PACKAGE>
  <AR-PACKAGE>
    <SHORT-NAME>DataTypeMappingSets</SHORT-NAME>
    <ELEMENTS>
      <DATA-TYPE-MAPPING-SET>
```

```
        <SHORT-NAME>DTMS_SwcBernd</SHORT-NAME>
        <DATA-TYPE-MAPS>
          <DATA-TYPE-MAP>
            <APPLICATION-DATA-TYPE-REF DEST="APPLICATION-
                PRIMITIVE-DATA-TYPE">/AUTOSAR/CONC_670/
                SwcBernd/ApplicationDataTypes/Type_Anton</
                APPLICATION-DATA-TYPE-REF>
            <IMPLEMENTATION-DATA-TYPE-REF DEST="
                IMPLEMENTATION-DATA-TYPE">/AUTOSAR/CONC_670/
                SwcBernd/ImplementationDataTypes/Type_Anton</
                IMPLEMENTATION-DATA-TYPE-REF>
          </DATA-TYPE-MAP>
          <DATA-TYPE-MAP>
            <APPLICATION-DATA-TYPE-REF DEST="APPLICATION-
                PRIMITIVE-DATA-TYPE">/AUTOSAR/CONC_670/
                SwcBernd/ApplicationDataTypes/Type_Hugo</
                APPLICATION-DATA-TYPE-REF>
            <IMPLEMENTATION-DATA-TYPE-REF DEST="
                IMPLEMENTATION-DATA-TYPE">/AUTOSAR/CONC_670/
                SwcBernd/ImplementationDataTypes/Type_Hugo</
                IMPLEMENTATION-DATA-TYPE-REF>
          </DATA-TYPE-MAP>
          <DATA-TYPE-MAP>
            <APPLICATION-DATA-TYPE-REF DEST="APPLICATION-
                PRIMITIVE-DATA-TYPE">/AUTOSAR/CONC_670/
                SwcBernd/ApplicationDataTypes/Type_Bernd</
                APPLICATION-DATA-TYPE-REF>
            <IMPLEMENTATION-DATA-TYPE-REF DEST="
                IMPLEMENTATION-DATA-TYPE">/AUTOSAR/CONC_670/
                SwcBernd/ImplementationDataTypes/Type_Bernd</
                IMPLEMENTATION-DATA-TYPE-REF>
          </DATA-TYPE-MAP>
          <DATA-TYPE-MAP>
            <APPLICATION-DATA-TYPE-REF DEST="APPLICATION-
                PRIMITIVE-DATA-TYPE">/AUTOSAR/CONC_670/
                SwcBernd/ApplicationDataTypes/Type_Celine</
                APPLICATION-DATA-TYPE-REF>
            <IMPLEMENTATION-DATA-TYPE-REF DEST="
                IMPLEMENTATION-DATA-TYPE">/AUTOSAR/CONC_670/
                SwcBernd/ImplementationDataTypes/Type_Celine</
                IMPLEMENTATION-DATA-TYPE-REF>
          </DATA-TYPE-MAP>
        </DATA-TYPE-MAPS>
      </DATA-TYPE-MAPPING-SET>
    </ELEMENTS>
  </AR-PACKAGE>
  <AR-PACKAGE>
    <SHORT-NAME>ImplementationDataTypes</SHORT-NAME>
    <ELEMENTS>
      <IMPLEMENTATION-DATA-TYPE>
        <SHORT-NAME>Type_Anton</SHORT-NAME>
        <CATEGORY>TYPE_REFERENCE</CATEGORY>
        <SW-DATA-DEF-PROPS>
          <SW-DATA-DEF-PROPS-VARIANTS>
            <SW-DATA-DEF-PROPS-CONDITIONAL>
```

```
            <IMPLEMENTATION-DATA-TYPE-REF DEST="
                IMPLEMENTATION-DATA-TYPE">/AUTOSAR_Platform/
                ImplementationDataTypes/uint16</
                IMPLEMENTATION-DATA-TYPE-REF>
          </SW-DATA-DEF-PROPS-CONDITIONAL>
        </SW-DATA-DEF-PROPS-VARIANTS>
      </SW-DATA-DEF-PROPS>
    </IMPLEMENTATION-DATA-TYPE>
    <IMPLEMENTATION-DATA-TYPE>
      <SHORT-NAME>Type_Hugo</SHORT-NAME>
      <CATEGORY>TYPE_REFERENCE</CATEGORY>
      <SW-DATA-DEF-PROPS>
        <SW-DATA-DEF-PROPS-VARIANTS>
          <SW-DATA-DEF-PROPS-CONDITIONAL>
            <IMPLEMENTATION-DATA-TYPE-REF DEST="
                IMPLEMENTATION-DATA-TYPE">/AUTOSAR_Platform/
                ImplementationDataTypes/uint32</
                IMPLEMENTATION-DATA-TYPE-REF>
          </SW-DATA-DEF-PROPS-CONDITIONAL>
        </SW-DATA-DEF-PROPS-VARIANTS>
      </SW-DATA-DEF-PROPS>
    </IMPLEMENTATION-DATA-TYPE>
    <IMPLEMENTATION-DATA-TYPE>
      <SHORT-NAME>Type_Bernd</SHORT-NAME>
      <CATEGORY>TYPE_REFERENCE</CATEGORY>
      <SW-DATA-DEF-PROPS>
        <SW-DATA-DEF-PROPS-VARIANTS>
          <SW-DATA-DEF-PROPS-CONDITIONAL>
            <IMPLEMENTATION-DATA-TYPE-REF DEST="
                IMPLEMENTATION-DATA-TYPE">/AUTOSAR_Platform/
                ImplementationDataTypes/uint8</
                IMPLEMENTATION-DATA-TYPE-REF>
          </SW-DATA-DEF-PROPS-CONDITIONAL>
        </SW-DATA-DEF-PROPS-VARIANTS>
      </SW-DATA-DEF-PROPS>
    </IMPLEMENTATION-DATA-TYPE>
    <IMPLEMENTATION-DATA-TYPE>
      <SHORT-NAME>Type_Celine</SHORT-NAME>
      <CATEGORY>TYPE_REFERENCE</CATEGORY>
      <SW-DATA-DEF-PROPS>
        <SW-DATA-DEF-PROPS-VARIANTS>
          <SW-DATA-DEF-PROPS-CONDITIONAL>
            <IMPLEMENTATION-DATA-TYPE-REF DEST="
                IMPLEMENTATION-DATA-TYPE">/AUTOSAR_Platform/
                ImplementationDataTypes/sint16</
                IMPLEMENTATION-DATA-TYPE-REF>
          </SW-DATA-DEF-PROPS-CONDITIONAL>
        </SW-DATA-DEF-PROPS-VARIANTS>
      </SW-DATA-DEF-PROPS>
    </IMPLEMENTATION-DATA-TYPE>
  </ELEMENTS>
</AR-PACKAGE>
<AR-PACKAGE>
  <SHORT-NAME>PortInterfaces</SHORT-NAME>
  <ELEMENTS>
    <SENDER-RECEIVER-INTERFACE>
```

```
      <SHORT-NAME>IF_Anton</SHORT-NAME>
      <IS-SERVICE>false</IS-SERVICE>
      <SERVICE-KIND>VENDOR-SPECIFIC</SERVICE-KIND>
      <DATA-ELEMENTS>
        <VARIABLE-DATA-PROTOTYPE>
          <SHORT-NAME>Anton</SHORT-NAME>
          <CATEGORY>VALUE</CATEGORY>
          <SW-DATA-DEF-PROPS>
            <SW-DATA-DEF-PROPS-VARIANTS>
              <SW-DATA-DEF-PROPS-CONDITIONAL>
                <SW-CALIBRATION-ACCESS>READ-ONLY</SW-
                    CALIBRATION-ACCESS>
              </SW-DATA-DEF-PROPS-CONDITIONAL>
            </SW-DATA-DEF-PROPS-VARIANTS>
          </SW-DATA-DEF-PROPS>
          <TYPE-TREF DEST="APPLICATION-PRIMITIVE-DATA-TYPE"
              >/AUTOSAR/CONC_670/SwcBernd/
              ApplicationDataTypes/Type_Anton</TYPE-TREF>
        </VARIABLE-DATA-PROTOTYPE>
      </DATA-ELEMENTS>
    </SENDER-RECEIVER-INTERFACE>
    <SENDER-RECEIVER-INTERFACE>
      <SHORT-NAME>IF_Hugo</SHORT-NAME>
      <IS-SERVICE>false</IS-SERVICE>
      <SERVICE-KIND>VENDOR-SPECIFIC</SERVICE-KIND>
      <DATA-ELEMENTS>
        <VARIABLE-DATA-PROTOTYPE>
          <SHORT-NAME>Anton</SHORT-NAME>
          <CATEGORY>VALUE</CATEGORY>
          <SW-DATA-DEF-PROPS>
            <SW-DATA-DEF-PROPS-VARIANTS>
              <SW-DATA-DEF-PROPS-CONDITIONAL>
                <SW-CALIBRATION-ACCESS>READ-ONLY</SW-
                    CALIBRATION-ACCESS>
              </SW-DATA-DEF-PROPS-CONDITIONAL>
            </SW-DATA-DEF-PROPS-VARIANTS>
          </SW-DATA-DEF-PROPS>
          <TYPE-TREF DEST="APPLICATION-PRIMITIVE-DATA-TYPE"
              >/AUTOSAR/CONC_670/SwcBernd/
              ApplicationDataTypes/Type_Hugo</TYPE-TREF>
        </VARIABLE-DATA-PROTOTYPE>
      </DATA-ELEMENTS>
    </SENDER-RECEIVER-INTERFACE>
    <SENDER-RECEIVER-INTERFACE>
      <SHORT-NAME>IF_Bernd</SHORT-NAME>
      <IS-SERVICE>false</IS-SERVICE>
      <SERVICE-KIND>VENDOR-SPECIFIC</SERVICE-KIND>
      <DATA-ELEMENTS>
        <VARIABLE-DATA-PROTOTYPE>
          <SHORT-NAME>Bernd</SHORT-NAME>
          <CATEGORY>VALUE</CATEGORY>
          <SW-DATA-DEF-PROPS>
            <SW-DATA-DEF-PROPS-VARIANTS>
              <SW-DATA-DEF-PROPS-CONDITIONAL>
                <SW-CALIBRATION-ACCESS>READ-ONLY</SW-
                    CALIBRATION-ACCESS>
```

```
                    </SW-DATA-DEF-PROPS-CONDITIONAL>
                  </SW-DATA-DEF-PROPS-VARIANTS>
                </SW-DATA-DEF-PROPS>
                <TYPE-TREF DEST="APPLICATION-PRIMITIVE-DATA-TYPE"
                    >/AUTOSAR/CONC_670/SwcBernd/
                    ApplicationDataTypes/Type_Bernd</TYPE-TREF>
              </VARIABLE-DATA-PROTOTYPE>
            </DATA-ELEMENTS>
          </SENDER-RECEIVER-INTERFACE>
          <SENDER-RECEIVER-INTERFACE>
            <SHORT-NAME>IF_Celine</SHORT-NAME>
            <IS-SERVICE>false</IS-SERVICE>
            <SERVICE-KIND>VENDOR-SPECIFIC</SERVICE-KIND>
            <DATA-ELEMENTS>
              <VARIABLE-DATA-PROTOTYPE>
                <SHORT-NAME>Celine</SHORT-NAME>
                <CATEGORY>VALUE</CATEGORY>
                <SW-DATA-DEF-PROPS>
                  <SW-DATA-DEF-PROPS-VARIANTS>
                    <SW-DATA-DEF-PROPS-CONDITIONAL>
                      <SW-CALIBRATION-ACCESS>READ-ONLY</SW-
                          CALIBRATION-ACCESS>
                    </SW-DATA-DEF-PROPS-CONDITIONAL>
                  </SW-DATA-DEF-PROPS-VARIANTS>
                </SW-DATA-DEF-PROPS>
                <TYPE-TREF DEST="APPLICATION-PRIMITIVE-DATA-TYPE"
                    >/AUTOSAR/CONC_670/SwcBernd/
                    ApplicationDataTypes/Type_Celine</TYPE-TREF>
              </VARIABLE-DATA-PROTOTYPE>
            </DATA-ELEMENTS>
          </SENDER-RECEIVER-INTERFACE>
        </ELEMENTS>
      </AR-PACKAGE>
    </AR-PACKAGES>
  </AR-PACKAGE>
 </AR-PACKAGES>
</AR-PACKAGE>
</AR-PACKAGES>
</AUTOSAR>
```

Listing A.2: DOC_SwCluC_SwcBernd_SWCD.arxml

A.1.3 DOC_SwCluC_SwcHugo_SWCD.arxml

```
<AUTOSAR xmlns="http://autosar.org/schema/r4.0" xmlns:xsi="http://www.w3.
    org/2001/XMLSchema-instance" xsi:schemaLocation="http://autosar.org/
    schema/r4.0 AUTOSAR_00055.xsd">
  <AR-PACKAGES>
    <AR-PACKAGE>
      <SHORT-NAME>AUTOSAR</SHORT-NAME>
```

```
<AR-PACKAGES>
  <AR-PACKAGE>
    <SHORT-NAME>CONC_670</SHORT-NAME>
    <AR-PACKAGES>
      <AR-PACKAGE>
        <SHORT-NAME>SwcHugo</SHORT-NAME>
        <AR-PACKAGES>
          <AR-PACKAGE>
            <SHORT-NAME>SwComponentTypes</SHORT-NAME>
            <ELEMENTS>
              <APPLICATION-SW-COMPONENT-TYPE>
                <SHORT-NAME>SwcHugo</SHORT-NAME>
                <PORTS>
                  <P-PORT-PROTOTYPE>
                    <SHORT-NAME>PP_Hugo</SHORT-NAME>
                    <PROVIDED-INTERFACE-TREF DEST="SENDER-RECEIVER-
                        INTERFACE">/AUTOSAR/CONC_670/SwcHugo/
                        PortInterfaces/IF_Hugo</PROVIDED-INTERFACE-
                        TREF>
                  </P-PORT-PROTOTYPE>
                  <R-PORT-PROTOTYPE>
                    <SHORT-NAME>RP_Anton</SHORT-NAME>
                    <REQUIRED-INTERFACE-TREF DEST="SENDER-RECEIVER-
                        INTERFACE">/AUTOSAR/CONC_670/SwcHugo/
                        PortInterfaces/IF_Anton</REQUIRED-INTERFACE-
                        TREF>
                  </R-PORT-PROTOTYPE>
                </PORTS>
                <INTERNAL-BEHAVIORS>
                  <SWC-INTERNAL-BEHAVIOR>
                    <SHORT-NAME>IB_SwcHugo</SHORT-NAME>
                    <DATA-TYPE-MAPPING-REFS>
                      <DATA-TYPE-MAPPING-REF DEST="DATA-TYPE-MAPPING-
                          SET">/AUTOSAR/CONC_670/SwcHugo/
                          DataTypeMappingSets/DTMS_SwcHugo</DATA-TYPE-
                          MAPPING-REF>
                    </DATA-TYPE-MAPPING-REFS>
                    <EVENTS>
                      <TIMING-EVENT>
                        <SHORT-NAME>TE_SwcHugo_10ms</SHORT-NAME>
                        <START-ON-EVENT-REF DEST="RUNNABLE-ENTITY">/
                            AUTOSAR/CONC_670/SwcHugo/SwComponentTypes/
                            SwcHugo/IB_SwcHugo/RE_SwcHugo_10ms</START-
                            ON-EVENT-REF>
                        <PERIOD>0.01</PERIOD>
                      </TIMING-EVENT>
                    </EVENTS>
                    <RUNNABLES>
                      <RUNNABLE-ENTITY>
                        <SHORT-NAME>RE_SwcHugo_10ms</SHORT-NAME>
                        <CAN-BE-INVOKED-CONCURRENTLY>false</CAN-BE-
                            INVOKED-CONCURRENTLY>
                        <DATA-RECEIVE-POINT-BY-VALUES>
                          <VARIABLE-ACCESS>
                            <SHORT-NAME>DRPV_Anton_0</SHORT-NAME>
                            <ACCESSED-VARIABLE>
```

```
                    <AUTOSAR-VARIABLE-IREF>
                      <PORT-PROTOTYPE-REF DEST="R-PORT-
                          PROTOTYPE">/AUTOSAR/CONC_670/
                          SwcHugo/SwComponentTypes/SwcHugo/
                          RP_Anton</PORT-PROTOTYPE-REF>
                      <TARGET-DATA-PROTOTYPE-REF DEST="
                          VARIABLE-DATA-PROTOTYPE">/AUTOSAR/
                          CONC_670/SwcHugo/PortInterfaces/
                          IF_Anton/Anton</TARGET-DATA-
                          PROTOTYPE-REF>
                    </AUTOSAR-VARIABLE-IREF>
                  </ACCESSED-VARIABLE>
                </VARIABLE-ACCESS>
              </DATA-RECEIVE-POINT-BY-VALUES>
              <DATA-SEND-POINTS>
                <VARIABLE-ACCESS>
                  <SHORT-NAME>DSP_Hugo_0</SHORT-NAME>
                  <ACCESSED-VARIABLE>
                    <AUTOSAR-VARIABLE-IREF>
                      <PORT-PROTOTYPE-REF DEST="P-PORT-
                          PROTOTYPE">/AUTOSAR/CONC_670/
                          SwcHugo/SwComponentTypes/SwcHugo/
                          PP_Hugo</PORT-PROTOTYPE-REF>
                      <TARGET-DATA-PROTOTYPE-REF DEST="
                          VARIABLE-DATA-PROTOTYPE">/AUTOSAR/
                          CONC_670/SwcHugo/PortInterfaces/
                          IF_Hugo/Hugo</TARGET-DATA-
                          PROTOTYPE-REF>
                    </AUTOSAR-VARIABLE-IREF>
                  </ACCESSED-VARIABLE>
                </VARIABLE-ACCESS>
              </DATA-SEND-POINTS>
              <SYMBOL>RE_SwcHugo_10ms</SYMBOL>
            </RUNNABLE-ENTITY>
          </RUNNABLES>
          <SUPPORTS-MULTIPLE-INSTANTIATION>false</SUPPORTS-
              MULTIPLE-INSTANTIATION>
        </SWC-INTERNAL-BEHAVIOR>
      </INTERNAL-BEHAVIORS>
    </APPLICATION-SW-COMPONENT-TYPE>
  </ELEMENTS>
</AR-PACKAGE>
<AR-PACKAGE>
  <SHORT-NAME>SwcImplementations</SHORT-NAME>
  <ELEMENTS>
    <SWC-IMPLEMENTATION>
      <SHORT-NAME>IMPL_SwcHugo</SHORT-NAME>
      <CODE-DESCRIPTORS>
        <CODE>
          <SHORT-NAME>Code</SHORT-NAME>
          <ARTIFACT-DESCRIPTORS>
            <AUTOSAR-ENGINEERING-OBJECT>
              <SHORT-LABEL>AutosarEngineeringObject</SHORT-
                  LABEL>
              <CATEGORY>SWSRC</CATEGORY>
            </AUTOSAR-ENGINEERING-OBJECT>
```

```
            </ARTIFACT-DESCRIPTORS>
          </CODE>
        </CODE-DESCRIPTORS>
        <PROGRAMMING-LANGUAGE>C</PROGRAMMING-LANGUAGE>
        <BEHAVIOR-REF DEST="SWC-INTERNAL-BEHAVIOR">/AUTOSAR/
            CONC_670/SwcHugo/SwComponentTypes/SwcHugo/
            IB_SwcHugo</BEHAVIOR-REF>
      </SWC-IMPLEMENTATION>
    </ELEMENTS>
  </AR-PACKAGE>
  <AR-PACKAGE>
    <SHORT-NAME>ApplicationDataTypes</SHORT-NAME>
    <ELEMENTS>
      <APPLICATION-PRIMITIVE-DATA-TYPE>
        <SHORT-NAME>Type_Anton</SHORT-NAME>
        <CATEGORY>VALUE</CATEGORY>
        <SW-DATA-DEF-PROPS>
          <SW-DATA-DEF-PROPS-VARIANTS>
            <SW-DATA-DEF-PROPS-CONDITIONAL>
              <SW-CALIBRATION-ACCESS>READ-ONLY</SW-
                  CALIBRATION-ACCESS>
              <COMPU-METHOD-REF DEST="COMPU-METHOD">/AUTOSAR/
                  CONC_670/SwcHugo/CompuMethods/Identical</
                  COMPU-METHOD-REF>
              <SW-IMPL-POLICY>STANDARD</SW-IMPL-POLICY>
            </SW-DATA-DEF-PROPS-CONDITIONAL>
          </SW-DATA-DEF-PROPS-VARIANTS>
        </SW-DATA-DEF-PROPS>
      </APPLICATION-PRIMITIVE-DATA-TYPE>
      <APPLICATION-PRIMITIVE-DATA-TYPE>
        <SHORT-NAME>Type_Hugo</SHORT-NAME>
        <CATEGORY>VALUE</CATEGORY>
        <SW-DATA-DEF-PROPS>
          <SW-DATA-DEF-PROPS-VARIANTS>
            <SW-DATA-DEF-PROPS-CONDITIONAL>
              <SW-CALIBRATION-ACCESS>READ-ONLY</SW-
                  CALIBRATION-ACCESS>
              <COMPU-METHOD-REF DEST="COMPU-METHOD">/AUTOSAR/
                  CONC_670/SwcHugo/CompuMethods/Identical</
                  COMPU-METHOD-REF>
              <SW-IMPL-POLICY>STANDARD</SW-IMPL-POLICY>
            </SW-DATA-DEF-PROPS-CONDITIONAL>
          </SW-DATA-DEF-PROPS-VARIANTS>
        </SW-DATA-DEF-PROPS>
      </APPLICATION-PRIMITIVE-DATA-TYPE>
    </ELEMENTS>
  </AR-PACKAGE>
  <AR-PACKAGE>
    <SHORT-NAME>CompuMethods</SHORT-NAME>
    <ELEMENTS>
      <COMPU-METHOD>
        <SHORT-NAME>Identical</SHORT-NAME>
        <CATEGORY>IDENTICAL</CATEGORY>
        <UNIT-REF DEST="UNIT">/AUTOSAR/CONC_670/SwcHugo/Units
            /No_Unit</UNIT-REF>
      </COMPU-METHOD>
```

```
      </ELEMENTS>
    </AR-PACKAGE>
    <AR-PACKAGE>
      <SHORT-NAME>Units</SHORT-NAME>
      <ELEMENTS>
        <UNIT>
          <SHORT-NAME>No_Unit</SHORT-NAME>
          <FACTOR-SI-TO-UNIT>1.0</FACTOR-SI-TO-UNIT>
          <OFFSET-SI-TO-UNIT>0.0</OFFSET-SI-TO-UNIT>
        </UNIT>
      </ELEMENTS>
    </AR-PACKAGE>
    <AR-PACKAGE>
      <SHORT-NAME>DataTypeMappingSets</SHORT-NAME>
      <ELEMENTS>
        <DATA-TYPE-MAPPING-SET>
          <SHORT-NAME>DTMS_SwcHugo</SHORT-NAME>
          <DATA-TYPE-MAPS>
            <DATA-TYPE-MAP>
              <APPLICATION-DATA-TYPE-REF DEST="APPLICATION-
                  PRIMITIVE-DATA-TYPE">/AUTOSAR/CONC_670/SwcHugo
                  /ApplicationDataTypes/Type_Anton</APPLICATION-
                  DATA-TYPE-REF>
              <IMPLEMENTATION-DATA-TYPE-REF DEST="
                  IMPLEMENTATION-DATA-TYPE">/AUTOSAR/CONC_670/
                  SwcHugo/ImplementationDataTypes/Type_Anton</
                  IMPLEMENTATION-DATA-TYPE-REF>
            </DATA-TYPE-MAP>
            <DATA-TYPE-MAP>
              <APPLICATION-DATA-TYPE-REF DEST="APPLICATION-
                  PRIMITIVE-DATA-TYPE">/AUTOSAR/CONC_670/SwcHugo
                  /ApplicationDataTypes/Type_Hugo</APPLICATION-
                  DATA-TYPE-REF>
              <IMPLEMENTATION-DATA-TYPE-REF DEST="
                  IMPLEMENTATION-DATA-TYPE">/AUTOSAR/CONC_670/
                  SwcHugo/ImplementationDataTypes/Type_Hugo</
                  IMPLEMENTATION-DATA-TYPE-REF>
            </DATA-TYPE-MAP>
          </DATA-TYPE-MAPS>
        </DATA-TYPE-MAPPING-SET>
      </ELEMENTS>
    </AR-PACKAGE>
    <AR-PACKAGE>
      <SHORT-NAME>ImplementationDataTypes</SHORT-NAME>
      <ELEMENTS>
        <IMPLEMENTATION-DATA-TYPE>
          <SHORT-NAME>Type_Anton</SHORT-NAME>
          <CATEGORY>TYPE_REFERENCE</CATEGORY>
          <SW-DATA-DEF-PROPS>
            <SW-DATA-DEF-PROPS-VARIANTS>
              <SW-DATA-DEF-PROPS-CONDITIONAL>
                <IMPLEMENTATION-DATA-TYPE-REF DEST="
                    IMPLEMENTATION-DATA-TYPE">/AUTOSAR_Platform/
                    ImplementationDataTypes/uint16</
                    IMPLEMENTATION-DATA-TYPE-REF>
              </SW-DATA-DEF-PROPS-CONDITIONAL>
```

```
            </SW-DATA-DEF-PROPS-VARIANTS>
          </SW-DATA-DEF-PROPS>
        </IMPLEMENTATION-DATA-TYPE>
        <IMPLEMENTATION-DATA-TYPE>
          <SHORT-NAME>Type_Hugo</SHORT-NAME>
          <CATEGORY>TYPE_REFERENCE</CATEGORY>
          <SW-DATA-DEF-PROPS>
            <SW-DATA-DEF-PROPS-VARIANTS>
              <SW-DATA-DEF-PROPS-CONDITIONAL>
                <IMPLEMENTATION-DATA-TYPE-REF DEST="
                    IMPLEMENTATION-DATA-TYPE">/AUTOSAR_Platform/
                    ImplementationDataTypes/uint32</
                    IMPLEMENTATION-DATA-TYPE-REF>
              </SW-DATA-DEF-PROPS-CONDITIONAL>
            </SW-DATA-DEF-PROPS-VARIANTS>
          </SW-DATA-DEF-PROPS>
        </IMPLEMENTATION-DATA-TYPE>
      </ELEMENTS>
    </AR-PACKAGE>
    <AR-PACKAGE>
      <SHORT-NAME>PortInterfaces</SHORT-NAME>
      <ELEMENTS>
        <SENDER-RECEIVER-INTERFACE>
          <SHORT-NAME>IF_Anton</SHORT-NAME>
          <IS-SERVICE>false</IS-SERVICE>
          <SERVICE-KIND>VENDOR-SPECIFIC</SERVICE-KIND>
          <DATA-ELEMENTS>
            <VARIABLE-DATA-PROTOTYPE>
              <SHORT-NAME>Anton</SHORT-NAME>
              <CATEGORY>VALUE</CATEGORY>
              <SW-DATA-DEF-PROPS>
                <SW-DATA-DEF-PROPS-VARIANTS>
                  <SW-DATA-DEF-PROPS-CONDITIONAL>
                    <SW-CALIBRATION-ACCESS>READ-ONLY</SW-
                        CALIBRATION-ACCESS>
                  </SW-DATA-DEF-PROPS-CONDITIONAL>
                </SW-DATA-DEF-PROPS-VARIANTS>
              </SW-DATA-DEF-PROPS>
              <TYPE-TREF DEST="APPLICATION-PRIMITIVE-DATA-TYPE"
                  >/AUTOSAR/CONC_670/SwcHugo/
                  ApplicationDataTypes/Type_Anton</TYPE-TREF>
            </VARIABLE-DATA-PROTOTYPE>
          </DATA-ELEMENTS>
        </SENDER-RECEIVER-INTERFACE>
        <SENDER-RECEIVER-INTERFACE>
          <SHORT-NAME>IF_Hugo</SHORT-NAME>
          <IS-SERVICE>false</IS-SERVICE>
          <SERVICE-KIND>VENDOR-SPECIFIC</SERVICE-KIND>
          <DATA-ELEMENTS>
            <VARIABLE-DATA-PROTOTYPE>
              <SHORT-NAME>Hugo</SHORT-NAME>
              <CATEGORY>VALUE</CATEGORY>
              <SW-DATA-DEF-PROPS>
                <SW-DATA-DEF-PROPS-VARIANTS>
                  <SW-DATA-DEF-PROPS-CONDITIONAL>
```

```
                        <SW-CALIBRATION-ACCESS>READ-ONLY</SW-
                            CALIBRATION-ACCESS>
                        </SW-DATA-DEF-PROPS-CONDITIONAL>
                      </SW-DATA-DEF-PROPS-VARIANTS>
                    </SW-DATA-DEF-PROPS>
                    <TYPE-TREF DEST="APPLICATION-PRIMITIVE-DATA-TYPE"
                        >/AUTOSAR/CONC_670/SwcHugo/
                        ApplicationDataTypes/Type_Hugo</TYPE-TREF>
                  </VARIABLE-DATA-PROTOTYPE>
                </DATA-ELEMENTS>
              </SENDER-RECEIVER-INTERFACE>
              <CLIENT-SERVER-INTERFACE>
                <SHORT-NAME>IF_OpHugo</SHORT-NAME>
                <IS-SERVICE>false</IS-SERVICE>
                <OPERATIONS>
                  <CLIENT-SERVER-OPERATION>
                    <SHORT-NAME>OpHugo</SHORT-NAME>
                    <ARGUMENTS>
                      <ARGUMENT-DATA-PROTOTYPE>
                        <SHORT-NAME>ArgIn_8</SHORT-NAME>
                        <TYPE-TREF DEST="IMPLEMENTATION-DATA-TYPE">/
                            AUTOSAR_Platform/ImplementationDataTypes/
                            uint8</TYPE-TREF>
                        <DIRECTION>IN</DIRECTION>
                      </ARGUMENT-DATA-PROTOTYPE>
                      <ARGUMENT-DATA-PROTOTYPE>
                        <SHORT-NAME>ArgIn_16</SHORT-NAME>
                        <TYPE-TREF DEST="IMPLEMENTATION-DATA-TYPE">/
                            AUTOSAR_Platform/ImplementationDataTypes/
                            uint16</TYPE-TREF>
                        <DIRECTION>IN</DIRECTION>
                      </ARGUMENT-DATA-PROTOTYPE>
                      <ARGUMENT-DATA-PROTOTYPE>
                        <SHORT-NAME>ArgOut_16</SHORT-NAME>
                        <TYPE-TREF DEST="IMPLEMENTATION-DATA-TYPE">/
                            AUTOSAR_Platform/ImplementationDataTypes/
                            uint16</TYPE-TREF>
                        <DIRECTION>OUT</DIRECTION>
                      </ARGUMENT-DATA-PROTOTYPE>
                    </ARGUMENTS>
                  </CLIENT-SERVER-OPERATION>
                </OPERATIONS>
              </CLIENT-SERVER-INTERFACE>
            </ELEMENTS>
          </AR-PACKAGE>
        </AR-PACKAGES>
      </AR-PACKAGE>
    </AR-PACKAGES>
  </AR-PACKAGE>
</AR-PACKAGES>
</AUTOSAR>
```

Listing A.3: DOC_SwCluC_SwcHugo_SWCD.arxml

A.1.4 DOC_SwCluC_SwcCeline_SWCD.arxml

```
<AUTOSAR xmlns="http://autosar.org/schema/r4.0" xmlns:xsi="http://www.w3.
    org/2001/XMLSchema-instance" xsi:schemaLocation="http://autosar.org/
    schema/r4.0 AUTOSAR_00055.xsd">
  <AR-PACKAGES>
    <AR-PACKAGE>
      <SHORT-NAME>AUTOSAR</SHORT-NAME>
      <AR-PACKAGES>
        <AR-PACKAGE>
          <SHORT-NAME>CONC_670</SHORT-NAME>
          <AR-PACKAGES>
            <AR-PACKAGE>
              <SHORT-NAME>SwcCeline</SHORT-NAME>
              <AR-PACKAGES>
                <AR-PACKAGE>
                  <SHORT-NAME>SwComponentTypes</SHORT-NAME>
                  <ELEMENTS>
                    <APPLICATION-SW-COMPONENT-TYPE>
                      <SHORT-NAME>SwcCeline</SHORT-NAME>
                      <ADMIN-DATA>
                        <SDGS>
                          <SDG GID="Master">
                            <SD>true</SD>
                          </SDG>
                        </SDGS>
                      </ADMIN-DATA>
                      <PORTS>
                        <P-PORT-PROTOTYPE>
                          <SHORT-NAME>PP_Celine</SHORT-NAME>
                          <PROVIDED-INTERFACE-TREF DEST="SENDER-RECEIVER-
                              INTERFACE">/AUTOSAR/CONC_670/SwcCeline/
                              PortInterfaces/IF_Celine</PROVIDED-INTERFACE-
                              TREF>
                        </P-PORT-PROTOTYPE>
                        <R-PORT-PROTOTYPE>
                          <SHORT-NAME>RP_Hugo</SHORT-NAME>
                          <REQUIRED-INTERFACE-TREF DEST="SENDER-RECEIVER-
                              INTERFACE">/AUTOSAR/CONC_670/SwcHugo/
                              PortInterfaces/IF_Hugo</REQUIRED-INTERFACE-
                              TREF>
                        </R-PORT-PROTOTYPE>
                      </PORTS>
                      <INTERNAL-BEHAVIORS>
                        <SWC-INTERNAL-BEHAVIOR>
                          <SHORT-NAME>IB_SwcCeline</SHORT-NAME>
                          <DATA-TYPE-MAPPING-REFS>
                            <DATA-TYPE-MAPPING-REF DEST="DATA-TYPE-MAPPING-
                                SET">/AUTOSAR/CONC_670/SwcCeline/
                                DataTypeMappingSets/DTMS_SwcCeline</DATA-
                                TYPE-MAPPING-REF>
                          </DATA-TYPE-MAPPING-REFS>
                          <EVENTS>
                            <TIMING-EVENT>
```

```
      <SHORT-NAME>TE_SwcCeline_10ms</SHORT-NAME>
      <START-ON-EVENT-REF DEST="RUNNABLE-ENTITY">/
          AUTOSAR/CONC_670/SwcCeline/
          SwComponentTypes/SwcCeline/IB_SwcCeline/
          RE_SwcCeline_10ms</START-ON-EVENT-REF>
      <PERIOD>1.0</PERIOD>
    </TIMING-EVENT>
    <TIMING-EVENT>
      <SHORT-NAME>TE_SwcCeline_50ms</SHORT-NAME>
      <START-ON-EVENT-REF DEST="RUNNABLE-ENTITY">/
          AUTOSAR/CONC_670/SwcCeline/
          SwComponentTypes/SwcCeline/IB_SwcCeline/
          RE_SwcCeline_50ms</START-ON-EVENT-REF>
      <PERIOD>0.5</PERIOD>
    </TIMING-EVENT>
  </EVENTS>
  <IMPLICIT-INTER-RUNNABLE-VARIABLES>
    <VARIABLE-DATA-PROTOTYPE>
      <SHORT-NAME>IIRV_Celine</SHORT-NAME>
      <TYPE-TREF DEST="APPLICATION-PRIMITIVE-DATA-
          TYPE">/AUTOSAR/CONC_670/SwcCeline/
          ApplicationDataTypes/Type_Celine</TYPE-
          TREF>
    </VARIABLE-DATA-PROTOTYPE>
  </IMPLICIT-INTER-RUNNABLE-VARIABLES>
  <RUNNABLES>
    <RUNNABLE-ENTITY>
      <SHORT-NAME>RE_SwcCeline_10ms</SHORT-NAME>
      <CAN-BE-INVOKED-CONCURRENTLY>false</CAN-BE-
          INVOKED-CONCURRENTLY>
      <DATA-WRITE-ACCESSS>
        <VARIABLE-ACCESS>
          <SHORT-NAME>DWA_Celine</SHORT-NAME>
          <ACCESSED-VARIABLE>
            <AUTOSAR-VARIABLE-IREF>
              <PORT-PROTOTYPE-REF DEST="P-PORT-
                  PROTOTYPE">/AUTOSAR/CONC_670/
                  SwcCeline/SwComponentTypes/
                  SwcCeline/PP_Celine</PORT-
                  PROTOTYPE-REF>
              <TARGET-DATA-PROTOTYPE-REF DEST="
                  VARIABLE-DATA-PROTOTYPE">/AUTOSAR/
                  CONC_670/SwcCeline/PortInterfaces/
                  IF_Celine/Celine</TARGET-DATA-
                  PROTOTYPE-REF>
            </AUTOSAR-VARIABLE-IREF>
          </ACCESSED-VARIABLE>
        </VARIABLE-ACCESS>
      </DATA-WRITE-ACCESSS>
      <READ-LOCAL-VARIABLES>
        <VARIABLE-ACCESS>
          <SHORT-NAME>RLV_IIRV_Celine</SHORT-NAME>
          <ACCESSED-VARIABLE>
```

```
                    <LOCAL-VARIABLE-REF DEST="VARIABLE-DATA
                        -PROTOTYPE">/AUTOSAR/CONC_670/
                        SwcCeline/SwComponentTypes/SwcCeline
                        /IB_SwcCeline/IIRV_Celine</LOCAL-
                        VARIABLE-REF>
                  </ACCESSED-VARIABLE>
                </VARIABLE-ACCESS>
              </READ-LOCAL-VARIABLES>
              <SYMBOL>RE_SwcCeline_10ms</SYMBOL>
            </RUNNABLE-ENTITY>
            <RUNNABLE-ENTITY>
              <SHORT-NAME>RE_SwcCeline_50ms</SHORT-NAME>
              <READ-LOCAL-VARIABLES>
                <VARIABLE-ACCESS>
                  <SHORT-NAME>RLV_IIRV_Celine</SHORT-NAME>
                  <ACCESSED-VARIABLE>
                    <LOCAL-VARIABLE-REF DEST="VARIABLE-DATA
                        -PROTOTYPE">/AUTOSAR/CONC_670/
                        SwcCeline/SwComponentTypes/SwcCeline
                        /IB_SwcCeline/IIRV_Celine</LOCAL-
                        VARIABLE-REF>
                  </ACCESSED-VARIABLE>
                </VARIABLE-ACCESS>
              </READ-LOCAL-VARIABLES>
              <SYMBOL>RE_SwcCeline_50ms</SYMBOL>
              <WRITTEN-LOCAL-VARIABLES>
                <VARIABLE-ACCESS>
                  <SHORT-NAME>WLV_IIRV_Celine</SHORT-NAME>
                  <ACCESSED-VARIABLE>
                    <LOCAL-VARIABLE-REF DEST="VARIABLE-DATA
                        -PROTOTYPE">/AUTOSAR/CONC_670/
                        SwcCeline/SwComponentTypes/SwcCeline
                        /IB_SwcCeline/IIRV_Celine</LOCAL-
                        VARIABLE-REF>
                  </ACCESSED-VARIABLE>
                </VARIABLE-ACCESS>
              </WRITTEN-LOCAL-VARIABLES>
            </RUNNABLE-ENTITY>
          </RUNNABLES>
          <SUPPORTS-MULTIPLE-INSTANTIATION>false</SUPPORTS-
              MULTIPLE-INSTANTIATION>
        </SWC-INTERNAL-BEHAVIOR>
      </INTERNAL-BEHAVIORS>
    </APPLICATION-SW-COMPONENT-TYPE>
  </ELEMENTS>
</AR-PACKAGE>
<AR-PACKAGE>
  <SHORT-NAME>SwcImplementations</SHORT-NAME>
  <ELEMENTS>
    <SWC-IMPLEMENTATION>
      <SHORT-NAME>IMPL_SwcCeline</SHORT-NAME>
      <CODE-DESCRIPTORS>
        <CODE>
          <SHORT-NAME>Code</SHORT-NAME>
          <ARTIFACT-DESCRIPTORS>
            <AUTOSAR-ENGINEERING-OBJECT>
```

```
                <SHORT-LABEL>AutosarEngineeringObject</SHORT-
                    LABEL>
                <CATEGORY>SWSRC</CATEGORY>
              </AUTOSAR-ENGINEERING-OBJECT>
            </ARTIFACT-DESCRIPTORS>
          </CODE>
        </CODE-DESCRIPTORS>
        <PROGRAMMING-LANGUAGE>C</PROGRAMMING-LANGUAGE>
        <BEHAVIOR-REF DEST="SWC-INTERNAL-BEHAVIOR">/AUTOSAR/
            CONC_670/SwcCeline/SwComponentTypes/SwcCeline/
            IB_SwcCeline</BEHAVIOR-REF>
      </SWC-IMPLEMENTATION>
    </ELEMENTS>
  </AR-PACKAGE>
  <AR-PACKAGE>
    <SHORT-NAME>ApplicationDataTypes</SHORT-NAME>
    <ELEMENTS>
      <APPLICATION-PRIMITIVE-DATA-TYPE>
        <SHORT-NAME>Type_Anton</SHORT-NAME>
        <CATEGORY>VALUE</CATEGORY>
        <SW-DATA-DEF-PROPS>
          <SW-DATA-DEF-PROPS-VARIANTS>
            <SW-DATA-DEF-PROPS-CONDITIONAL>
              <SW-CALIBRATION-ACCESS>READ-ONLY</SW-
                  CALIBRATION-ACCESS>
              <COMPU-METHOD-REF DEST="COMPU-METHOD">/AUTOSAR/
                  CONC_670/SwcCeline/CompuMethods/Identical</
                  COMPU-METHOD-REF>
              <SW-IMPL-POLICY>STANDARD</SW-IMPL-POLICY>
            </SW-DATA-DEF-PROPS-CONDITIONAL>
          </SW-DATA-DEF-PROPS-VARIANTS>
        </SW-DATA-DEF-PROPS>
      </APPLICATION-PRIMITIVE-DATA-TYPE>
      <APPLICATION-PRIMITIVE-DATA-TYPE>
        <SHORT-NAME>Type_Hugo</SHORT-NAME>
        <CATEGORY>VALUE</CATEGORY>
        <SW-DATA-DEF-PROPS>
          <SW-DATA-DEF-PROPS-VARIANTS>
            <SW-DATA-DEF-PROPS-CONDITIONAL>
              <SW-CALIBRATION-ACCESS>READ-ONLY</SW-
                  CALIBRATION-ACCESS>
              <COMPU-METHOD-REF DEST="COMPU-METHOD">/AUTOSAR/
                  CONC_670/SwcCeline/CompuMethods/Identical</
                  COMPU-METHOD-REF>
              <SW-IMPL-POLICY>STANDARD</SW-IMPL-POLICY>
            </SW-DATA-DEF-PROPS-CONDITIONAL>
          </SW-DATA-DEF-PROPS-VARIANTS>
        </SW-DATA-DEF-PROPS>
      </APPLICATION-PRIMITIVE-DATA-TYPE>
      <APPLICATION-PRIMITIVE-DATA-TYPE>
        <SHORT-NAME>Type_Bernd</SHORT-NAME>
        <CATEGORY>VALUE</CATEGORY>
        <SW-DATA-DEF-PROPS>
          <SW-DATA-DEF-PROPS-VARIANTS>
            <SW-DATA-DEF-PROPS-CONDITIONAL>
```

```
                <SW-CALIBRATION-ACCESS>READ-ONLY</SW-
                    CALIBRATION-ACCESS>
                <COMPU-METHOD-REF DEST="COMPU-METHOD">/AUTOSAR/
                    CONC_670/SwcCeline/CompuMethods/Identical</
                    COMPU-METHOD-REF>
                <SW-IMPL-POLICY>STANDARD</SW-IMPL-POLICY>
              </SW-DATA-DEF-PROPS-CONDITIONAL>
            </SW-DATA-DEF-PROPS-VARIANTS>
          </SW-DATA-DEF-PROPS>
        </APPLICATION-PRIMITIVE-DATA-TYPE>
        <APPLICATION-PRIMITIVE-DATA-TYPE>
          <SHORT-NAME>Type_Celine</SHORT-NAME>
          <CATEGORY>VALUE</CATEGORY>
          <SW-DATA-DEF-PROPS>
            <SW-DATA-DEF-PROPS-VARIANTS>
              <SW-DATA-DEF-PROPS-CONDITIONAL>
                <SW-CALIBRATION-ACCESS>READ-ONLY</SW-
                    CALIBRATION-ACCESS>
                <COMPU-METHOD-REF DEST="COMPU-METHOD">/AUTOSAR/
                    CONC_670/SwcCeline/CompuMethods/Identical</
                    COMPU-METHOD-REF>
                <SW-IMPL-POLICY>STANDARD</SW-IMPL-POLICY>
              </SW-DATA-DEF-PROPS-CONDITIONAL>
            </SW-DATA-DEF-PROPS-VARIANTS>
          </SW-DATA-DEF-PROPS>
        </APPLICATION-PRIMITIVE-DATA-TYPE>
      </ELEMENTS>
    </AR-PACKAGE>
    <AR-PACKAGE>
      <SHORT-NAME>CompuMethods</SHORT-NAME>
      <ELEMENTS>
        <COMPU-METHOD>
          <SHORT-NAME>Identical</SHORT-NAME>
          <CATEGORY>IDENTICAL</CATEGORY>
          <UNIT-REF DEST="UNIT">/AUTOSAR/CONC_670/SwcCeline/
              Units/No_Unit</UNIT-REF>
        </COMPU-METHOD>
      </ELEMENTS>
    </AR-PACKAGE>
    <AR-PACKAGE>
      <SHORT-NAME>Units</SHORT-NAME>
      <ELEMENTS>
        <UNIT>
          <SHORT-NAME>No_Unit</SHORT-NAME>
          <FACTOR-SI-TO-UNIT>1.0</FACTOR-SI-TO-UNIT>
          <OFFSET-SI-TO-UNIT>0.0</OFFSET-SI-TO-UNIT>
        </UNIT>
      </ELEMENTS>
    </AR-PACKAGE>
    <AR-PACKAGE>
      <SHORT-NAME>DataTypeMappingSets</SHORT-NAME>
      <ELEMENTS>
        <DATA-TYPE-MAPPING-SET>
          <SHORT-NAME>DTMS_SwcCeline</SHORT-NAME>
          <DATA-TYPE-MAPS>
            <DATA-TYPE-MAP>
```

```
          <APPLICATION-DATA-TYPE-REF DEST="APPLICATION-
              PRIMITIVE-DATA-TYPE">/AUTOSAR/CONC_670/
              SwcCeline/ApplicationDataTypes/Type_Anton</
              APPLICATION-DATA-TYPE-REF>
          <IMPLEMENTATION-DATA-TYPE-REF DEST="
              IMPLEMENTATION-DATA-TYPE">/AUTOSAR/CONC_670/
              SwcCeline/ImplementationDataTypes/Type_Anton</
              IMPLEMENTATION-DATA-TYPE-REF>
        </DATA-TYPE-MAP>
        <DATA-TYPE-MAP>
          <APPLICATION-DATA-TYPE-REF DEST="APPLICATION-
              PRIMITIVE-DATA-TYPE">/AUTOSAR/CONC_670/
              SwcCeline/ApplicationDataTypes/Type_Hugo</
              APPLICATION-DATA-TYPE-REF>
          <IMPLEMENTATION-DATA-TYPE-REF DEST="
              IMPLEMENTATION-DATA-TYPE">/AUTOSAR/CONC_670/
              SwcCeline/ImplementationDataTypes/Type_Hugo</
              IMPLEMENTATION-DATA-TYPE-REF>
        </DATA-TYPE-MAP>
        <DATA-TYPE-MAP>
          <APPLICATION-DATA-TYPE-REF DEST="APPLICATION-
              PRIMITIVE-DATA-TYPE">/AUTOSAR/CONC_670/
              SwcCeline/ApplicationDataTypes/Type_Bernd</
              APPLICATION-DATA-TYPE-REF>
          <IMPLEMENTATION-DATA-TYPE-REF DEST="
              IMPLEMENTATION-DATA-TYPE">/AUTOSAR/CONC_670/
              SwcCeline/ImplementationDataTypes/Type_Bernd</
              IMPLEMENTATION-DATA-TYPE-REF>
        </DATA-TYPE-MAP>
        <DATA-TYPE-MAP>
          <APPLICATION-DATA-TYPE-REF DEST="APPLICATION-
              PRIMITIVE-DATA-TYPE">/AUTOSAR/CONC_670/
              SwcCeline/ApplicationDataTypes/Type_Celine</
              APPLICATION-DATA-TYPE-REF>
          <IMPLEMENTATION-DATA-TYPE-REF DEST="
              IMPLEMENTATION-DATA-TYPE">/AUTOSAR/CONC_670/
              SwcCeline/ImplementationDataTypes/Type_Celine<
              /IMPLEMENTATION-DATA-TYPE-REF>
        </DATA-TYPE-MAP>
      </DATA-TYPE-MAPS>
    </DATA-TYPE-MAPPING-SET>
  </ELEMENTS>
</AR-PACKAGE>
<AR-PACKAGE>
  <SHORT-NAME>ImplementationDataTypes</SHORT-NAME>
  <ELEMENTS>
    <IMPLEMENTATION-DATA-TYPE>
      <SHORT-NAME>Type_Anton</SHORT-NAME>
      <CATEGORY>TYPE_REFERENCE</CATEGORY>
      <SW-DATA-DEF-PROPS>
        <SW-DATA-DEF-PROPS-VARIANTS>
          <SW-DATA-DEF-PROPS-CONDITIONAL>
            <IMPLEMENTATION-DATA-TYPE-REF DEST="
                IMPLEMENTATION-DATA-TYPE">/AUTOSAR_Platform/
                ImplementationDataTypes/uint16</
                IMPLEMENTATION-DATA-TYPE-REF>
```

```
            </SW-DATA-DEF-PROPS-CONDITIONAL>
          </SW-DATA-DEF-PROPS-VARIANTS>
        </SW-DATA-DEF-PROPS>
      </IMPLEMENTATION-DATA-TYPE>
      <IMPLEMENTATION-DATA-TYPE>
        <SHORT-NAME>Type_Hugo</SHORT-NAME>
        <CATEGORY>TYPE_REFERENCE</CATEGORY>
        <SW-DATA-DEF-PROPS>
          <SW-DATA-DEF-PROPS-VARIANTS>
            <SW-DATA-DEF-PROPS-CONDITIONAL>
              <IMPLEMENTATION-DATA-TYPE-REF DEST="
                  IMPLEMENTATION-DATA-TYPE">/AUTOSAR_Platform/
                  ImplementationDataTypes/uint32</
                  IMPLEMENTATION-DATA-TYPE-REF>
            </SW-DATA-DEF-PROPS-CONDITIONAL>
          </SW-DATA-DEF-PROPS-VARIANTS>
        </SW-DATA-DEF-PROPS>
      </IMPLEMENTATION-DATA-TYPE>
      <IMPLEMENTATION-DATA-TYPE>
        <SHORT-NAME>Type_Bernd</SHORT-NAME>
        <CATEGORY>TYPE_REFERENCE</CATEGORY>
        <SW-DATA-DEF-PROPS>
          <SW-DATA-DEF-PROPS-VARIANTS>
            <SW-DATA-DEF-PROPS-CONDITIONAL>
              <IMPLEMENTATION-DATA-TYPE-REF DEST="
                  IMPLEMENTATION-DATA-TYPE">/AUTOSAR_Platform/
                  ImplementationDataTypes/uint8</
                  IMPLEMENTATION-DATA-TYPE-REF>
            </SW-DATA-DEF-PROPS-CONDITIONAL>
          </SW-DATA-DEF-PROPS-VARIANTS>
        </SW-DATA-DEF-PROPS>
      </IMPLEMENTATION-DATA-TYPE>
      <IMPLEMENTATION-DATA-TYPE>
        <SHORT-NAME>Type_Celine</SHORT-NAME>
        <CATEGORY>TYPE_REFERENCE</CATEGORY>
        <SW-DATA-DEF-PROPS>
          <SW-DATA-DEF-PROPS-VARIANTS>
            <SW-DATA-DEF-PROPS-CONDITIONAL>
              <IMPLEMENTATION-DATA-TYPE-REF DEST="
                  IMPLEMENTATION-DATA-TYPE">/AUTOSAR_Platform/
                  ImplementationDataTypes/sint16</
                  IMPLEMENTATION-DATA-TYPE-REF>
            </SW-DATA-DEF-PROPS-CONDITIONAL>
          </SW-DATA-DEF-PROPS-VARIANTS>
        </SW-DATA-DEF-PROPS>
      </IMPLEMENTATION-DATA-TYPE>
    </ELEMENTS>
  </AR-PACKAGE>
  <AR-PACKAGE>
    <SHORT-NAME>PortInterfaces</SHORT-NAME>
    <ELEMENTS>
      <SENDER-RECEIVER-INTERFACE>
        <SHORT-NAME>IF_Anton</SHORT-NAME>
        <IS-SERVICE>false</IS-SERVICE>
        <SERVICE-KIND>VENDOR-SPECIFIC</SERVICE-KIND>
        <DATA-ELEMENTS>
```

```
      <VARIABLE-DATA-PROTOTYPE>
        <SHORT-NAME>Anton</SHORT-NAME>
        <CATEGORY>VALUE</CATEGORY>
        <SW-DATA-DEF-PROPS>
          <SW-DATA-DEF-PROPS-VARIANTS>
            <SW-DATA-DEF-PROPS-CONDITIONAL>
              <SW-CALIBRATION-ACCESS>READ-ONLY</SW-
                  CALIBRATION-ACCESS>
            </SW-DATA-DEF-PROPS-CONDITIONAL>
          </SW-DATA-DEF-PROPS-VARIANTS>
        </SW-DATA-DEF-PROPS>
        <TYPE-TREF DEST="APPLICATION-PRIMITIVE-DATA-TYPE"
            >/AUTOSAR/CONC_670/SwcCeline/
            ApplicationDataTypes/Type_Anton</TYPE-TREF>
      </VARIABLE-DATA-PROTOTYPE>
    </DATA-ELEMENTS>
  </SENDER-RECEIVER-INTERFACE>
  <SENDER-RECEIVER-INTERFACE>
    <SHORT-NAME>IF_Hugo</SHORT-NAME>
    <IS-SERVICE>false</IS-SERVICE>
    <SERVICE-KIND>VENDOR-SPECIFIC</SERVICE-KIND>
    <DATA-ELEMENTS>
      <VARIABLE-DATA-PROTOTYPE>
        <SHORT-NAME>Anton</SHORT-NAME>
        <CATEGORY>VALUE</CATEGORY>
        <SW-DATA-DEF-PROPS>
          <SW-DATA-DEF-PROPS-VARIANTS>
            <SW-DATA-DEF-PROPS-CONDITIONAL>
              <SW-CALIBRATION-ACCESS>READ-ONLY</SW-
                  CALIBRATION-ACCESS>
            </SW-DATA-DEF-PROPS-CONDITIONAL>
          </SW-DATA-DEF-PROPS-VARIANTS>
        </SW-DATA-DEF-PROPS>
        <TYPE-TREF DEST="APPLICATION-PRIMITIVE-DATA-TYPE"
            >/AUTOSAR/CONC_670/SwcCeline/
            ApplicationDataTypes/Type_Hugo</TYPE-TREF>
      </VARIABLE-DATA-PROTOTYPE>
    </DATA-ELEMENTS>
  </SENDER-RECEIVER-INTERFACE>
  <SENDER-RECEIVER-INTERFACE>
    <SHORT-NAME>IF_Bernd</SHORT-NAME>
    <IS-SERVICE>false</IS-SERVICE>
    <SERVICE-KIND>VENDOR-SPECIFIC</SERVICE-KIND>
    <DATA-ELEMENTS>
      <VARIABLE-DATA-PROTOTYPE>
        <SHORT-NAME>Bernd</SHORT-NAME>
        <CATEGORY>VALUE</CATEGORY>
        <SW-DATA-DEF-PROPS>
          <SW-DATA-DEF-PROPS-VARIANTS>
            <SW-DATA-DEF-PROPS-CONDITIONAL>
              <SW-CALIBRATION-ACCESS>READ-ONLY</SW-
                  CALIBRATION-ACCESS>
            </SW-DATA-DEF-PROPS-CONDITIONAL>
          </SW-DATA-DEF-PROPS-VARIANTS>
        </SW-DATA-DEF-PROPS>
```

```
                        <TYPE-TREF DEST="APPLICATION-PRIMITIVE-DATA-TYPE"
                            >/AUTOSAR/CONC_670/SwcCeline/
                            ApplicationDataTypes/Type_Bernd</TYPE-TREF>
                      </VARIABLE-DATA-PROTOTYPE>
                    </DATA-ELEMENTS>
                  </SENDER-RECEIVER-INTERFACE>
                  <SENDER-RECEIVER-INTERFACE>
                    <SHORT-NAME>IF_Celine</SHORT-NAME>
                    <IS-SERVICE>false</IS-SERVICE>
                    <SERVICE-KIND>VENDOR-SPECIFIC</SERVICE-KIND>
                    <DATA-ELEMENTS>
                      <VARIABLE-DATA-PROTOTYPE>
                        <SHORT-NAME>Celine</SHORT-NAME>
                        <CATEGORY>VALUE</CATEGORY>
                        <SW-DATA-DEF-PROPS>
                          <SW-DATA-DEF-PROPS-VARIANTS>
                            <SW-DATA-DEF-PROPS-CONDITIONAL>
                              <SW-CALIBRATION-ACCESS>READ-ONLY</SW-
                                  CALIBRATION-ACCESS>
                            </SW-DATA-DEF-PROPS-CONDITIONAL>
                          </SW-DATA-DEF-PROPS-VARIANTS>
                        </SW-DATA-DEF-PROPS>
                        <TYPE-TREF DEST="APPLICATION-PRIMITIVE-DATA-TYPE"
                            >/AUTOSAR/CONC_670/SwcCeline/
                            ApplicationDataTypes/Type_Celine</TYPE-TREF>
                      </VARIABLE-DATA-PROTOTYPE>
                    </DATA-ELEMENTS>
                  </SENDER-RECEIVER-INTERFACE>
                </ELEMENTS>
              </AR-PACKAGE>
            </AR-PACKAGES>
          </AR-PACKAGE>
        </AR-PACKAGES>
      </AR-PACKAGE>
    </AR-PACKAGES>
  </AR-PACKAGE>
</AUTOSAR>
```

Listing A.4: DOC_SwCluC_SwcCeline_SWCD.arxml

A.1.5 DOC_SwCluC_SwcClaus_SWCD.arxml

```
<AUTOSAR xmlns="http://autosar.org/schema/r4.0" xmlns:xsi="http://www.w3.
    org/2001/XMLSchema-instance" xsi:schemaLocation="http://autosar.org/
    schema/r4.0 AUTOSAR_00055.xsd">
  <AR-PACKAGES>
    <AR-PACKAGE>
      <SHORT-NAME>AUTOSAR</SHORT-NAME>
      <AR-PACKAGES>
        <AR-PACKAGE>
          <SHORT-NAME>CONC_670</SHORT-NAME>
```

```
<AR-PACKAGES>
  <AR-PACKAGE>
    <SHORT-NAME>SwcClaus</SHORT-NAME>
    <AR-PACKAGES>
      <AR-PACKAGE>
        <SHORT-NAME>SwComponentTypes</SHORT-NAME>
        <ELEMENTS>
          <APPLICATION-SW-COMPONENT-TYPE>
            <SHORT-NAME>SwcClaus</SHORT-NAME>
            <ADMIN-DATA>
              <SDGS>
                <SDG GID="Master">
                  <SD>true</SD>
                </SDG>
              </SDGS>
            </ADMIN-DATA>
            <PORTS>
              <R-PORT-PROTOTYPE>
                <SHORT-NAME>RP_Celine</SHORT-NAME>
                <REQUIRED-INTERFACE-TREF DEST="SENDER-RECEIVER-
                    INTERFACE">/AUTOSAR/CONC_670/SwcClaus/
                    PortInterfaces/IF_Celine</REQUIRED-INTERFACE-
                    TREF>
              </R-PORT-PROTOTYPE>
              <R-PORT-PROTOTYPE>
                <SHORT-NAME>RP_Bernd</SHORT-NAME>
                <REQUIRED-INTERFACE-TREF DEST="SENDER-RECEIVER-
                    INTERFACE">/AUTOSAR/CONC_670/SwcClaus/
                    PortInterfaces/IF_Bernd</REQUIRED-INTERFACE-
                    TREF>
              </R-PORT-PROTOTYPE>
              <P-PORT-PROTOTYPE>
                <SHORT-NAME>PP_OpClaus</SHORT-NAME>
                <PROVIDED-INTERFACE-TREF DEST="CLIENT-SERVER-
                    INTERFACE">/AUTOSAR/CONC_670/SwcClaus/
                    PortInterfaces/IF_OpClaus</PROVIDED-INTERFACE-
                    TREF>
              </P-PORT-PROTOTYPE>
            </PORTS>
            <INTERNAL-BEHAVIORS>
              <SWC-INTERNAL-BEHAVIOR>
                <SHORT-NAME>IB_SwcClaus</SHORT-NAME>
                <DATA-TYPE-MAPPING-REFS>
                  <DATA-TYPE-MAPPING-REF DEST="DATA-TYPE-MAPPING-
                      SET">/AUTOSAR/CONC_670/SwcClaus/
                      DataTypeMappingSets/DTMS_SwcClaus</DATA-TYPE
                      -MAPPING-REF>
                </DATA-TYPE-MAPPING-REFS>
                <EVENTS>
                  <TIMING-EVENT>
                    <SHORT-NAME>TE_SwcClaus_10ms</SHORT-NAME>
                    <START-ON-EVENT-REF DEST="RUNNABLE-ENTITY">/
                        AUTOSAR/CONC_670/SwcClaus/SwComponentTypes
                        /SwcClaus/IB_SwcClaus/RE_SwcClaus_10ms</
                        START-ON-EVENT-REF>
                    <PERIOD>1.0</PERIOD>
```

```
      </TIMING-EVENT>
      <OPERATION-INVOKED-EVENT>
        <SHORT-NAME>OIE_OpClaus</SHORT-NAME>
        <START-ON-EVENT-REF DEST="RUNNABLE-ENTITY">/
            AUTOSAR/CONC_670/SwcClaus/SwComponentTypes
            /SwcClaus/IB_SwcClaus/RE_SwcClaus_Claus</
            START-ON-EVENT-REF>
        <OPERATION-IREF>
          <CONTEXT-P-PORT-REF DEST="P-PORT-PROTOTYPE"
              >/AUTOSAR/CONC_670/SwcClaus/
              SwComponentTypes/SwcClaus/PP_OpClaus</
              CONTEXT-P-PORT-REF>
          <TARGET-PROVIDED-OPERATION-REF DEST="CLIENT
              -SERVER-OPERATION">/AUTOSAR/CONC_670/
              SwcClaus/PortInterfaces/IF_OpClaus/
              OpClaus</TARGET-PROVIDED-OPERATION-REF>
        </OPERATION-IREF>
      </OPERATION-INVOKED-EVENT>
    </EVENTS>
    <RUNNABLES>
      <RUNNABLE-ENTITY>
        <SHORT-NAME>RE_SwcClaus_10ms</SHORT-NAME>
        <CAN-BE-INVOKED-CONCURRENTLY>false</CAN-BE-
            INVOKED-CONCURRENTLY>
        <DATA-READ-ACCESSS>
          <VARIABLE-ACCESS>
            <SHORT-NAME>DRA_Celine</SHORT-NAME>
            <ACCESSED-VARIABLE>
              <AUTOSAR-VARIABLE-IREF>
                <PORT-PROTOTYPE-REF DEST="R-PORT-
                    PROTOTYPE">/AUTOSAR/CONC_670/
                    SwcClaus/SwComponentTypes/SwcClaus
                    /RP_Celine</PORT-PROTOTYPE-REF>
                <TARGET-DATA-PROTOTYPE-REF DEST="
                    VARIABLE-DATA-PROTOTYPE">/AUTOSAR/
                    CONC_670/SwcClaus/PortInterfaces/
                    IF_Celine/Celine</TARGET-DATA-
                    PROTOTYPE-REF>
              </AUTOSAR-VARIABLE-IREF>
            </ACCESSED-VARIABLE>
          </VARIABLE-ACCESS>
          <VARIABLE-ACCESS>
            <SHORT-NAME>DRA_Bernd_0</SHORT-NAME>
            <ACCESSED-VARIABLE>
              <AUTOSAR-VARIABLE-IREF>
                <PORT-PROTOTYPE-REF DEST="R-PORT-
                    PROTOTYPE">/AUTOSAR/CONC_670/
                    SwcClaus/SwComponentTypes/SwcClaus
                    /RP_Bernd</PORT-PROTOTYPE-REF>
                <TARGET-DATA-PROTOTYPE-REF DEST="
                    VARIABLE-DATA-PROTOTYPE">/AUTOSAR/
                    CONC_670/SwcClaus/PortInterfaces/
                    IF_Bernd/Bernd</TARGET-DATA-
                    PROTOTYPE-REF>
              </AUTOSAR-VARIABLE-IREF>
            </ACCESSED-VARIABLE>
```

```
                    </VARIABLE-ACCESS>
                  </DATA-READ-ACCESSS>
                  <SYMBOL>RE_SwcClaus_10ms</SYMBOL>
                </RUNNABLE-ENTITY>
                <RUNNABLE-ENTITY>
                  <SHORT-NAME>RE_SwcClaus_Claus</SHORT-NAME>
                  <SYMBOL>RE_SwcClaus_Claus</SYMBOL>
                </RUNNABLE-ENTITY>
              </RUNNABLES>
              <SUPPORTS-MULTIPLE-INSTANTIATION>false</SUPPORTS-
                  MULTIPLE-INSTANTIATION>
            </SWC-INTERNAL-BEHAVIOR>
          </INTERNAL-BEHAVIORS>
        </APPLICATION-SW-COMPONENT-TYPE>
      </ELEMENTS>
    </AR-PACKAGE>
    <AR-PACKAGE>
      <SHORT-NAME>SwcImplementations</SHORT-NAME>
      <ELEMENTS>
        <SWC-IMPLEMENTATION>
          <SHORT-NAME>IMPL_SwcClaus</SHORT-NAME>
          <CODE-DESCRIPTORS>
            <CODE>
              <SHORT-NAME>Code</SHORT-NAME>
              <ARTIFACT-DESCRIPTORS>
                <AUTOSAR-ENGINEERING-OBJECT>
                  <SHORT-LABEL>AutosarEngineeringObject</SHORT-
                      LABEL>
                  <CATEGORY>SWSRC</CATEGORY>
                </AUTOSAR-ENGINEERING-OBJECT>
              </ARTIFACT-DESCRIPTORS>
            </CODE>
          </CODE-DESCRIPTORS>
          <PROGRAMMING-LANGUAGE>C</PROGRAMMING-LANGUAGE>
          <BEHAVIOR-REF DEST="SWC-INTERNAL-BEHAVIOR">/AUTOSAR/
              CONC_670/SwcClaus/SwComponentTypes/SwcClaus/
              IB_SwcClaus</BEHAVIOR-REF>
        </SWC-IMPLEMENTATION>
      </ELEMENTS>
    </AR-PACKAGE>
    <AR-PACKAGE>
      <SHORT-NAME>ApplicationDataTypes</SHORT-NAME>
      <ELEMENTS>
        <APPLICATION-PRIMITIVE-DATA-TYPE>
          <SHORT-NAME>Type_Claus</SHORT-NAME>
          <CATEGORY>VALUE</CATEGORY>
          <SW-DATA-DEF-PROPS>
            <SW-DATA-DEF-PROPS-VARIANTS>
              <SW-DATA-DEF-PROPS-CONDITIONAL>
                <SW-CALIBRATION-ACCESS>READ-ONLY</SW-
                    CALIBRATION-ACCESS>
                <COMPU-METHOD-REF DEST="COMPU-METHOD">/AUTOSAR/
                    CONC_670/SwcClaus/CompuMethods/Identical</
                    COMPU-METHOD-REF>
                <SW-IMPL-POLICY>STANDARD</SW-IMPL-POLICY>
              </SW-DATA-DEF-PROPS-CONDITIONAL>
```

```
            </SW-DATA-DEF-PROPS-VARIANTS>
          </SW-DATA-DEF-PROPS>
        </APPLICATION-PRIMITIVE-DATA-TYPE>
        <APPLICATION-PRIMITIVE-DATA-TYPE>
          <SHORT-NAME>Type_Hugo</SHORT-NAME>
          <CATEGORY>VALUE</CATEGORY>
          <SW-DATA-DEF-PROPS>
            <SW-DATA-DEF-PROPS-VARIANTS>
              <SW-DATA-DEF-PROPS-CONDITIONAL>
                <SW-CALIBRATION-ACCESS>READ-ONLY</SW-
                    CALIBRATION-ACCESS>
                <COMPU-METHOD-REF DEST="COMPU-METHOD">/AUTOSAR/
                    CONC_670/SwcClaus/CompuMethods/Identical</
                    COMPU-METHOD-REF>
                <SW-IMPL-POLICY>STANDARD</SW-IMPL-POLICY>
              </SW-DATA-DEF-PROPS-CONDITIONAL>
            </SW-DATA-DEF-PROPS-VARIANTS>
          </SW-DATA-DEF-PROPS>
        </APPLICATION-PRIMITIVE-DATA-TYPE>
        <APPLICATION-PRIMITIVE-DATA-TYPE>
          <SHORT-NAME>Type_Bernd</SHORT-NAME>
          <CATEGORY>VALUE</CATEGORY>
          <SW-DATA-DEF-PROPS>
            <SW-DATA-DEF-PROPS-VARIANTS>
              <SW-DATA-DEF-PROPS-CONDITIONAL>
                <SW-CALIBRATION-ACCESS>READ-ONLY</SW-
                    CALIBRATION-ACCESS>
                <COMPU-METHOD-REF DEST="COMPU-METHOD">/AUTOSAR/
                    CONC_670/SwcClaus/CompuMethods/Identical</
                    COMPU-METHOD-REF>
                <SW-IMPL-POLICY>STANDARD</SW-IMPL-POLICY>
              </SW-DATA-DEF-PROPS-CONDITIONAL>
            </SW-DATA-DEF-PROPS-VARIANTS>
          </SW-DATA-DEF-PROPS>
        </APPLICATION-PRIMITIVE-DATA-TYPE>
        <APPLICATION-PRIMITIVE-DATA-TYPE>
          <SHORT-NAME>Type_Celine</SHORT-NAME>
          <CATEGORY>VALUE</CATEGORY>
          <SW-DATA-DEF-PROPS>
            <SW-DATA-DEF-PROPS-VARIANTS>
              <SW-DATA-DEF-PROPS-CONDITIONAL>
                <SW-CALIBRATION-ACCESS>READ-ONLY</SW-
                    CALIBRATION-ACCESS>
                <COMPU-METHOD-REF DEST="COMPU-METHOD">/AUTOSAR/
                    CONC_670/SwcClaus/CompuMethods/Identical</
                    COMPU-METHOD-REF>
                <SW-IMPL-POLICY>STANDARD</SW-IMPL-POLICY>
              </SW-DATA-DEF-PROPS-CONDITIONAL>
            </SW-DATA-DEF-PROPS-VARIANTS>
          </SW-DATA-DEF-PROPS>
        </APPLICATION-PRIMITIVE-DATA-TYPE>
      </ELEMENTS>
    </AR-PACKAGE>
    <AR-PACKAGE>
      <SHORT-NAME>CompuMethods</SHORT-NAME>
      <ELEMENTS>
```

```
      <COMPU-METHOD>
        <SHORT-NAME>Identical</SHORT-NAME>
        <CATEGORY>IDENTICAL</CATEGORY>
        <UNIT-REF DEST="UNIT">/AUTOSAR/CONC_670/SwcClaus/
            Units/No_Unit</UNIT-REF>
      </COMPU-METHOD>
    </ELEMENTS>
  </AR-PACKAGE>
  <AR-PACKAGE>
    <SHORT-NAME>Units</SHORT-NAME>
    <ELEMENTS>
      <UNIT>
        <SHORT-NAME>No_Unit</SHORT-NAME>
        <FACTOR-SI-TO-UNIT>1.0</FACTOR-SI-TO-UNIT>
        <OFFSET-SI-TO-UNIT>0.0</OFFSET-SI-TO-UNIT>
      </UNIT>
    </ELEMENTS>
  </AR-PACKAGE>
  <AR-PACKAGE>
    <SHORT-NAME>DataTypeMappingSets</SHORT-NAME>
    <ELEMENTS>
      <DATA-TYPE-MAPPING-SET>
        <SHORT-NAME>DTMS_SwcClaus</SHORT-NAME>
        <DATA-TYPE-MAPS>
          <DATA-TYPE-MAP>
            <APPLICATION-DATA-TYPE-REF DEST="APPLICATION-
                PRIMITIVE-DATA-TYPE">/AUTOSAR/CONC_670/
                SwcClaus/ApplicationDataTypes/Type_Claus</
                APPLICATION-DATA-TYPE-REF>
            <IMPLEMENTATION-DATA-TYPE-REF DEST="
                IMPLEMENTATION-DATA-TYPE">/AUTOSAR/CONC_670/
                SwcClaus/ImplementationDataTypes/Type_Claus</
                IMPLEMENTATION-DATA-TYPE-REF>
          </DATA-TYPE-MAP>
          <DATA-TYPE-MAP>
            <APPLICATION-DATA-TYPE-REF DEST="APPLICATION-
                PRIMITIVE-DATA-TYPE">/AUTOSAR/CONC_670/
                SwcClaus/ApplicationDataTypes/Type_Hugo</
                APPLICATION-DATA-TYPE-REF>
            <IMPLEMENTATION-DATA-TYPE-REF DEST="
                IMPLEMENTATION-DATA-TYPE">/AUTOSAR/CONC_670/
                SwcClaus/ImplementationDataTypes/Type_Hugo</
                IMPLEMENTATION-DATA-TYPE-REF>
          </DATA-TYPE-MAP>
          <DATA-TYPE-MAP>
            <APPLICATION-DATA-TYPE-REF DEST="APPLICATION-
                PRIMITIVE-DATA-TYPE">/AUTOSAR/CONC_670/
                SwcClaus/ApplicationDataTypes/Type_Bernd</
                APPLICATION-DATA-TYPE-REF>
            <IMPLEMENTATION-DATA-TYPE-REF DEST="
                IMPLEMENTATION-DATA-TYPE">/AUTOSAR/CONC_670/
                SwcClaus/ImplementationDataTypes/Type_Bernd</
                IMPLEMENTATION-DATA-TYPE-REF>
          </DATA-TYPE-MAP>
          <DATA-TYPE-MAP>
```

```
            <APPLICATION-DATA-TYPE-REF DEST="APPLICATION-
                PRIMITIVE-DATA-TYPE">/AUTOSAR/CONC_670/
                SwcClaus/ApplicationDataTypes/Type_Celine</
                APPLICATION-DATA-TYPE-REF>
            <IMPLEMENTATION-DATA-TYPE-REF DEST="
                IMPLEMENTATION-DATA-TYPE">/AUTOSAR/CONC_670/
                SwcClaus/ImplementationDataTypes/Type_Celine</
                IMPLEMENTATION-DATA-TYPE-REF>
          </DATA-TYPE-MAP>
        </DATA-TYPE-MAPS>
      </DATA-TYPE-MAPPING-SET>
    </ELEMENTS>
  </AR-PACKAGE>
  <AR-PACKAGE>
    <SHORT-NAME>ImplementationDataTypes</SHORT-NAME>
    <ELEMENTS>
      <IMPLEMENTATION-DATA-TYPE>
        <SHORT-NAME>Type_Claus</SHORT-NAME>
        <CATEGORY>TYPE_REFERENCE</CATEGORY>
        <SW-DATA-DEF-PROPS>
          <SW-DATA-DEF-PROPS-VARIANTS>
            <SW-DATA-DEF-PROPS-CONDITIONAL>
              <IMPLEMENTATION-DATA-TYPE-REF DEST="
                  IMPLEMENTATION-DATA-TYPE">/AUTOSAR_Platform/
                  ImplementationDataTypes/uint16</
                  IMPLEMENTATION-DATA-TYPE-REF>
            </SW-DATA-DEF-PROPS-CONDITIONAL>
          </SW-DATA-DEF-PROPS-VARIANTS>
        </SW-DATA-DEF-PROPS>
      </IMPLEMENTATION-DATA-TYPE>
      <IMPLEMENTATION-DATA-TYPE>
        <SHORT-NAME>Type_Hugo</SHORT-NAME>
        <CATEGORY>TYPE_REFERENCE</CATEGORY>
        <SW-DATA-DEF-PROPS>
          <SW-DATA-DEF-PROPS-VARIANTS>
            <SW-DATA-DEF-PROPS-CONDITIONAL>
              <IMPLEMENTATION-DATA-TYPE-REF DEST="
                  IMPLEMENTATION-DATA-TYPE">/AUTOSAR_Platform/
                  ImplementationDataTypes/uint32</
                  IMPLEMENTATION-DATA-TYPE-REF>
            </SW-DATA-DEF-PROPS-CONDITIONAL>
          </SW-DATA-DEF-PROPS-VARIANTS>
        </SW-DATA-DEF-PROPS>
      </IMPLEMENTATION-DATA-TYPE>
      <IMPLEMENTATION-DATA-TYPE>
        <SHORT-NAME>Type_Bernd</SHORT-NAME>
        <CATEGORY>TYPE_REFERENCE</CATEGORY>
        <SW-DATA-DEF-PROPS>
          <SW-DATA-DEF-PROPS-VARIANTS>
            <SW-DATA-DEF-PROPS-CONDITIONAL>
              <IMPLEMENTATION-DATA-TYPE-REF DEST="
                  IMPLEMENTATION-DATA-TYPE">/AUTOSAR_Platform/
                  ImplementationDataTypes/uint8</
                  IMPLEMENTATION-DATA-TYPE-REF>
            </SW-DATA-DEF-PROPS-CONDITIONAL>
          </SW-DATA-DEF-PROPS-VARIANTS>
```

```
        </SW-DATA-DEF-PROPS>
      </IMPLEMENTATION-DATA-TYPE>
      <IMPLEMENTATION-DATA-TYPE>
        <SHORT-NAME>Type_Celine</SHORT-NAME>
        <CATEGORY>TYPE_REFERENCE</CATEGORY>
        <SW-DATA-DEF-PROPS>
          <SW-DATA-DEF-PROPS-VARIANTS>
            <SW-DATA-DEF-PROPS-CONDITIONAL>
              <IMPLEMENTATION-DATA-TYPE-REF DEST="
                  IMPLEMENTATION-DATA-TYPE">/AUTOSAR_Platform/
                  ImplementationDataTypes/sint16</
                  IMPLEMENTATION-DATA-TYPE-REF>
            </SW-DATA-DEF-PROPS-CONDITIONAL>
          </SW-DATA-DEF-PROPS-VARIANTS>
        </SW-DATA-DEF-PROPS>
      </IMPLEMENTATION-DATA-TYPE>
    </ELEMENTS>
  </AR-PACKAGE>
  <AR-PACKAGE>
    <SHORT-NAME>PortInterfaces</SHORT-NAME>
    <ELEMENTS>
      <SENDER-RECEIVER-INTERFACE>
        <SHORT-NAME>IF_Claus</SHORT-NAME>
        <IS-SERVICE>false</IS-SERVICE>
        <SERVICE-KIND>VENDOR-SPECIFIC</SERVICE-KIND>
        <DATA-ELEMENTS>
          <VARIABLE-DATA-PROTOTYPE>
            <SHORT-NAME>Claus</SHORT-NAME>
            <CATEGORY>VALUE</CATEGORY>
            <SW-DATA-DEF-PROPS>
              <SW-DATA-DEF-PROPS-VARIANTS>
                <SW-DATA-DEF-PROPS-CONDITIONAL>
                  <SW-CALIBRATION-ACCESS>READ-ONLY</SW-
                      CALIBRATION-ACCESS>
                </SW-DATA-DEF-PROPS-CONDITIONAL>
              </SW-DATA-DEF-PROPS-VARIANTS>
            </SW-DATA-DEF-PROPS>
            <TYPE-TREF DEST="APPLICATION-PRIMITIVE-DATA-TYPE"
                >/AUTOSAR/CONC_670/SwcClaus/
                ApplicationDataTypes/Type_Claus</TYPE-TREF>
          </VARIABLE-DATA-PROTOTYPE>
        </DATA-ELEMENTS>
      </SENDER-RECEIVER-INTERFACE>
      <SENDER-RECEIVER-INTERFACE>
        <SHORT-NAME>IF_Hugo</SHORT-NAME>
        <IS-SERVICE>false</IS-SERVICE>
        <SERVICE-KIND>VENDOR-SPECIFIC</SERVICE-KIND>
        <DATA-ELEMENTS>
          <VARIABLE-DATA-PROTOTYPE>
            <SHORT-NAME>Claus</SHORT-NAME>
            <CATEGORY>VALUE</CATEGORY>
            <SW-DATA-DEF-PROPS>
              <SW-DATA-DEF-PROPS-VARIANTS>
                <SW-DATA-DEF-PROPS-CONDITIONAL>
                  <SW-CALIBRATION-ACCESS>READ-ONLY</SW-
                      CALIBRATION-ACCESS>
```

```
            </SW-DATA-DEF-PROPS-CONDITIONAL>
          </SW-DATA-DEF-PROPS-VARIANTS>
        </SW-DATA-DEF-PROPS>
        <TYPE-TREF DEST="APPLICATION-PRIMITIVE-DATA-TYPE"
          >/AUTOSAR/CONC_670/SwcClaus/
          ApplicationDataTypes/Type_Hugo</TYPE-TREF>
      </VARIABLE-DATA-PROTOTYPE>
    </DATA-ELEMENTS>
  </SENDER-RECEIVER-INTERFACE>
  <SENDER-RECEIVER-INTERFACE>
    <SHORT-NAME>IF_Bernd</SHORT-NAME>
    <IS-SERVICE>false</IS-SERVICE>
    <SERVICE-KIND>VENDOR-SPECIFIC</SERVICE-KIND>
    <DATA-ELEMENTS>
      <VARIABLE-DATA-PROTOTYPE>
        <SHORT-NAME>Bernd</SHORT-NAME>
        <CATEGORY>VALUE</CATEGORY>
        <SW-DATA-DEF-PROPS>
          <SW-DATA-DEF-PROPS-VARIANTS>
            <SW-DATA-DEF-PROPS-CONDITIONAL>
              <SW-CALIBRATION-ACCESS>READ-ONLY</SW-
                CALIBRATION-ACCESS>
            </SW-DATA-DEF-PROPS-CONDITIONAL>
          </SW-DATA-DEF-PROPS-VARIANTS>
        </SW-DATA-DEF-PROPS>
        <TYPE-TREF DEST="APPLICATION-PRIMITIVE-DATA-TYPE"
          >/AUTOSAR/CONC_670/SwcClaus/
          ApplicationDataTypes/Type_Bernd</TYPE-TREF>
      </VARIABLE-DATA-PROTOTYPE>
    </DATA-ELEMENTS>
  </SENDER-RECEIVER-INTERFACE>
  <SENDER-RECEIVER-INTERFACE>
    <SHORT-NAME>IF_Celine</SHORT-NAME>
    <IS-SERVICE>false</IS-SERVICE>
    <SERVICE-KIND>VENDOR-SPECIFIC</SERVICE-KIND>
    <DATA-ELEMENTS>
      <VARIABLE-DATA-PROTOTYPE>
        <SHORT-NAME>Celine</SHORT-NAME>
        <CATEGORY>VALUE</CATEGORY>
        <SW-DATA-DEF-PROPS>
          <SW-DATA-DEF-PROPS-VARIANTS>
            <SW-DATA-DEF-PROPS-CONDITIONAL>
              <SW-CALIBRATION-ACCESS>READ-ONLY</SW-
                CALIBRATION-ACCESS>
            </SW-DATA-DEF-PROPS-CONDITIONAL>
          </SW-DATA-DEF-PROPS-VARIANTS>
        </SW-DATA-DEF-PROPS>
        <TYPE-TREF DEST="APPLICATION-PRIMITIVE-DATA-TYPE"
          >/AUTOSAR/CONC_670/SwcClaus/
          ApplicationDataTypes/Type_Celine</TYPE-TREF>
      </VARIABLE-DATA-PROTOTYPE>
    </DATA-ELEMENTS>
  </SENDER-RECEIVER-INTERFACE>
  <CLIENT-SERVER-INTERFACE>
    <SHORT-NAME>IF_OpClaus</SHORT-NAME>
    <IS-SERVICE>false</IS-SERVICE>
```

```
                    <OPERATIONS>
                      <CLIENT-SERVER-OPERATION>
                        <SHORT-NAME>OpClaus</SHORT-NAME>
                        <ARGUMENTS>
                          <ARGUMENT-DATA-PROTOTYPE>
                            <SHORT-NAME>ArgIn_8</SHORT-NAME>
                            <TYPE-TREF DEST="IMPLEMENTATION-DATA-TYPE">/
                               AUTOSAR_Platform/ImplementationDataTypes/
                               uint8</TYPE-TREF>
                            <DIRECTION>IN</DIRECTION>
                          </ARGUMENT-DATA-PROTOTYPE>
                          <ARGUMENT-DATA-PROTOTYPE>
                            <SHORT-NAME>ArgIn_16</SHORT-NAME>
                            <TYPE-TREF DEST="IMPLEMENTATION-DATA-TYPE">/
                               AUTOSAR_Platform/ImplementationDataTypes/
                               uint16</TYPE-TREF>
                            <DIRECTION>IN</DIRECTION>
                          </ARGUMENT-DATA-PROTOTYPE>
                          <ARGUMENT-DATA-PROTOTYPE>
                            <SHORT-NAME>ArgOut_16</SHORT-NAME>
                            <TYPE-TREF DEST="IMPLEMENTATION-DATA-TYPE">/
                               AUTOSAR_Platform/ImplementationDataTypes/
                               uint16</TYPE-TREF>
                            <DIRECTION>OUT</DIRECTION>
                          </ARGUMENT-DATA-PROTOTYPE>
                        </ARGUMENTS>
                      </CLIENT-SERVER-OPERATION>
                    </OPERATIONS>
                  </CLIENT-SERVER-INTERFACE>
                </ELEMENTS>
              </AR-PACKAGE>
            </AR-PACKAGES>
          </AR-PACKAGE>
        </AR-PACKAGES>
      </AR-PACKAGE>
    </AR-PACKAGES>
  </AR-PACKAGE>
</AR-PACKAGES>
</AUTOSAR>
```

Listing A.5: DOC_SwCluC_SwcClaus_SWCD.arxml

A.2 System Description

A.2.1 DOC_SwCluC_SwcCompoAHB_SWCD.arxml

```
<AUTOSAR xmlns="http://autosar.org/schema/r4.0" xmlns:xsi="http://www.w3.
    org/2001/XMLSchema-instance" xsi:schemaLocation="http://autosar.org/
    schema/r4.0 AUTOSAR_00055.xsd">
  <AR-PACKAGES>
    <AR-PACKAGE>
      <SHORT-NAME>AUTOSAR</SHORT-NAME>
```

```
<AR-PACKAGES>
  <AR-PACKAGE>
    <SHORT-NAME>CONC_670</SHORT-NAME>
    <AR-PACKAGES>
      <AR-PACKAGE>
        <SHORT-NAME>SwcCompoAHB</SHORT-NAME>
        <AR-PACKAGES>
          <AR-PACKAGE>
            <SHORT-NAME>SwComponentTypes</SHORT-NAME>
            <ELEMENTS>
              <COMPOSITION-SW-COMPONENT-TYPE>
                <SHORT-NAME>SwcCompoAHB</SHORT-NAME>
                <PORTS>
                  <R-PORT-PROTOTYPE>
                    <SHORT-NAME>RP_Celine</SHORT-NAME>
                    <REQUIRED-COM-SPECS>
                      <NONQUEUED-RECEIVER-COM-SPEC>
                        <DATA-ELEMENT-REF DEST="VARIABLE-DATA-
                            PROTOTYPE">/AUTOSAR/CONC_670/SwcCompoAHB/
                            PortInterfaces/IF_Celine/Celine</DATA-
                            ELEMENT-REF>
                        <HANDLE-OUT-OF-RANGE>NONE</HANDLE-OUT-OF-
                            RANGE>
                        <ALIVE-TIMEOUT>0.0</ALIVE-TIMEOUT>
                        <HANDLE-DATA-STATUS>false</HANDLE-DATA-STATUS
                            >
                        <HANDLE-NEVER-RECEIVED>false</HANDLE-NEVER-
                            RECEIVED>
                        <HANDLE-TIMEOUT-TYPE>NONE</HANDLE-TIMEOUT-
                            TYPE>
                        <INIT-VALUE>
                          <APPLICATION-VALUE-SPECIFICATION>
                            <CATEGORY>VALUE</CATEGORY>
                            <SW-VALUE-CONT>
                              <UNIT-REF DEST="UNIT">/AUTOSAR/CONC_670
                                  /SwcCompoAHB/Units/No_Unit</UNIT-REF
                                  >
                              <SW-VALUES-PHYS>
                                <V>42</V>
                              </SW-VALUES-PHYS>
                            </SW-VALUE-CONT>
                          </APPLICATION-VALUE-SPECIFICATION>
                        </INIT-VALUE>
                      </NONQUEUED-RECEIVER-COM-SPEC>
                    </REQUIRED-COM-SPECS>
                    <REQUIRED-INTERFACE-TREF DEST="SENDER-RECEIVER-
                        INTERFACE">/AUTOSAR/CONC_670/SwcCompoAHB/
                        PortInterfaces/IF_Celine</REQUIRED-INTERFACE-
                        TREF>
                  </R-PORT-PROTOTYPE>
                  <P-PORT-PROTOTYPE>
                    <SHORT-NAME>PP_Bernd</SHORT-NAME>
                    <PROVIDED-COM-SPECS>
                      <NONQUEUED-SENDER-COM-SPEC>
```

```
            <DATA-ELEMENT-REF DEST="VARIABLE-DATA-
                PROTOTYPE">/AUTOSAR/CONC_670/SwcCompoAHB/
                PortInterfaces/IF_Bernd/Bernd</DATA-
                ELEMENT-REF>
            <HANDLE-OUT-OF-RANGE>NONE</HANDLE-OUT-OF-
                RANGE>
            <INIT-VALUE>
              <APPLICATION-VALUE-SPECIFICATION>
                <SW-VALUE-CONT>
                  <UNIT-REF DEST="UNIT">/AUTOSAR/CONC_670
                      /SwcCompoAHB/Units/No_Unit</UNIT-REF
                      >
                  <SW-VALUES-PHYS>
                    <V>123</V>
                  </SW-VALUES-PHYS>
                </SW-VALUE-CONT>
              </APPLICATION-VALUE-SPECIFICATION>
            </INIT-VALUE>
          </NONQUEUED-SENDER-COM-SPEC>
        </PROVIDED-COM-SPECS>
        <PROVIDED-INTERFACE-TREF DEST="SENDER-RECEIVER-
            INTERFACE">/AUTOSAR/CONC_670/SwcCompoAHB/
            PortInterfaces/IF_Bernd</PROVIDED-INTERFACE-
            TREF>
      </P-PORT-PROTOTYPE>
      <P-PORT-PROTOTYPE>
        <SHORT-NAME>PP_Anton</SHORT-NAME>
        <PROVIDED-COM-SPECS>
          <NONQUEUED-SENDER-COM-SPEC>
            <DATA-ELEMENT-REF DEST="VARIABLE-DATA-
                PROTOTYPE">/AUTOSAR/CONC_670/SwcCompoAHB/
                PortInterfaces/IF_Bernd/Bernd</DATA-
                ELEMENT-REF>
            <HANDLE-OUT-OF-RANGE>NONE</HANDLE-OUT-OF-
                RANGE>
            <INIT-VALUE>
              <APPLICATION-VALUE-SPECIFICATION>
                <SW-VALUE-CONT>
                  <UNIT-REF DEST="UNIT">/AUTOSAR/CONC_670
                      /SwcCompoAHB/Units/No_Unit</UNIT-REF
                      >
                  <SW-VALUES-PHYS>
                    <V>456</V>
                  </SW-VALUES-PHYS>
                </SW-VALUE-CONT>
              </APPLICATION-VALUE-SPECIFICATION>
            </INIT-VALUE>
          </NONQUEUED-SENDER-COM-SPEC>
        </PROVIDED-COM-SPECS>
        <PROVIDED-INTERFACE-TREF DEST="SENDER-RECEIVER-
            INTERFACE">/AUTOSAR/CONC_670/SwcCompoAHB/
            PortInterfaces/IF_Anton</PROVIDED-INTERFACE-
            TREF>
      </P-PORT-PROTOTYPE>
    </PORTS>
    <COMPONENTS>
```

```
    <SW-COMPONENT-PROTOTYPE>
      <SHORT-NAME>CPT_SwcAnton</SHORT-NAME>
      <TYPE-TREF DEST="APPLICATION-SW-COMPONENT-TYPE">/
          AUTOSAR/CONC_670/SwcAnton/SwComponentTypes/
          SwcAnton</TYPE-TREF>
    </SW-COMPONENT-PROTOTYPE>
    <SW-COMPONENT-PROTOTYPE>
      <SHORT-NAME>CPT_SwcBernd</SHORT-NAME>
      <TYPE-TREF DEST="APPLICATION-SW-COMPONENT-TYPE">/
          AUTOSAR/CONC_670/SwcBernd/SwComponentTypes/
          SwcBernd</TYPE-TREF>
    </SW-COMPONENT-PROTOTYPE>
    <SW-COMPONENT-PROTOTYPE>
      <SHORT-NAME>CPT_SwcHugo</SHORT-NAME>
      <TYPE-TREF DEST="APPLICATION-SW-COMPONENT-TYPE">/
          AUTOSAR/CONC_670/SwcHugo/SwComponentTypes/
          SwcHugo</TYPE-TREF>
    </SW-COMPONENT-PROTOTYPE>
  </COMPONENTS>
  <CONNECTORS>
    <ASSEMBLY-SW-CONNECTOR>
      <SHORT-NAME>
          ASC_CPT_SwcAnton_PP_Anton_CPT_SwcHugo_RP_Anton
          </SHORT-NAME>
      <PROVIDER-IREF>
        <CONTEXT-COMPONENT-REF DEST="SW-COMPONENT-
            PROTOTYPE">/AUTOSAR/CONC_670/SwcCompoAHB/
            SwComponentTypes/SwcCompoAHB/CPT_SwcAnton</
            CONTEXT-COMPONENT-REF>
        <TARGET-P-PORT-REF DEST="P-PORT-PROTOTYPE">/
            AUTOSAR/CONC_670/SwcAnton/SwComponentTypes/
            SwcAnton/PP_Anton</TARGET-P-PORT-REF>
      </PROVIDER-IREF>
      <REQUESTER-IREF>
        <CONTEXT-COMPONENT-REF DEST="SW-COMPONENT-
            PROTOTYPE">/AUTOSAR/CONC_670/SwcCompoAHB/
            SwComponentTypes/SwcCompoAHB/CPT_SwcHugo</
            CONTEXT-COMPONENT-REF>
        <TARGET-R-PORT-REF DEST="R-PORT-PROTOTYPE">/
            AUTOSAR/CONC_670/SwcHugo/SwComponentTypes/
            SwcHugo/RP_Anton</TARGET-R-PORT-REF>
      </REQUESTER-IREF>
    </ASSEMBLY-SW-CONNECTOR>
    <ASSEMBLY-SW-CONNECTOR>
      <SHORT-NAME>
          ASC_CPT_SwcAnton_PP_Anton_CPT_SwcBernd_RP_Anton
          </SHORT-NAME>
      <PROVIDER-IREF>
        <CONTEXT-COMPONENT-REF DEST="SW-COMPONENT-
            PROTOTYPE">/AUTOSAR/CONC_670/SwcCompoAHB/
            SwComponentTypes/SwcCompoAHB/CPT_SwcAnton</
            CONTEXT-COMPONENT-REF>
        <TARGET-P-PORT-REF DEST="P-PORT-PROTOTYPE">/
            AUTOSAR/CONC_670/SwcAnton/SwComponentTypes/
            SwcAnton/PP_Anton</TARGET-P-PORT-REF>
      </PROVIDER-IREF>
```

```
      <REQUESTER-IREF>
        <CONTEXT-COMPONENT-REF DEST="SW-COMPONENT-
            PROTOTYPE">/AUTOSAR/CONC_670/SwcCompoAHB/
            SwComponentTypes/SwcCompoAHB/CPT_SwcBernd</
            CONTEXT-COMPONENT-REF>
        <TARGET-R-PORT-REF DEST="R-PORT-PROTOTYPE">/
            AUTOSAR/CONC_670/SwcBernd/SwComponentTypes/
            SwcBernd/RP_Anton</TARGET-R-PORT-REF>
      </REQUESTER-IREF>
    </ASSEMBLY-SW-CONNECTOR>
    <DELEGATION-SW-CONNECTOR>
      <SHORT-NAME>DSC_RP_Celine_CPT_SwcBernd_RP_Celine<
          /SHORT-NAME>
      <INNER-PORT-IREF>
        <R-PORT-IN-COMPOSITION-INSTANCE-REF>
          <CONTEXT-COMPONENT-REF DEST="SW-COMPONENT-
              PROTOTYPE">/AUTOSAR/CONC_670/SwcCompoAHB/
              SwComponentTypes/SwcCompoAHB/CPT_SwcBernd<
              /CONTEXT-COMPONENT-REF>
          <TARGET-R-PORT-REF DEST="R-PORT-PROTOTYPE">/
              AUTOSAR/CONC_670/SwcBernd/SwComponentTypes
              /SwcBernd/RP_Celine</TARGET-R-PORT-REF>
        </R-PORT-IN-COMPOSITION-INSTANCE-REF>
      </INNER-PORT-IREF>
      <OUTER-PORT-REF DEST="R-PORT-PROTOTYPE">/AUTOSAR/
          CONC_670/SwcCompoAHB/SwComponentTypes/
          SwcCompoAHB/RP_Celine</OUTER-PORT-REF>
    </DELEGATION-SW-CONNECTOR>
    <DELEGATION-SW-CONNECTOR>
      <SHORT-NAME>DSC_PP_Bernd_CPT_SwcBernd_PP_Bernd</
          SHORT-NAME>
      <INNER-PORT-IREF>
        <P-PORT-IN-COMPOSITION-INSTANCE-REF>
          <CONTEXT-COMPONENT-REF DEST="SW-COMPONENT-
              PROTOTYPE">/AUTOSAR/CONC_670/SwcCompoAHB/
              SwComponentTypes/SwcCompoAHB/CPT_SwcBernd<
              /CONTEXT-COMPONENT-REF>
          <TARGET-P-PORT-REF DEST="P-PORT-PROTOTYPE">/
              AUTOSAR/CONC_670/SwcBernd/SwComponentTypes
              /SwcBernd/PP_Bernd</TARGET-P-PORT-REF>
        </P-PORT-IN-COMPOSITION-INSTANCE-REF>
      </INNER-PORT-IREF>
      <OUTER-PORT-REF DEST="P-PORT-PROTOTYPE">/AUTOSAR/
          CONC_670/SwcCompoAHB/SwComponentTypes/
          SwcCompoAHB/PP_Bernd</OUTER-PORT-REF>
    </DELEGATION-SW-CONNECTOR>
    <DELEGATION-SW-CONNECTOR>
      <SHORT-NAME>DSC_PP_Anton_CPT_SwcAnton_PP_Antone</
          SHORT-NAME>
      <INNER-PORT-IREF>
        <P-PORT-IN-COMPOSITION-INSTANCE-REF>
          <CONTEXT-COMPONENT-REF DEST="SW-COMPONENT-
              PROTOTYPE">/AUTOSAR/CONC_670/SwcCompoAHB/
              SwComponentTypes/SwcCompoAHB/CPT_SwcAnton<
              /CONTEXT-COMPONENT-REF>
```

```
                    <TARGET-P-PORT-REF DEST="P-PORT-PROTOTYPE">/
                        AUTOSAR/CONC_670/SwcAnton/SwComponentTypes
                        /SwcAnton/PP_Anton</TARGET-P-PORT-REF>
                  </P-PORT-IN-COMPOSITION-INSTANCE-REF>
                </INNER-PORT-IREF>
                <OUTER-PORT-REF DEST="P-PORT-PROTOTYPE">/AUTOSAR/
                    CONC_670/SwcCompoAHB/SwComponentTypes/
                    SwcCompoAHB/PP_Anton</OUTER-PORT-REF>
              </DELEGATION-SW-CONNECTOR>
            </CONNECTORS>
            <DATA-TYPE-MAPPING-REFS>
              <DATA-TYPE-MAPPING-REF DEST="DATA-TYPE-MAPPING-SET"
                  >/AUTOSAR/CONC_670/SwcCompoAHB/
                  DataTypeMappingSets/DTMS_SwcCompoAHB</DATA-TYPE-
                  MAPPING-REF>
            </DATA-TYPE-MAPPING-REFS>
          </COMPOSITION-SW-COMPONENT-TYPE>
        </ELEMENTS>
      </AR-PACKAGE>
      <AR-PACKAGE>
        <SHORT-NAME>ApplicationDataTypes</SHORT-NAME>
        <ELEMENTS>
          <APPLICATION-PRIMITIVE-DATA-TYPE>
            <SHORT-NAME>Type_Anton</SHORT-NAME>
            <CATEGORY>VALUE</CATEGORY>
            <SW-DATA-DEF-PROPS>
              <SW-DATA-DEF-PROPS-VARIANTS>
                <SW-DATA-DEF-PROPS-CONDITIONAL>
                  <SW-CALIBRATION-ACCESS>READ-ONLY</SW-
                      CALIBRATION-ACCESS>
                  <COMPU-METHOD-REF DEST="COMPU-METHOD">/AUTOSAR/
                      CONC_670/SwcCompoAHB/CompuMethods/Identical<
                      /COMPU-METHOD-REF>
                  <SW-IMPL-POLICY>STANDARD</SW-IMPL-POLICY>
                </SW-DATA-DEF-PROPS-CONDITIONAL>
              </SW-DATA-DEF-PROPS-VARIANTS>
            </SW-DATA-DEF-PROPS>
          </APPLICATION-PRIMITIVE-DATA-TYPE>
          <APPLICATION-PRIMITIVE-DATA-TYPE>
            <SHORT-NAME>Type_Hugo</SHORT-NAME>
            <CATEGORY>VALUE</CATEGORY>
            <SW-DATA-DEF-PROPS>
              <SW-DATA-DEF-PROPS-VARIANTS>
                <SW-DATA-DEF-PROPS-CONDITIONAL>
                  <SW-CALIBRATION-ACCESS>READ-ONLY</SW-
                      CALIBRATION-ACCESS>
                  <COMPU-METHOD-REF DEST="COMPU-METHOD">/AUTOSAR/
                      CONC_670/SwcCompoAHB/CompuMethods/Identical<
                      /COMPU-METHOD-REF>
                  <SW-IMPL-POLICY>STANDARD</SW-IMPL-POLICY>
                </SW-DATA-DEF-PROPS-CONDITIONAL>
              </SW-DATA-DEF-PROPS-VARIANTS>
            </SW-DATA-DEF-PROPS>
          </APPLICATION-PRIMITIVE-DATA-TYPE>
          <APPLICATION-PRIMITIVE-DATA-TYPE>
            <SHORT-NAME>Type_Bernd</SHORT-NAME>
```

```
        <CATEGORY>VALUE</CATEGORY>
        <SW-DATA-DEF-PROPS>
          <SW-DATA-DEF-PROPS-VARIANTS>
            <SW-DATA-DEF-PROPS-CONDITIONAL>
              <SW-CALIBRATION-ACCESS>READ-ONLY</SW-
                 CALIBRATION-ACCESS>
              <COMPU-METHOD-REF DEST="COMPU-METHOD">/AUTOSAR/
                 CONC_670/SwcCompoAHB/CompuMethods/Identical<
                 /COMPU-METHOD-REF>
              <SW-IMPL-POLICY>STANDARD</SW-IMPL-POLICY>
            </SW-DATA-DEF-PROPS-CONDITIONAL>
          </SW-DATA-DEF-PROPS-VARIANTS>
        </SW-DATA-DEF-PROPS>
      </APPLICATION-PRIMITIVE-DATA-TYPE>
      <APPLICATION-PRIMITIVE-DATA-TYPE>
        <SHORT-NAME>Type_Celine</SHORT-NAME>
        <CATEGORY>VALUE</CATEGORY>
        <SW-DATA-DEF-PROPS>
          <SW-DATA-DEF-PROPS-VARIANTS>
            <SW-DATA-DEF-PROPS-CONDITIONAL>
              <SW-CALIBRATION-ACCESS>READ-ONLY</SW-
                 CALIBRATION-ACCESS>
              <COMPU-METHOD-REF DEST="COMPU-METHOD">/AUTOSAR/
                 CONC_670/SwcCompoAHB/CompuMethods/Identical<
                 /COMPU-METHOD-REF>
              <SW-IMPL-POLICY>STANDARD</SW-IMPL-POLICY>
            </SW-DATA-DEF-PROPS-CONDITIONAL>
          </SW-DATA-DEF-PROPS-VARIANTS>
        </SW-DATA-DEF-PROPS>
      </APPLICATION-PRIMITIVE-DATA-TYPE>
    </ELEMENTS>
  </AR-PACKAGE>
  <AR-PACKAGE>
    <SHORT-NAME>CompuMethods</SHORT-NAME>
    <ELEMENTS>
      <COMPU-METHOD>
        <SHORT-NAME>Identical</SHORT-NAME>
        <CATEGORY>IDENTICAL</CATEGORY>
        <UNIT-REF DEST="UNIT">/AUTOSAR/CONC_670/SwcCompoAHB/
           Units/No_Unit</UNIT-REF>
      </COMPU-METHOD>
    </ELEMENTS>
  </AR-PACKAGE>
  <AR-PACKAGE>
    <SHORT-NAME>DataTypeMappingSets</SHORT-NAME>
    <ELEMENTS>
      <DATA-TYPE-MAPPING-SET>
        <SHORT-NAME>DTMS_SwcCompoAHB</SHORT-NAME>
        <DATA-TYPE-MAPS>
          <DATA-TYPE-MAP>
            <APPLICATION-DATA-TYPE-REF DEST="APPLICATION-
               PRIMITIVE-DATA-TYPE">/AUTOSAR/CONC_670/
               SwcCompoAHB/ApplicationDataTypes/Type_Hugo</
               APPLICATION-DATA-TYPE-REF>
```

```
            <IMPLEMENTATION-DATA-TYPE-REF DEST="
                IMPLEMENTATION-DATA-TYPE">/AUTOSAR/CONC_670/
                SwcCompoAHB/ImplementationDataTypes/Type_Hugo<
                /IMPLEMENTATION-DATA-TYPE-REF>
          </DATA-TYPE-MAP>
          <DATA-TYPE-MAP>
            <APPLICATION-DATA-TYPE-REF DEST="APPLICATION-
                PRIMITIVE-DATA-TYPE">/AUTOSAR/CONC_670/
                SwcCompoAHB/ApplicationDataTypes/Type_Bernd</
                APPLICATION-DATA-TYPE-REF>
            <IMPLEMENTATION-DATA-TYPE-REF DEST="
                IMPLEMENTATION-DATA-TYPE">/AUTOSAR/CONC_670/
                SwcCompoAHB/ImplementationDataTypes/Type_Bernd
                </IMPLEMENTATION-DATA-TYPE-REF>
          </DATA-TYPE-MAP>
          <DATA-TYPE-MAP>
            <APPLICATION-DATA-TYPE-REF DEST="APPLICATION-
                PRIMITIVE-DATA-TYPE">/AUTOSAR/CONC_670/
                SwcCompoAHB/ApplicationDataTypes/Type_Celine</
                APPLICATION-DATA-TYPE-REF>
            <IMPLEMENTATION-DATA-TYPE-REF DEST="
                IMPLEMENTATION-DATA-TYPE">/AUTOSAR/CONC_670/
                SwcCompoAHB/ImplementationDataTypes/
                Type_Celine</IMPLEMENTATION-DATA-TYPE-REF>
          </DATA-TYPE-MAP>
          <DATA-TYPE-MAP>
            <APPLICATION-DATA-TYPE-REF DEST="APPLICATION-
                PRIMITIVE-DATA-TYPE">/AUTOSAR/CONC_670/
                SwcCompoAHB/ApplicationDataTypes/Type_Anton</
                APPLICATION-DATA-TYPE-REF>
            <IMPLEMENTATION-DATA-TYPE-REF DEST="
                IMPLEMENTATION-DATA-TYPE">/AUTOSAR/CONC_670/
                SwcCompoAHB/ImplementationDataTypes/Type_Anton
                </IMPLEMENTATION-DATA-TYPE-REF>
          </DATA-TYPE-MAP>
        </DATA-TYPE-MAPS>
      </DATA-TYPE-MAPPING-SET>
    </ELEMENTS>
  </AR-PACKAGE>
  <AR-PACKAGE>
    <SHORT-NAME>ImplementationDataTypes</SHORT-NAME>
    <ELEMENTS>
      <IMPLEMENTATION-DATA-TYPE>
        <SHORT-NAME>Type_Anton</SHORT-NAME>
        <CATEGORY>TYPE_REFERENCE</CATEGORY>
        <SW-DATA-DEF-PROPS>
          <SW-DATA-DEF-PROPS-VARIANTS>
            <SW-DATA-DEF-PROPS-CONDITIONAL>
              <IMPLEMENTATION-DATA-TYPE-REF DEST="
                  IMPLEMENTATION-DATA-TYPE">/AUTOSAR_Platform/
                  ImplementationDataTypes/uint16</
                  IMPLEMENTATION-DATA-TYPE-REF>
            </SW-DATA-DEF-PROPS-CONDITIONAL>
          </SW-DATA-DEF-PROPS-VARIANTS>
        </SW-DATA-DEF-PROPS>
      </IMPLEMENTATION-DATA-TYPE>
```

```
      <IMPLEMENTATION-DATA-TYPE>
        <SHORT-NAME>Type_Hugo</SHORT-NAME>
        <CATEGORY>TYPE_REFERENCE</CATEGORY>
        <SW-DATA-DEF-PROPS>
          <SW-DATA-DEF-PROPS-VARIANTS>
            <SW-DATA-DEF-PROPS-CONDITIONAL>
              <IMPLEMENTATION-DATA-TYPE-REF DEST="
                  IMPLEMENTATION-DATA-TYPE">/AUTOSAR_Platform/
                  ImplementationDataTypes/uint32</
                  IMPLEMENTATION-DATA-TYPE-REF>
            </SW-DATA-DEF-PROPS-CONDITIONAL>
          </SW-DATA-DEF-PROPS-VARIANTS>
        </SW-DATA-DEF-PROPS>
      </IMPLEMENTATION-DATA-TYPE>
      <IMPLEMENTATION-DATA-TYPE>
        <SHORT-NAME>Type_Bernd</SHORT-NAME>
        <CATEGORY>TYPE_REFERENCE</CATEGORY>
        <SW-DATA-DEF-PROPS>
          <SW-DATA-DEF-PROPS-VARIANTS>
            <SW-DATA-DEF-PROPS-CONDITIONAL>
              <IMPLEMENTATION-DATA-TYPE-REF DEST="
                  IMPLEMENTATION-DATA-TYPE">/AUTOSAR_Platform/
                  ImplementationDataTypes/uint8</
                  IMPLEMENTATION-DATA-TYPE-REF>
            </SW-DATA-DEF-PROPS-CONDITIONAL>
          </SW-DATA-DEF-PROPS-VARIANTS>
        </SW-DATA-DEF-PROPS>
      </IMPLEMENTATION-DATA-TYPE>
      <IMPLEMENTATION-DATA-TYPE>
        <SHORT-NAME>Type_Celine</SHORT-NAME>
        <CATEGORY>TYPE_REFERENCE</CATEGORY>
        <SW-DATA-DEF-PROPS>
          <SW-DATA-DEF-PROPS-VARIANTS>
            <SW-DATA-DEF-PROPS-CONDITIONAL>
              <IMPLEMENTATION-DATA-TYPE-REF DEST="
                  IMPLEMENTATION-DATA-TYPE">/AUTOSAR_Platform/
                  ImplementationDataTypes/sint16</
                  IMPLEMENTATION-DATA-TYPE-REF>
            </SW-DATA-DEF-PROPS-CONDITIONAL>
          </SW-DATA-DEF-PROPS-VARIANTS>
        </SW-DATA-DEF-PROPS>
      </IMPLEMENTATION-DATA-TYPE>
    </ELEMENTS>
  </AR-PACKAGE>
  <AR-PACKAGE>
    <SHORT-NAME>PortInterfaces</SHORT-NAME>
    <ELEMENTS>
      <SENDER-RECEIVER-INTERFACE>
        <SHORT-NAME>IF_Hugo</SHORT-NAME>
        <IS-SERVICE>false</IS-SERVICE>
        <SERVICE-KIND>VENDOR-SPECIFIC</SERVICE-KIND>
        <DATA-ELEMENTS>
          <VARIABLE-DATA-PROTOTYPE>
            <SHORT-NAME>Claus</SHORT-NAME>
            <CATEGORY>VALUE</CATEGORY>
            <SW-DATA-DEF-PROPS>
```

```
            <SW-DATA-DEF-PROPS-VARIANTS>
              <SW-DATA-DEF-PROPS-CONDITIONAL>
                <SW-CALIBRATION-ACCESS>READ-ONLY</SW-
                    CALIBRATION-ACCESS>
              </SW-DATA-DEF-PROPS-CONDITIONAL>
            </SW-DATA-DEF-PROPS-VARIANTS>
          </SW-DATA-DEF-PROPS>
          <TYPE-TREF DEST="APPLICATION-PRIMITIVE-DATA-TYPE"
              >/AUTOSAR/CONC_670/SwcCompoAHB/
              ApplicationDataTypes/Type_Hugo</TYPE-TREF>
        </VARIABLE-DATA-PROTOTYPE>
      </DATA-ELEMENTS>
    </SENDER-RECEIVER-INTERFACE>
    <SENDER-RECEIVER-INTERFACE>
      <SHORT-NAME>IF_Bernd</SHORT-NAME>
      <IS-SERVICE>false</IS-SERVICE>
      <SERVICE-KIND>VENDOR-SPECIFIC</SERVICE-KIND>
      <DATA-ELEMENTS>
        <VARIABLE-DATA-PROTOTYPE>
          <SHORT-NAME>Bernd</SHORT-NAME>
          <CATEGORY>VALUE</CATEGORY>
          <SW-DATA-DEF-PROPS>
            <SW-DATA-DEF-PROPS-VARIANTS>
              <SW-DATA-DEF-PROPS-CONDITIONAL>
                <SW-CALIBRATION-ACCESS>READ-ONLY</SW-
                    CALIBRATION-ACCESS>
              </SW-DATA-DEF-PROPS-CONDITIONAL>
            </SW-DATA-DEF-PROPS-VARIANTS>
          </SW-DATA-DEF-PROPS>
          <TYPE-TREF DEST="APPLICATION-PRIMITIVE-DATA-TYPE"
              >/AUTOSAR/CONC_670/SwcCompoAHB/
              ApplicationDataTypes/Type_Bernd</TYPE-TREF>
        </VARIABLE-DATA-PROTOTYPE>
      </DATA-ELEMENTS>
    </SENDER-RECEIVER-INTERFACE>
    <SENDER-RECEIVER-INTERFACE>
      <SHORT-NAME>IF_Celine</SHORT-NAME>
      <IS-SERVICE>false</IS-SERVICE>
      <SERVICE-KIND>VENDOR-SPECIFIC</SERVICE-KIND>
      <DATA-ELEMENTS>
        <VARIABLE-DATA-PROTOTYPE>
          <SHORT-NAME>Celine</SHORT-NAME>
          <CATEGORY>VALUE</CATEGORY>
          <SW-DATA-DEF-PROPS>
            <SW-DATA-DEF-PROPS-VARIANTS>
              <SW-DATA-DEF-PROPS-CONDITIONAL>
                <SW-CALIBRATION-ACCESS>READ-ONLY</SW-
                    CALIBRATION-ACCESS>
              </SW-DATA-DEF-PROPS-CONDITIONAL>
            </SW-DATA-DEF-PROPS-VARIANTS>
          </SW-DATA-DEF-PROPS>
          <TYPE-TREF DEST="APPLICATION-PRIMITIVE-DATA-TYPE"
              >/AUTOSAR/CONC_670/SwcCompoAHB/
              ApplicationDataTypes/Type_Celine</TYPE-TREF>
        </VARIABLE-DATA-PROTOTYPE>
      </DATA-ELEMENTS>
```

```
    </SENDER-RECEIVER-INTERFACE>
    <CLIENT-SERVER-INTERFACE>
      <SHORT-NAME>IF_OpHugo</SHORT-NAME>
      <IS-SERVICE>false</IS-SERVICE>
      <OPERATIONS>
        <CLIENT-SERVER-OPERATION>
          <SHORT-NAME>OpHugo</SHORT-NAME>
          <ARGUMENTS>
            <ARGUMENT-DATA-PROTOTYPE>
              <SHORT-NAME>ArgIn_8</SHORT-NAME>
              <TYPE-TREF DEST="IMPLEMENTATION-DATA-TYPE">/
                  AUTOSAR_Platform/ImplementationDataTypes/
                  uint8</TYPE-TREF>
              <DIRECTION>IN</DIRECTION>
            </ARGUMENT-DATA-PROTOTYPE>
            <ARGUMENT-DATA-PROTOTYPE>
              <SHORT-NAME>ArgIn_16</SHORT-NAME>
              <TYPE-TREF DEST="IMPLEMENTATION-DATA-TYPE">/
                  AUTOSAR_Platform/ImplementationDataTypes/
                  uint16</TYPE-TREF>
              <DIRECTION>IN</DIRECTION>
            </ARGUMENT-DATA-PROTOTYPE>
            <ARGUMENT-DATA-PROTOTYPE>
              <SHORT-NAME>ArgOut_16</SHORT-NAME>
              <TYPE-TREF DEST="IMPLEMENTATION-DATA-TYPE">/
                  AUTOSAR_Platform/ImplementationDataTypes/
                  uint16</TYPE-TREF>
              <DIRECTION>OUT</DIRECTION>
            </ARGUMENT-DATA-PROTOTYPE>
          </ARGUMENTS>
        </CLIENT-SERVER-OPERATION>
      </OPERATIONS>
    </CLIENT-SERVER-INTERFACE>
    <SENDER-RECEIVER-INTERFACE>
      <SHORT-NAME>IF_Anton</SHORT-NAME>
      <IS-SERVICE>false</IS-SERVICE>
      <SERVICE-KIND>VENDOR-SPECIFIC</SERVICE-KIND>
      <DATA-ELEMENTS>
        <VARIABLE-DATA-PROTOTYPE>
          <SHORT-NAME>Anton</SHORT-NAME>
          <CATEGORY>VALUE</CATEGORY>
          <SW-DATA-DEF-PROPS>
            <SW-DATA-DEF-PROPS-VARIANTS>
              <SW-DATA-DEF-PROPS-CONDITIONAL>
                <SW-CALIBRATION-ACCESS>READ-ONLY</SW-
                    CALIBRATION-ACCESS>
              </SW-DATA-DEF-PROPS-CONDITIONAL>
            </SW-DATA-DEF-PROPS-VARIANTS>
          </SW-DATA-DEF-PROPS>
          <TYPE-TREF DEST="APPLICATION-PRIMITIVE-DATA-TYPE"
              >/AUTOSAR/CONC_670/SwcCompoAHB/
              ApplicationDataTypes/Type_Anton</TYPE-TREF>
        </VARIABLE-DATA-PROTOTYPE>
      </DATA-ELEMENTS>
    </SENDER-RECEIVER-INTERFACE>
  </ELEMENTS>
```

```
            </AR-PACKAGE>
            <AR-PACKAGE>
              <SHORT-NAME>Units</SHORT-NAME>
              <ELEMENTS>
                <UNIT>
                  <SHORT-NAME>No_Unit</SHORT-NAME>
                  <FACTOR-SI-TO-UNIT>1.0</FACTOR-SI-TO-UNIT>
                  <OFFSET-SI-TO-UNIT>0.0</OFFSET-SI-TO-UNIT>
                </UNIT>
              </ELEMENTS>
            </AR-PACKAGE>
          </AR-PACKAGES>
        </AR-PACKAGE>
      </AR-PACKAGES>
    </AR-PACKAGE>
  </AR-PACKAGES>
</AUTOSAR>
```

Listing A.6: DOC_SwCluC_SwcCompoAHB_SWCD.arxml

A.2.2 DOC_SwCluC_SwcCompoHost_SWCD.arxml

```
<AUTOSAR xmlns="http://autosar.org/schema/r4.0" xmlns:xsi="http://www.w3.
    org/2001/XMLSchema-instance" xsi:schemaLocation="http://autosar.org/
    schema/r4.0 AUTOSAR_00055.xsd">
  <AR-PACKAGES>
    <AR-PACKAGE>
      <SHORT-NAME>AUTOSAR</SHORT-NAME>
      <AR-PACKAGES>
        <AR-PACKAGE>
          <SHORT-NAME>CONC_670</SHORT-NAME>
          <AR-PACKAGES>
            <AR-PACKAGE>
              <SHORT-NAME>SwcCompoHost</SHORT-NAME>
              <AR-PACKAGES>
                <AR-PACKAGE>
                  <SHORT-NAME>SwComponentTypes</SHORT-NAME>
                  <ELEMENTS>
                    <COMPOSITION-SW-COMPONENT-TYPE>
                      <SHORT-NAME>SwcCompoHost</SHORT-NAME>
                      <PORTS>
                        <P-PORT-PROTOTYPE>
                          <SHORT-NAME>PP_Celine</SHORT-NAME>
                          <PROVIDED-INTERFACE-TREF DEST="SENDER-RECEIVER-
                              INTERFACE">/AUTOSAR/CONC_670/SwcCompoHost/
                              PortInterfaces/IF_Celine</PROVIDED-INTERFACE-
                              TREF>
                        </P-PORT-PROTOTYPE>
                        <R-PORT-PROTOTYPE>
                          <SHORT-NAME>RP_Bernd</SHORT-NAME>
```

```
      <REQUIRED-INTERFACE-TREF DEST="SENDER-RECEIVER-
          INTERFACE">/AUTOSAR/CONC_670/SwcCompoHost/
          PortInterfaces/IF_Bernd</REQUIRED-INTERFACE-
          TREF>
    </R-PORT-PROTOTYPE>
    <R-PORT-PROTOTYPE>
      <SHORT-NAME>RP_Hugo</SHORT-NAME>
      <REQUIRED-INTERFACE-TREF DEST="SENDER-RECEIVER-
          INTERFACE">/AUTOSAR/CONC_670/SwcCompoHost/
          PortInterfaces/IF_Hugo</REQUIRED-INTERFACE-
          TREF>
    </R-PORT-PROTOTYPE>
  </PORTS>
  <COMPONENTS>
    <SW-COMPONENT-PROTOTYPE>
      <SHORT-NAME>CPT_SwcClaus</SHORT-NAME>
      <TYPE-TREF DEST="APPLICATION-SW-COMPONENT-TYPE">/
          AUTOSAR/CONC_670/SwcClaus/SwComponentTypes/
          SwcClaus</TYPE-TREF>
    </SW-COMPONENT-PROTOTYPE>
    <SW-COMPONENT-PROTOTYPE>
      <SHORT-NAME>CPT_SwcCeline</SHORT-NAME>
      <TYPE-TREF DEST="APPLICATION-SW-COMPONENT-TYPE">/
          AUTOSAR/CONC_670/SwcCeline/SwComponentTypes/
          SwcCeline</TYPE-TREF>
    </SW-COMPONENT-PROTOTYPE>
  </COMPONENTS>
  <CONNECTORS>
    <ASSEMBLY-SW-CONNECTOR>
      <SHORT-NAME>
          ASC_CPT_SwcCeline_PP_Celine_CPT_SwcClaus_RP_Celine
          </SHORT-NAME>
      <PROVIDER-IREF>
        <CONTEXT-COMPONENT-REF DEST="SW-COMPONENT-
            PROTOTYPE">/AUTOSAR/CONC_670/SwcCompoHost/
            SwComponentTypes/SwcCompoHost/CPT_SwcCeline<
            /CONTEXT-COMPONENT-REF>
        <TARGET-P-PORT-REF DEST="P-PORT-PROTOTYPE">/
            AUTOSAR/CONC_670/SwcCeline/SwComponentTypes/
            SwcCeline/PP_Celine</TARGET-P-PORT-REF>
      </PROVIDER-IREF>
      <REQUESTER-IREF>
        <CONTEXT-COMPONENT-REF DEST="SW-COMPONENT-
            PROTOTYPE">/AUTOSAR/CONC_670/SwcCompoHost/
            SwComponentTypes/SwcCompoHost/CPT_SwcClaus</
            CONTEXT-COMPONENT-REF>
        <TARGET-R-PORT-REF DEST="R-PORT-PROTOTYPE">/
            AUTOSAR/CONC_670/SwcClaus/SwComponentTypes/
            SwcClaus/RP_Celine</TARGET-R-PORT-REF>
      </REQUESTER-IREF>
    </ASSEMBLY-SW-CONNECTOR>
    <DELEGATION-SW-CONNECTOR>
      <SHORT-NAME>DSC_PP_Celine_CPT_SwcCeline_PP_Celine
          </SHORT-NAME>
      <INNER-PORT-IREF>
        <P-PORT-IN-COMPOSITION-INSTANCE-REF>
```

```
            <CONTEXT-COMPONENT-REF DEST="SW-COMPONENT-
                PROTOTYPE">/AUTOSAR/CONC_670/SwcCompoHost/
                SwComponentTypes/SwcCompoHost/
                CPT_SwcCeline</CONTEXT-COMPONENT-REF>
            <TARGET-P-PORT-REF DEST="P-PORT-PROTOTYPE">/
                AUTOSAR/CONC_670/SwcCeline/
                SwComponentTypes/SwcCeline/PP_Celine</
                TARGET-P-PORT-REF>
          </P-PORT-IN-COMPOSITION-INSTANCE-REF>
        </INNER-PORT-IREF>
        <OUTER-PORT-REF DEST="P-PORT-PROTOTYPE">/AUTOSAR/
            CONC_670/SwcCompoHost/SwComponentTypes/
            SwcCompoHost/PP_Celine</OUTER-PORT-REF>
      </DELEGATION-SW-CONNECTOR>
      <DELEGATION-SW-CONNECTOR>
        <SHORT-NAME>DSC_RP_Bernd_CPT_SwcClaus_RP_Bernd</
            SHORT-NAME>
        <INNER-PORT-IREF>
          <R-PORT-IN-COMPOSITION-INSTANCE-REF>
            <CONTEXT-COMPONENT-REF DEST="SW-COMPONENT-
                PROTOTYPE">/AUTOSAR/CONC_670/SwcCompoHost/
                SwComponentTypes/SwcCompoHost/CPT_SwcClaus
                </CONTEXT-COMPONENT-REF>
            <TARGET-R-PORT-REF DEST="R-PORT-PROTOTYPE">/
                AUTOSAR/CONC_670/SwcClaus/SwComponentTypes
                /SwcClaus/RP_Bernd</TARGET-R-PORT-REF>
          </R-PORT-IN-COMPOSITION-INSTANCE-REF>
        </INNER-PORT-IREF>
        <OUTER-PORT-REF DEST="R-PORT-PROTOTYPE">/AUTOSAR/
            CONC_670/SwcCompoHost/SwComponentTypes/
            SwcCompoHost/RP_Bernd</OUTER-PORT-REF>
      </DELEGATION-SW-CONNECTOR>
      <DELEGATION-SW-CONNECTOR>
        <SHORT-NAME>DSC_RP_Hugo_CPT_SwcCeline_RP_Hugo</
            SHORT-NAME>
        <INNER-PORT-IREF>
          <R-PORT-IN-COMPOSITION-INSTANCE-REF>
            <CONTEXT-COMPONENT-REF DEST="SW-COMPONENT-
                PROTOTYPE">/AUTOSAR/CONC_670/SwcCompoHost/
                SwComponentTypes/SwcCompoHost/
                CPT_SwcCeline</CONTEXT-COMPONENT-REF>
            <TARGET-R-PORT-REF DEST="R-PORT-PROTOTYPE">/
                AUTOSAR/CONC_670/SwcCeline/
                SwComponentTypes/SwcCeline/RP_Hugo</TARGET
                -R-PORT-REF>
          </R-PORT-IN-COMPOSITION-INSTANCE-REF>
        </INNER-PORT-IREF>
        <OUTER-PORT-REF DEST="R-PORT-PROTOTYPE">/AUTOSAR/
            CONC_670/SwcCompoHost/SwComponentTypes/
            SwcCompoHost/RP_Hugo</OUTER-PORT-REF>
      </DELEGATION-SW-CONNECTOR>
    </CONNECTORS>
    <DATA-TYPE-MAPPING-REFS>
```

```
            <DATA-TYPE-MAPPING-REF DEST="DATA-TYPE-MAPPING-SET"
                >/AUTOSAR/CONC_670/SwcCompoHost/
                DataTypeMappingSets/DTMS_SwcCompoHost</DATA-TYPE
                -MAPPING-REF>
          </DATA-TYPE-MAPPING-REFS>
        </COMPOSITION-SW-COMPONENT-TYPE>
      </ELEMENTS>
    </AR-PACKAGE>
    <AR-PACKAGE>
      <SHORT-NAME>ApplicationDataTypes</SHORT-NAME>
      <ELEMENTS>
        <APPLICATION-PRIMITIVE-DATA-TYPE>
          <SHORT-NAME>Type_Claus</SHORT-NAME>
          <CATEGORY>VALUE</CATEGORY>
          <SW-DATA-DEF-PROPS>
            <SW-DATA-DEF-PROPS-VARIANTS>
              <SW-DATA-DEF-PROPS-CONDITIONAL>
                <SW-CALIBRATION-ACCESS>READ-ONLY</SW-
                    CALIBRATION-ACCESS>
                <COMPU-METHOD-REF DEST="COMPU-METHOD">/AUTOSAR/
                    CONC_670/SwcCompoHost/CompuMethods/Identical
                    </COMPU-METHOD-REF>
                <SW-IMPL-POLICY>STANDARD</SW-IMPL-POLICY>
              </SW-DATA-DEF-PROPS-CONDITIONAL>
            </SW-DATA-DEF-PROPS-VARIANTS>
          </SW-DATA-DEF-PROPS>
        </APPLICATION-PRIMITIVE-DATA-TYPE>
        <APPLICATION-PRIMITIVE-DATA-TYPE>
          <SHORT-NAME>Type_Bernd</SHORT-NAME>
          <CATEGORY>VALUE</CATEGORY>
          <SW-DATA-DEF-PROPS>
            <SW-DATA-DEF-PROPS-VARIANTS>
              <SW-DATA-DEF-PROPS-CONDITIONAL>
                <SW-CALIBRATION-ACCESS>READ-ONLY</SW-
                    CALIBRATION-ACCESS>
                <COMPU-METHOD-REF DEST="COMPU-METHOD">/AUTOSAR/
                    CONC_670/SwcCompoHost/CompuMethods/Identical
                    </COMPU-METHOD-REF>
                <SW-IMPL-POLICY>STANDARD</SW-IMPL-POLICY>
              </SW-DATA-DEF-PROPS-CONDITIONAL>
            </SW-DATA-DEF-PROPS-VARIANTS>
          </SW-DATA-DEF-PROPS>
        </APPLICATION-PRIMITIVE-DATA-TYPE>
        <APPLICATION-PRIMITIVE-DATA-TYPE>
          <SHORT-NAME>Type_Celine</SHORT-NAME>
          <CATEGORY>VALUE</CATEGORY>
          <SW-DATA-DEF-PROPS>
            <SW-DATA-DEF-PROPS-VARIANTS>
              <SW-DATA-DEF-PROPS-CONDITIONAL>
                <SW-CALIBRATION-ACCESS>READ-ONLY</SW-
                    CALIBRATION-ACCESS>
                <COMPU-METHOD-REF DEST="COMPU-METHOD">/AUTOSAR/
                    CONC_670/SwcCompoHost/CompuMethods/Identical
                    </COMPU-METHOD-REF>
                <SW-IMPL-POLICY>STANDARD</SW-IMPL-POLICY>
              </SW-DATA-DEF-PROPS-CONDITIONAL>
```

```
            </SW-DATA-DEF-PROPS-VARIANTS>
          </SW-DATA-DEF-PROPS>
        </APPLICATION-PRIMITIVE-DATA-TYPE>
        <APPLICATION-PRIMITIVE-DATA-TYPE>
          <SHORT-NAME>Type_Hugo</SHORT-NAME>
          <CATEGORY>VALUE</CATEGORY>
          <SW-DATA-DEF-PROPS>
            <SW-DATA-DEF-PROPS-VARIANTS>
              <SW-DATA-DEF-PROPS-CONDITIONAL>
                <SW-CALIBRATION-ACCESS>READ-ONLY</SW-
                    CALIBRATION-ACCESS>
                <COMPU-METHOD-REF DEST="COMPU-METHOD">/AUTOSAR/
                    CONC_670/SwcCompoHost/CompuMethods/Identical
                    </COMPU-METHOD-REF>
                <SW-IMPL-POLICY>STANDARD</SW-IMPL-POLICY>
              </SW-DATA-DEF-PROPS-CONDITIONAL>
            </SW-DATA-DEF-PROPS-VARIANTS>
          </SW-DATA-DEF-PROPS>
        </APPLICATION-PRIMITIVE-DATA-TYPE>
      </ELEMENTS>
    </AR-PACKAGE>
    <AR-PACKAGE>
      <SHORT-NAME>CompuMethods</SHORT-NAME>
      <ELEMENTS>
        <COMPU-METHOD>
          <SHORT-NAME>Identical</SHORT-NAME>
          <CATEGORY>IDENTICAL</CATEGORY>
          <UNIT-REF DEST="UNIT">/AUTOSAR/CONC_670/SwcCompoHost/
              Units/No_Unit</UNIT-REF>
        </COMPU-METHOD>
      </ELEMENTS>
    </AR-PACKAGE>
    <AR-PACKAGE>
      <SHORT-NAME>DataTypeMappingSets</SHORT-NAME>
      <ELEMENTS>
        <DATA-TYPE-MAPPING-SET>
          <SHORT-NAME>DTMS_SwcCompoHost</SHORT-NAME>
          <DATA-TYPE-MAPS>
            <DATA-TYPE-MAP>
              <APPLICATION-DATA-TYPE-REF DEST="APPLICATION-
                  PRIMITIVE-DATA-TYPE">/AUTOSAR/CONC_670/
                  SwcCompoHost/ApplicationDataTypes/Type_Claus</
                  APPLICATION-DATA-TYPE-REF>
              <IMPLEMENTATION-DATA-TYPE-REF DEST="
                  IMPLEMENTATION-DATA-TYPE">/AUTOSAR/CONC_670/
                  SwcCompoHost/ImplementationDataTypes/
                  Type_Claus</IMPLEMENTATION-DATA-TYPE-REF>
            </DATA-TYPE-MAP>
            <DATA-TYPE-MAP>
              <APPLICATION-DATA-TYPE-REF DEST="APPLICATION-
                  PRIMITIVE-DATA-TYPE">/AUTOSAR/CONC_670/
                  SwcCompoHost/ApplicationDataTypes/Type_Bernd</
                  APPLICATION-DATA-TYPE-REF>
```

```
            <IMPLEMENTATION-DATA-TYPE-REF DEST="
                IMPLEMENTATION-DATA-TYPE">/AUTOSAR/CONC_670/
                SwcCompoHost/ImplementationDataTypes/
                Type_Bernd</IMPLEMENTATION-DATA-TYPE-REF>
          </DATA-TYPE-MAP>
          <DATA-TYPE-MAP>
            <APPLICATION-DATA-TYPE-REF DEST="APPLICATION-
                PRIMITIVE-DATA-TYPE">/AUTOSAR/CONC_670/
                SwcCompoHost/ApplicationDataTypes/Type_Celine<
                /APPLICATION-DATA-TYPE-REF>
            <IMPLEMENTATION-DATA-TYPE-REF DEST="
                IMPLEMENTATION-DATA-TYPE">/AUTOSAR/CONC_670/
                SwcCompoHost/ImplementationDataTypes/
                Type_Celine</IMPLEMENTATION-DATA-TYPE-REF>
          </DATA-TYPE-MAP>
          <DATA-TYPE-MAP>
            <APPLICATION-DATA-TYPE-REF DEST="APPLICATION-
                PRIMITIVE-DATA-TYPE">/AUTOSAR/CONC_670/
                SwcCompoHost/ApplicationDataTypes/Type_Hugo</
                APPLICATION-DATA-TYPE-REF>
            <IMPLEMENTATION-DATA-TYPE-REF DEST="
                IMPLEMENTATION-DATA-TYPE">/AUTOSAR/CONC_670/
                SwcCompoHost/ImplementationDataTypes/Type_Hugo
                </IMPLEMENTATION-DATA-TYPE-REF>
          </DATA-TYPE-MAP>
        </DATA-TYPE-MAPS>
      </DATA-TYPE-MAPPING-SET>
    </ELEMENTS>
  </AR-PACKAGE>
  <AR-PACKAGE>
    <SHORT-NAME>ImplementationDataTypes</SHORT-NAME>
    <ELEMENTS>
      <IMPLEMENTATION-DATA-TYPE>
        <SHORT-NAME>Type_Bernd</SHORT-NAME>
        <CATEGORY>TYPE_REFERENCE</CATEGORY>
        <SW-DATA-DEF-PROPS>
          <SW-DATA-DEF-PROPS-VARIANTS>
            <SW-DATA-DEF-PROPS-CONDITIONAL>
              <IMPLEMENTATION-DATA-TYPE-REF DEST="
                  IMPLEMENTATION-DATA-TYPE">/AUTOSAR_Platform/
                  ImplementationDataTypes/uint8</
                  IMPLEMENTATION-DATA-TYPE-REF>
            </SW-DATA-DEF-PROPS-CONDITIONAL>
          </SW-DATA-DEF-PROPS-VARIANTS>
        </SW-DATA-DEF-PROPS>
      </IMPLEMENTATION-DATA-TYPE>
      <IMPLEMENTATION-DATA-TYPE>
        <SHORT-NAME>Type_Celine</SHORT-NAME>
        <CATEGORY>TYPE_REFERENCE</CATEGORY>
        <SW-DATA-DEF-PROPS>
          <SW-DATA-DEF-PROPS-VARIANTS>
            <SW-DATA-DEF-PROPS-CONDITIONAL>
              <IMPLEMENTATION-DATA-TYPE-REF DEST="
                  IMPLEMENTATION-DATA-TYPE">/AUTOSAR_Platform/
                  ImplementationDataTypes/sint16</
                  IMPLEMENTATION-DATA-TYPE-REF>
```

```
            </SW-DATA-DEF-PROPS-CONDITIONAL>
          </SW-DATA-DEF-PROPS-VARIANTS>
        </SW-DATA-DEF-PROPS>
      </IMPLEMENTATION-DATA-TYPE>
      <IMPLEMENTATION-DATA-TYPE>
        <SHORT-NAME>Type_Claus</SHORT-NAME>
        <CATEGORY>TYPE_REFERENCE</CATEGORY>
        <SW-DATA-DEF-PROPS>
          <SW-DATA-DEF-PROPS-VARIANTS>
            <SW-DATA-DEF-PROPS-CONDITIONAL>
              <IMPLEMENTATION-DATA-TYPE-REF DEST="
                  IMPLEMENTATION-DATA-TYPE">/AUTOSAR_Platform/
                  ImplementationDataTypes/uint16</
                  IMPLEMENTATION-DATA-TYPE-REF>
            </SW-DATA-DEF-PROPS-CONDITIONAL>
          </SW-DATA-DEF-PROPS-VARIANTS>
        </SW-DATA-DEF-PROPS>
      </IMPLEMENTATION-DATA-TYPE>
      <IMPLEMENTATION-DATA-TYPE>
        <SHORT-NAME>Type_Hugo</SHORT-NAME>
        <CATEGORY>TYPE_REFERENCE</CATEGORY>
        <SW-DATA-DEF-PROPS>
          <SW-DATA-DEF-PROPS-VARIANTS>
            <SW-DATA-DEF-PROPS-CONDITIONAL>
              <IMPLEMENTATION-DATA-TYPE-REF DEST="
                  IMPLEMENTATION-DATA-TYPE">/AUTOSAR_Platform/
                  ImplementationDataTypes/uint32</
                  IMPLEMENTATION-DATA-TYPE-REF>
            </SW-DATA-DEF-PROPS-CONDITIONAL>
          </SW-DATA-DEF-PROPS-VARIANTS>
        </SW-DATA-DEF-PROPS>
      </IMPLEMENTATION-DATA-TYPE>
    </ELEMENTS>
  </AR-PACKAGE>
  <AR-PACKAGE>
    <SHORT-NAME>PortInterfaces</SHORT-NAME>
    <ELEMENTS>
      <SENDER-RECEIVER-INTERFACE>
        <SHORT-NAME>IF_Claus</SHORT-NAME>
        <IS-SERVICE>false</IS-SERVICE>
        <SERVICE-KIND>VENDOR-SPECIFIC</SERVICE-KIND>
        <DATA-ELEMENTS>
          <VARIABLE-DATA-PROTOTYPE>
            <SHORT-NAME>Claus</SHORT-NAME>
            <CATEGORY>VALUE</CATEGORY>
            <SW-DATA-DEF-PROPS>
              <SW-DATA-DEF-PROPS-VARIANTS>
                <SW-DATA-DEF-PROPS-CONDITIONAL>
                  <SW-CALIBRATION-ACCESS>READ-ONLY</SW-
                      CALIBRATION-ACCESS>
                </SW-DATA-DEF-PROPS-CONDITIONAL>
              </SW-DATA-DEF-PROPS-VARIANTS>
            </SW-DATA-DEF-PROPS>
            <TYPE-TREF DEST="APPLICATION-PRIMITIVE-DATA-TYPE"
                >/AUTOSAR/CONC_670/SwcCompoHost/
                ApplicationDataTypes/Type_Claus</TYPE-TREF>
```

```
      </VARIABLE-DATA-PROTOTYPE>
    </DATA-ELEMENTS>
  </SENDER-RECEIVER-INTERFACE>
  <SENDER-RECEIVER-INTERFACE>
    <SHORT-NAME>IF_Bernd</SHORT-NAME>
    <IS-SERVICE>false</IS-SERVICE>
    <SERVICE-KIND>VENDOR-SPECIFIC</SERVICE-KIND>
    <DATA-ELEMENTS>
      <VARIABLE-DATA-PROTOTYPE>
        <SHORT-NAME>Bernd</SHORT-NAME>
        <CATEGORY>VALUE</CATEGORY>
        <SW-DATA-DEF-PROPS>
          <SW-DATA-DEF-PROPS-VARIANTS>
            <SW-DATA-DEF-PROPS-CONDITIONAL>
              <SW-CALIBRATION-ACCESS>READ-ONLY</SW-
                  CALIBRATION-ACCESS>
            </SW-DATA-DEF-PROPS-CONDITIONAL>
          </SW-DATA-DEF-PROPS-VARIANTS>
        </SW-DATA-DEF-PROPS>
        <TYPE-TREF DEST="APPLICATION-PRIMITIVE-DATA-TYPE"
            >/AUTOSAR/CONC_670/SwcCompoHost/
            ApplicationDataTypes/Type_Bernd</TYPE-TREF>
      </VARIABLE-DATA-PROTOTYPE>
    </DATA-ELEMENTS>
  </SENDER-RECEIVER-INTERFACE>
  <SENDER-RECEIVER-INTERFACE>
    <SHORT-NAME>IF_Celine</SHORT-NAME>
    <IS-SERVICE>false</IS-SERVICE>
    <SERVICE-KIND>VENDOR-SPECIFIC</SERVICE-KIND>
    <DATA-ELEMENTS>
      <VARIABLE-DATA-PROTOTYPE>
        <SHORT-NAME>Celine</SHORT-NAME>
        <CATEGORY>VALUE</CATEGORY>
        <SW-DATA-DEF-PROPS>
          <SW-DATA-DEF-PROPS-VARIANTS>
            <SW-DATA-DEF-PROPS-CONDITIONAL>
              <SW-CALIBRATION-ACCESS>READ-ONLY</SW-
                  CALIBRATION-ACCESS>
            </SW-DATA-DEF-PROPS-CONDITIONAL>
          </SW-DATA-DEF-PROPS-VARIANTS>
        </SW-DATA-DEF-PROPS>
        <TYPE-TREF DEST="APPLICATION-PRIMITIVE-DATA-TYPE"
            >/AUTOSAR/CONC_670/SwcCompoHost/
            ApplicationDataTypes/Type_Celine</TYPE-TREF>
      </VARIABLE-DATA-PROTOTYPE>
    </DATA-ELEMENTS>
  </SENDER-RECEIVER-INTERFACE>
  <CLIENT-SERVER-INTERFACE>
    <SHORT-NAME>IF_OpClaus</SHORT-NAME>
    <IS-SERVICE>false</IS-SERVICE>
    <OPERATIONS>
      <CLIENT-SERVER-OPERATION>
        <SHORT-NAME>OpClaus</SHORT-NAME>
        <ARGUMENTS>
          <ARGUMENT-DATA-PROTOTYPE>
            <SHORT-NAME>ArgIn_8</SHORT-NAME>
```

```
                    <TYPE-TREF DEST="IMPLEMENTATION-DATA-TYPE">/
                        AUTOSAR_Platform/ImplementationDataTypes/
                        uint8</TYPE-TREF>
                    <DIRECTION>IN</DIRECTION>
                  </ARGUMENT-DATA-PROTOTYPE>
                  <ARGUMENT-DATA-PROTOTYPE>
                    <SHORT-NAME>ArgIn_16</SHORT-NAME>
                    <TYPE-TREF DEST="IMPLEMENTATION-DATA-TYPE">/
                        AUTOSAR_Platform/ImplementationDataTypes/
                        uint16</TYPE-TREF>
                    <DIRECTION>IN</DIRECTION>
                  </ARGUMENT-DATA-PROTOTYPE>
                  <ARGUMENT-DATA-PROTOTYPE>
                    <SHORT-NAME>ArgOut_16</SHORT-NAME>
                    <TYPE-TREF DEST="IMPLEMENTATION-DATA-TYPE">/
                        AUTOSAR_Platform/ImplementationDataTypes/
                        uint16</TYPE-TREF>
                    <DIRECTION>OUT</DIRECTION>
                  </ARGUMENT-DATA-PROTOTYPE>
                </ARGUMENTS>
              </CLIENT-SERVER-OPERATION>
            </OPERATIONS>
          </CLIENT-SERVER-INTERFACE>
          <SENDER-RECEIVER-INTERFACE>
            <SHORT-NAME>IF_Hugo</SHORT-NAME>
            <IS-SERVICE>false</IS-SERVICE>
            <SERVICE-KIND>VENDOR-SPECIFIC</SERVICE-KIND>
            <DATA-ELEMENTS>
              <VARIABLE-DATA-PROTOTYPE>
                <SHORT-NAME>Hugo</SHORT-NAME>
                <CATEGORY>VALUE</CATEGORY>
                <SW-DATA-DEF-PROPS>
                  <SW-DATA-DEF-PROPS-VARIANTS>
                    <SW-DATA-DEF-PROPS-CONDITIONAL>
                      <SW-CALIBRATION-ACCESS>READ-ONLY</SW-
                          CALIBRATION-ACCESS>
                    </SW-DATA-DEF-PROPS-CONDITIONAL>
                  </SW-DATA-DEF-PROPS-VARIANTS>
                </SW-DATA-DEF-PROPS>
                <TYPE-TREF DEST="APPLICATION-PRIMITIVE-DATA-TYPE"
                    >/AUTOSAR/CONC_670/SwcHugo/
                    ApplicationDataTypes/Type_Hugo</TYPE-TREF>
              </VARIABLE-DATA-PROTOTYPE>
            </DATA-ELEMENTS>
          </SENDER-RECEIVER-INTERFACE>
        </ELEMENTS>
      </AR-PACKAGE>
      <AR-PACKAGE>
        <SHORT-NAME>Units</SHORT-NAME>
        <ELEMENTS>
          <UNIT>
            <SHORT-NAME>No_Unit</SHORT-NAME>
            <FACTOR-SI-TO-UNIT>1.0</FACTOR-SI-TO-UNIT>
            <OFFSET-SI-TO-UNIT>0.0</OFFSET-SI-TO-UNIT>
          </UNIT>
        </ELEMENTS>
```

```
                </AR-PACKAGE>
              </AR-PACKAGES>
            </AR-PACKAGE>
          </AR-PACKAGES>
        </AR-PACKAGE>
      </AR-PACKAGES>
    </AR-PACKAGE>
  </AR-PACKAGES>
</AUTOSAR>
```

Listing A.7: DOC_SwCluC_SwcCompoHost_SWCD.arxml

A.2.3 DOC_SwCluC_Sys_TopLvl_SWCD.arxml

```
<AUTOSAR xmlns="http://autosar.org/schema/r4.0" xmlns:xsi="http://www.w3.
    org/2001/XMLSchema-instance" xsi:schemaLocation="http://autosar.org/
    schema/r4.0 AUTOSAR_00055.xsd">
  <AR-PACKAGES>
    <AR-PACKAGE>
      <SHORT-NAME>AUTOSAR</SHORT-NAME>
      <AR-PACKAGES>
        <AR-PACKAGE>
          <SHORT-NAME>CONC_670</SHORT-NAME>
          <AR-PACKAGES>
            <AR-PACKAGE>
              <SHORT-NAME>PCT_TopLvl</SHORT-NAME>
              <AR-PACKAGES>
                <AR-PACKAGE>
                  <SHORT-NAME>SwComponentTypes</SHORT-NAME>
                  <ELEMENTS>
                    <COMPOSITION-SW-COMPONENT-TYPE>
                      <SHORT-NAME>TopLvl</SHORT-NAME>
                      <COMPONENTS>
                        <SW-COMPONENT-PROTOTYPE>
                          <SHORT-NAME>CPT_SwcCompoAHB</SHORT-NAME>
                          <TYPE-TREF DEST="COMPOSITION-SW-COMPONENT-TYPE">/
                              AUTOSAR/CONC_670/SwcCompoAHB/SwComponentTypes/
                              SwcCompoAHB</TYPE-TREF>
                        </SW-COMPONENT-PROTOTYPE>
                        <SW-COMPONENT-PROTOTYPE>
                          <SHORT-NAME>CPT_SwcCompoHost</SHORT-NAME>
                          <TYPE-TREF DEST="COMPOSITION-SW-COMPONENT-TYPE">/
                              AUTOSAR/CONC_670/SwcCompoHost/SwComponentTypes
                              /SwcCompoHost</TYPE-TREF>
                        </SW-COMPONENT-PROTOTYPE>
                      </COMPONENTS>
                      <CONNECTORS>
                        <ASSEMBLY-SW-CONNECTOR>
                          <SHORT-NAME>ASC_PP_Celine_RP_Celine</SHORT-NAME>
                          <PROVIDER-IREF>
```

```
            <CONTEXT-COMPONENT-REF DEST="SW-COMPONENT-
                PROTOTYPE">/AUTOSAR/CONC_670/PCT_TopLvl/
                SwComponentTypes/TopLvl/CPT_SwcCompoHost</
                CONTEXT-COMPONENT-REF>
            <TARGET-P-PORT-REF DEST="P-PORT-PROTOTYPE">/
                AUTOSAR/CONC_670/SwcCompoHost/
                SwComponentTypes/SwcCompoHost/PP_Celine</
                TARGET-P-PORT-REF>
          </PROVIDER-IREF>
          <REQUESTER-IREF>
            <CONTEXT-COMPONENT-REF DEST="SW-COMPONENT-
                PROTOTYPE">/AUTOSAR/CONC_670/PCT_TopLvl/
                SwComponentTypes/TopLvl/CPT_SwcCompoAHB</
                CONTEXT-COMPONENT-REF>
            <TARGET-R-PORT-REF DEST="R-PORT-PROTOTYPE">/
                AUTOSAR/CONC_670/SwcCompoAHB/
                SwComponentTypes/SwcCompoAHB/RP_Celine</
                TARGET-R-PORT-REF>
          </REQUESTER-IREF>
        </ASSEMBLY-SW-CONNECTOR>
        <ASSEMBLY-SW-CONNECTOR>
          <SHORT-NAME>ASC_PP_Bernd_RP_Bernd</SHORT-NAME>
          <PROVIDER-IREF>
            <CONTEXT-COMPONENT-REF DEST="SW-COMPONENT-
                PROTOTYPE">/AUTOSAR/CONC_670/PCT_TopLvl/
                SwComponentTypes/TopLvl/CPT_SwcCompoAHB</
                CONTEXT-COMPONENT-REF>
            <TARGET-P-PORT-REF DEST="P-PORT-PROTOTYPE">/
                AUTOSAR/CONC_670/SwcCompoAHB/
                SwComponentTypes/SwcCompoAHB/PP_Bernd</
                TARGET-P-PORT-REF>
          </PROVIDER-IREF>
          <REQUESTER-IREF>
            <CONTEXT-COMPONENT-REF DEST="SW-COMPONENT-
                PROTOTYPE">/AUTOSAR/CONC_670/PCT_TopLvl/
                SwComponentTypes/TopLvl/CPT_SwcCompoHost</
                CONTEXT-COMPONENT-REF>
            <TARGET-R-PORT-REF DEST="R-PORT-PROTOTYPE">/
                AUTOSAR/CONC_670/SwcCompoHost/
                SwComponentTypes/SwcCompoHost/RP_Bernd</
                TARGET-R-PORT-REF>
          </REQUESTER-IREF>
        </ASSEMBLY-SW-CONNECTOR>
      </CONNECTORS>
    </COMPOSITION-SW-COMPONENT-TYPE>
  </ELEMENTS>
 </AR-PACKAGE>
</AR-PACKAGES>
</AR-PACKAGE>
</AR-PACKAGES>
</AR-PACKAGE>
</AR-PACKAGES>
</AR-PACKAGE>
</AR-PACKAGES>
```

```
</AUTOSAR>
```

Listing A.8: DOC_SwCluC_Sys_TopLvl_SWCD.arxml

A.2.4 DOC_SwCluC_Sys_SwClusters.arxml

```
<AUTOSAR xmlns="http://autosar.org/schema/r4.0"
  xmlns:xsi="http://www.w3.org/2001/XMLSchema-instance" xsi:schemaLocation=
      "http://autosar.org/schema/r4.0 AUTOSAR_00055.xsd">
  <ADMIN-DATA>
    <USED-LANGUAGES></USED-LANGUAGES>
  </ADMIN-DATA>
  <AR-PACKAGES>
    <AR-PACKAGE>
      <SHORT-NAME>AUTOSAR</SHORT-NAME>
      <AR-PACKAGES>
        <AR-PACKAGE>
          <SHORT-NAME>CONC_670</SHORT-NAME>
          <AR-PACKAGES>
            <AR-PACKAGE>
              <SHORT-NAME>PCFG_SYS</SHORT-NAME>
              <AR-PACKAGES>
                <AR-PACKAGE>
                  <SHORT-NAME>CpSoftwareClusters</SHORT-NAME>
                  <ELEMENTS>
                    <CP-SOFTWARE-CLUSTER>
                      <SHORT-NAME>SwClu_Host</SHORT-NAME>
                      <CATEGORY>HOST_SOFTWARE_CLUSTER</CATEGORY>
                      <SOFTWARE-CLUSTER-ID>0</SOFTWARE-CLUSTER-ID>
                      <SW-COMPONENT-ASSIGNMENTS>
                        <SW-COMPONENT-PROTOTYPE-ASSIGNMENT>
                          <SW-COMPONENT-IREF>
                            <CONTEXT-COMPOSITION-REF DEST="ROOT-SW-
                                COMPOSITION-PROTOTYPE">/AUTOSAR/CONC_670/
                                PCT_TopLvl/Systems/System_TopLvl/Sys_TopLvl<
                                /CONTEXT-COMPOSITION-REF>
                            <TARGET-COMPONENT-REF DEST="SW-COMPONENT-
                                PROTOTYPE">/AUTOSAR/CONC_670/PCT_TopLvl/
                                SwComponentTypes/TopLvl/CPT_SwcCompoHost</
                                TARGET-COMPONENT-REF>
                          </SW-COMPONENT-IREF>
                        </SW-COMPONENT-PROTOTYPE-ASSIGNMENT>
                      </SW-COMPONENT-ASSIGNMENTS>
                    </CP-SOFTWARE-CLUSTER>
                    <CP-SOFTWARE-CLUSTER>
                      <SHORT-NAME>SwClu_AHB</SHORT-NAME>
                      <CATEGORY>APPLICATION_SOFTWARE_CLUSTER</CATEGORY>
                      <SOFTWARE-CLUSTER-ID>1</SOFTWARE-CLUSTER-ID>
                      <SW-COMPONENT-ASSIGNMENTS>
                        <SW-COMPONENT-PROTOTYPE-ASSIGNMENT>
                          <SW-COMPONENT-IREF>
```

```
                        <CONTEXT-COMPOSITION-REF DEST="ROOT-SW-
                            COMPOSITION-PROTOTYPE">/AUTOSAR/CONC_670/
                            PCT_TopLvl/Systems/System_TopLvl/Sys_TopLvl<
                            /CONTEXT-COMPOSITION-REF>
                        <TARGET-COMPONENT-REF DEST="SW-COMPONENT-
                            PROTOTYPE">/AUTOSAR/CONC_670/PCT_TopLvl/
                            SwComponentTypes/TopLvl/CPT_SwcCompoAHB</
                            TARGET-COMPONENT-REF>
                      </SW-COMPONENT-IREF>
                    </SW-COMPONENT-PROTOTYPE-ASSIGNMENT>
                  </SW-COMPONENT-ASSIGNMENTS>
                </CP-SOFTWARE-CLUSTER>
              </ELEMENTS>
            </AR-PACKAGE>
          </AR-PACKAGES>
        </AR-PACKAGE>
      </AR-PACKAGES>
    </AR-PACKAGE>
  </AR-PACKAGES>
</AUTOSAR>
```

Listing A.9: DOC_SwCluC_Sys_SwClusters.arxml

A.2.5 DOC_SwCluC_Sys_Descr_TopLvl.arxml

```
<AUTOSAR xmlns="http://autosar.org/schema/r4.0" xmlns:xsi="http://www.w3.
    org/2001/XMLSchema-instance" xsi:schemaLocation="http://autosar.org/
    schema/r4.0 AUTOSAR_00055.xsd">
  <AR-PACKAGES>
    <AR-PACKAGE>
      <SHORT-NAME>AUTOSAR</SHORT-NAME>
      <AR-PACKAGES>
        <AR-PACKAGE>
          <SHORT-NAME>CONC_670</SHORT-NAME>
          <AR-PACKAGES>
            <AR-PACKAGE>
              <SHORT-NAME>PCT_TopLvl</SHORT-NAME>
              <AR-PACKAGES>
                <AR-PACKAGE>
                  <SHORT-NAME>Systems</SHORT-NAME>
                  <ELEMENTS>
                    <SYSTEM>
                      <SHORT-NAME>System_TopLvl</SHORT-NAME>
                      <CATEGORY>ECU_SYSTEM_DESCRIPTION</CATEGORY>
                      <MAPPINGS>
                        <SYSTEM-MAPPING>
                          <SHORT-NAME>Sys_TopLvl_Maps</SHORT-NAME>
                          <PORT-ELEMENT-TO-COM-RESOURCE-MAPPINGS>
                            <PORT-ELEMENT-TO-COMMUNICATION-RESOURCE-MAPPING
                                >
```

```
    <SHORT-NAME>Res_Map_DE_Anton</SHORT-NAME>
    <COMMUNICATION-RESOURCE-REF DEST="CP-SOFTWARE
       -CLUSTER-COMMUNICATION-RESOURCE">/AUTOSAR/
       CONC_670/SysResPool/
       CpSoftwareClusterResourcePools/
       ComResourcePool/Anton</COMMUNICATION-
       RESOURCE-REF>
    <VARIABLE-DATA-PROTOTYPE-IREF>
      <CONTEXT-COMPONENT-REF DEST="SW-COMPONENT-
         PROTOTYPE">/AUTOSAR/CONC_670/PCT_TopLvl/
         SwComponentTypes/TopLvl/CPT_SwcCompoAHB<
         /CONTEXT-COMPONENT-REF>
      <CONTEXT-COMPOSITION-REF DEST="ROOT-SW-
         COMPOSITION-PROTOTYPE">/AUTOSAR/CONC_670
         /PCT_TopLvl/Systems/System_TopLvl/
         Sys_TopLvl</CONTEXT-COMPOSITION-REF>
      <CONTEXT-PORT-REF DEST="P-PORT-PROTOTYPE">/
         AUTOSAR/CONC_670/SwcCompoAHB/
         SwComponentTypes/SwcCompoAHB/PP_Anton</
         CONTEXT-PORT-REF>
      <TARGET-DATA-PROTOTYPE-REF DEST="VARIABLE-
         DATA-PROTOTYPE">/AUTOSAR/CONC_670/
         SwcCompoAHB/PortInterfaces/IF_Anton/
         Anton</TARGET-DATA-PROTOTYPE-REF>
    </VARIABLE-DATA-PROTOTYPE-IREF>
  </PORT-ELEMENT-TO-COMMUNICATION-RESOURCE-
     MAPPING>
  <PORT-ELEMENT-TO-COMMUNICATION-RESOURCE-MAPPING
     >
    <SHORT-NAME>Res_Map_DE_Bernd</SHORT-NAME>
    <COMMUNICATION-RESOURCE-REF DEST="CP-SOFTWARE
       -CLUSTER-COMMUNICATION-RESOURCE">/AUTOSAR/
       CONC_670/SysResPool/
       CpSoftwareClusterResourcePools/
       ComResourcePool/Bernd</COMMUNICATION-
       RESOURCE-REF>
    <VARIABLE-DATA-PROTOTYPE-IREF>
      <CONTEXT-COMPONENT-REF DEST="SW-COMPONENT-
         PROTOTYPE">/AUTOSAR/CONC_670/PCT_TopLvl/
         SwComponentTypes/TopLvl/CPT_SwcCompoAHB<
         /CONTEXT-COMPONENT-REF>
      <CONTEXT-COMPOSITION-REF DEST="ROOT-SW-
         COMPOSITION-PROTOTYPE">/AUTOSAR/CONC_670
         /PCT_TopLvl/Systems/System_TopLvl/
         Sys_TopLvl</CONTEXT-COMPOSITION-REF>
      <CONTEXT-PORT-REF DEST="P-PORT-PROTOTYPE">/
         AUTOSAR/CONC_670/SwcCompoAHB/
         SwComponentTypes/SwcCompoAHB/PP_Bernd</
         CONTEXT-PORT-REF>
      <TARGET-DATA-PROTOTYPE-REF DEST="VARIABLE-
         DATA-PROTOTYPE">/AUTOSAR/CONC_670/
         SwcCompoAHB/PortInterfaces/IF_Bernd/
         Bernd</TARGET-DATA-PROTOTYPE-REF>
    </VARIABLE-DATA-PROTOTYPE-IREF>
  </PORT-ELEMENT-TO-COMMUNICATION-RESOURCE-
     MAPPING>
```

```
<PORT-ELEMENT-TO-COMMUNICATION-RESOURCE-MAPPING
    >
  <SHORT-NAME>Res_Map_DE_Celine</SHORT-NAME>
  <COMMUNICATION-RESOURCE-REF DEST="CP-SOFTWARE
      -CLUSTER-COMMUNICATION-RESOURCE">/AUTOSAR/
      CONC_670/SysResPool/
      CpSoftwareClusterResourcePools/
      ComResourcePool/Celine</COMMUNICATION-
      RESOURCE-REF>
  <VARIABLE-DATA-PROTOTYPE-IREF>
    <CONTEXT-COMPONENT-REF DEST="SW-COMPONENT-
        PROTOTYPE">/AUTOSAR/CONC_670/PCT_TopLvl/
        SwComponentTypes/TopLvl/CPT_SwcCompoHost
        </CONTEXT-COMPONENT-REF>
    <CONTEXT-COMPOSITION-REF DEST="ROOT-SW-
        COMPOSITION-PROTOTYPE">/AUTOSAR/CONC_670
        /PCT_TopLvl/Systems/System_TopLvl/
        Sys_TopLvl</CONTEXT-COMPOSITION-REF>
    <CONTEXT-PORT-REF DEST="P-PORT-PROTOTYPE">/
        AUTOSAR/CONC_670/SwcCompoHost/
        SwComponentTypes/SwcCompoHost/PP_Celine<
        /CONTEXT-PORT-REF>
    <TARGET-DATA-PROTOTYPE-REF DEST="VARIABLE-
        DATA-PROTOTYPE">/AUTOSAR/CONC_670/
        SwcCompoHost/PortInterfaces/IF_Celine/
        Celine</TARGET-DATA-PROTOTYPE-REF>
  </VARIABLE-DATA-PROTOTYPE-IREF>
</PORT-ELEMENT-TO-COMMUNICATION-RESOURCE-
    MAPPING>
<PORT-ELEMENT-TO-COMMUNICATION-RESOURCE-MAPPING
    >
  <SHORT-NAME>Res_Map_DE_Hugo</SHORT-NAME>
  <COMMUNICATION-RESOURCE-REF DEST="CP-SOFTWARE
      -CLUSTER-COMMUNICATION-RESOURCE">/AUTOSAR/
      CONC_670/SysResPool/
      CpSoftwareClusterResourcePools/
      ComResourcePool/Celine</COMMUNICATION-
      RESOURCE-REF>
  <VARIABLE-DATA-PROTOTYPE-IREF>
    <CONTEXT-COMPONENT-REF DEST="SW-COMPONENT-
        PROTOTYPE">/AUTOSAR/CONC_670/PCT_TopLvl/
        SwComponentTypes/TopLvl/CPT_SwcCompoHost
        </CONTEXT-COMPONENT-REF>
    <CONTEXT-COMPOSITION-REF DEST="ROOT-SW-
        COMPOSITION-PROTOTYPE">/AUTOSAR/CONC_670
        /PCT_TopLvl/Systems/System_TopLvl/
        Sys_TopLvl</CONTEXT-COMPOSITION-REF>
    <CONTEXT-PORT-REF DEST="R-PORT-PROTOTYPE">/
        AUTOSAR/CONC_670/SwcCompoHost/
        SwComponentTypes/SwcCompoHost/RP_Hugo</
        CONTEXT-PORT-REF>
    <TARGET-DATA-PROTOTYPE-REF DEST="VARIABLE-
        DATA-PROTOTYPE">/AUTOSAR/CONC_670/
        SwcCompoHost/PortInterfaces/IF_Hugo/Hugo
        </TARGET-DATA-PROTOTYPE-REF>
  </VARIABLE-DATA-PROTOTYPE-IREF>
```

```
      </PORT-ELEMENT-TO-COMMUNICATION-RESOURCE-
          MAPPING>
    </PORT-ELEMENT-TO-COM-RESOURCE-MAPPINGS>
    <SOFTWARE-CLUSTER-TO-RESOURCE-MAPPINGS>
      <CP-SOFTWARE-CLUSTER-TO-RESOURCE-MAPPING>
        <SHORT-NAME>Res_Map_BaseConfigCheck_AHB</
            SHORT-NAME>
        <DESC>
          <L-2 L="EN">Software Cluster resource
              mapping Base Config Check AHB for the
              complete ECU</L-2>
        </DESC>
        <PROVIDER-REF DEST="CP-SOFTWARE-CLUSTER">/
            AUTOSAR/CONC_670/PCFG_SYS/
            CpSoftwareClusters/SwClu_Host</PROVIDER-
            REF>
        <REQUESTER-REFS>
          <REQUESTER-REF DEST="CP-SOFTWARE-CLUSTER">/
              AUTOSAR/CONC_670/PCFG_SYS/
              CpSoftwareClusters/SwClu_AHB</REQUESTER-
              REF>
        </REQUESTER-REFS>
        <SERVICE-RESOURCE-REF DEST="CP-SOFTWARE-
            CLUSTER-SERVICE-RESOURCE">/AUTOSAR/
            CONC_670/SysResPool/
            CpSoftwareClusterResourcePools/
            SwClusCResourcePool/BaseConfigCheck_AHB</
            SERVICE-RESOURCE-REF>
      </CP-SOFTWARE-CLUSTER-TO-RESOURCE-MAPPING>
      <CP-SOFTWARE-CLUSTER-TO-RESOURCE-MAPPING>
        <SHORT-NAME>Res_Map_XccBaseSocket_AHB</SHORT-
            NAME>
        <DESC>
          <L-2 L="EN">Software Cluster resource
              mapping Xcc Base Socket AHB for the
              complete ECU</L-2>
        </DESC>
        <PROVIDER-REF DEST="CP-SOFTWARE-CLUSTER">/
            AUTOSAR/CONC_670/PCFG_SYS/
            CpSoftwareClusters/SwClu_Host</PROVIDER-
            REF>
        <REQUESTER-REFS>
          <REQUESTER-REF DEST="CP-SOFTWARE-CLUSTER">/
              AUTOSAR/CONC_670/PCFG_SYS/
              CpSoftwareClusters/SwClu_AHB</REQUESTER-
              REF>
        </REQUESTER-REFS>
        <SERVICE-RESOURCE-REF DEST="CP-SOFTWARE-
            CLUSTER-SERVICE-RESOURCE">/AUTOSAR/
            CONC_670/SysResPool/
            CpSoftwareClusterResourcePools/
            SwClusCResourcePool/XccBaseSocket_AHB</
            SERVICE-RESOURCE-REF>
      </CP-SOFTWARE-CLUSTER-TO-RESOURCE-MAPPING>

      <CP-SOFTWARE-CLUSTER-TO-RESOURCE-MAPPING>
```

```
    <SHORT-NAME>Res_Map_OsBaseSocket_AHB</SHORT-
      NAME>
    <DESC>
      <L-2 L="EN">Software Cluster resource
        mapping Xcc Base Socket AHB for the
        complete ECU</L-2>
    </DESC>
    <PROVIDER-REF DEST="CP-SOFTWARE-CLUSTER">/
      AUTOSAR/CONC_670/PCFG_SYS/
      CpSoftwareClusters/SwClu_Host</PROVIDER-
      REF>
    <REQUESTER-REFS>
      <REQUESTER-REF DEST="CP-SOFTWARE-CLUSTER">/
        AUTOSAR/CONC_670/PCFG_SYS/
        CpSoftwareClusters/SwClu_AHB</REQUESTER-
        REF>
    </REQUESTER-REFS>
    <SERVICE-RESOURCE-REF DEST="CP-SOFTWARE-
      CLUSTER-SERVICE-RESOURCE">/AUTOSAR/
      CONC_670/SysResPool/
      CpSoftwareClusterResourcePools/
      OsResourcePool/OsBaseSocket_AHB</SERVICE-
      RESOURCE-REF>
  </CP-SOFTWARE-CLUSTER-TO-RESOURCE-MAPPING>

  <CP-SOFTWARE-CLUSTER-TO-RESOURCE-MAPPING>
    <SHORT-NAME>Res_Map_OsProxyOsT_50ms</SHORT-
      NAME>
    <DESC>
      <L-2 L="EN">Software Cluster resource
        mapping OsTask_50ms for the complete ECU
        </L-2>
    </DESC>
    <PROVIDER-REF DEST="CP-SOFTWARE-CLUSTER">/
      AUTOSAR/CONC_670/PCFG_SYS/
      CpSoftwareClusters/SwClu_Host</PROVIDER-
      REF>
    <REQUESTER-REFS>
      <REQUESTER-REF DEST="CP-SOFTWARE-CLUSTER">/
        AUTOSAR/CONC_670/PCFG_SYS/
        CpSoftwareClusters/SwClu_AHB</REQUESTER-
        REF>
    </REQUESTER-REFS>
    <SERVICE-RESOURCE-REF DEST="CP-SOFTWARE-
      CLUSTER-SERVICE-RESOURCE">/AUTOSAR/
      CONC_670/SysResPool/
      CpSoftwareClusterResourcePools/
      OsResourcePool/OsProxyOsT_50ms</SERVICE-
      RESOURCE-REF>
  </CP-SOFTWARE-CLUSTER-TO-RESOURCE-MAPPING>
  <CP-SOFTWARE-CLUSTER-TO-RESOURCE-MAPPING>
    <SHORT-NAME>Res_Map_OsProxyOsT_10ms_Ph1</
      SHORT-NAME>
    <DESC>
```

```
        <L-2 L="EN">Software Cluster resource
          mapping OsTask_10ms for the complete ECU
          </L-2>
      </DESC>
      <PROVIDER-REF DEST="CP-SOFTWARE-CLUSTER">/
        AUTOSAR/CONC_670/PCFG_SYS/
        CpSoftwareClusters/SwClu_Host</PROVIDER-
        REF>
      <REQUESTER-REFS>
        <REQUESTER-REF DEST="CP-SOFTWARE-CLUSTER">/
          AUTOSAR/CONC_670/PCFG_SYS/
          CpSoftwareClusters/SwClu_AHB</REQUESTER-
          REF>
      </REQUESTER-REFS>
      <SERVICE-RESOURCE-REF DEST="CP-SOFTWARE-
        CLUSTER-SERVICE-RESOURCE">/AUTOSAR/
        CONC_670/SysResPool/
        CpSoftwareClusterResourcePools/
        OsResourcePool/OsProxyOsT_10ms_Ph1</
        SERVICE-RESOURCE-REF>
    </CP-SOFTWARE-CLUSTER-TO-RESOURCE-MAPPING>
    <CP-SOFTWARE-CLUSTER-TO-RESOURCE-MAPPING>
      <SHORT-NAME>Res_Map_OsProxyOsT_10ms_Ph2</
        SHORT-NAME>
      <DESC>
        <L-2 L="EN">Software Cluster resource
          mapping OsTask_10ms for the complete ECU
          </L-2>
      </DESC>
      <PROVIDER-REF DEST="CP-SOFTWARE-CLUSTER">/
        AUTOSAR/CONC_670/PCFG_SYS/
        CpSoftwareClusters/SwClu_Host</PROVIDER-
        REF>
      <REQUESTER-REFS>
        <REQUESTER-REF DEST="CP-SOFTWARE-CLUSTER">/
          AUTOSAR/CONC_670/PCFG_SYS/
          CpSoftwareClusters/SwClu_AHB</REQUESTER-
          REF>
      </REQUESTER-REFS>
      <SERVICE-RESOURCE-REF DEST="CP-SOFTWARE-
        CLUSTER-SERVICE-RESOURCE">/AUTOSAR/
        CONC_670/SysResPool/
        CpSoftwareClusterResourcePools/
        OsResourcePool/OsProxyOsT_10ms_Ph2</
        SERVICE-RESOURCE-REF>
    </CP-SOFTWARE-CLUSTER-TO-RESOURCE-MAPPING>
  </SOFTWARE-CLUSTER-TO-RESOURCE-MAPPINGS>
  <SW-CLUSTER-MAPPINGS>
    <CP-SOFTWARE-CLUSTER-TO-ECU-INSTANCE-MAPPING>
      <SHORT-NAME>
        CpSoftwareClusterToEcuInstanceMapping_0</
        SHORT-NAME>
      <ECU-INSTANCE-REF DEST="ECU-INSTANCE">/
        AUTOSAR/CONC_670/PCFG_SYS/EcuInstances/
        Machine_Host_AHB</ECU-INSTANCE-REF>
      <SW-CLUSTERS>
```

```
            <CP-SOFTWARE-CLUSTER-REF-CONDITIONAL>
              <CP-SOFTWARE-CLUSTER-REF DEST="CP-
                  SOFTWARE-CLUSTER">/AUTOSAR/CONC_670/
                  PCFG_SYS/CpSoftwareClusters/SwClu_Host
                  </CP-SOFTWARE-CLUSTER-REF>
            </CP-SOFTWARE-CLUSTER-REF-CONDITIONAL>
            <CP-SOFTWARE-CLUSTER-REF-CONDITIONAL>
              <CP-SOFTWARE-CLUSTER-REF DEST="CP-
                  SOFTWARE-CLUSTER">/AUTOSAR/CONC_670/
                  PCFG_SYS/CpSoftwareClusters/SwClu_AHB<
                  /CP-SOFTWARE-CLUSTER-REF>
            </CP-SOFTWARE-CLUSTER-REF-CONDITIONAL>
          </SW-CLUSTERS>
        </CP-SOFTWARE-CLUSTER-TO-ECU-INSTANCE-MAPPING>
      </SW-CLUSTER-MAPPINGS>
      <SW-MAPPINGS>
        <SWC-TO-ECU-MAPPING>
          <SHORT-NAME>SWC_TopLvl_Map</SHORT-NAME>
          <COMPONENT-IREFS>
            <COMPONENT-IREF>
              <CONTEXT-COMPOSITION-REF DEST="ROOT-SW-
                  COMPOSITION-PROTOTYPE">/AUTOSAR/
                  CONC_670/PCT_TopLvl/Systems/
                  System_TopLvl/Sys_TopLvl</CONTEXT-
                  COMPOSITION-REF>
              <TARGET-COMPONENT-REF DEST="SW-COMPONENT-
                  PROTOTYPE">/AUTOSAR/CONC_670/
                  PCT_TopLvl/SwComponentTypes/TopLvl/
                  CPT_SwcCompoHost</TARGET-COMPONENT-REF
                  >
            </COMPONENT-IREF>
            <COMPONENT-IREF>
              <CONTEXT-COMPOSITION-REF DEST="ROOT-SW-
                  COMPOSITION-PROTOTYPE">/AUTOSAR/
                  CONC_670/PCT_TopLvl/Systems/
                  System_TopLvl/Sys_TopLvl</CONTEXT-
                  COMPOSITION-REF>
              <TARGET-COMPONENT-REF DEST="SW-COMPONENT-
                  PROTOTYPE">/AUTOSAR/CONC_670/
                  PCT_TopLvl/SwComponentTypes/TopLvl/
                  CPT_SwcCompoAHB</TARGET-COMPONENT-REF>
            </COMPONENT-IREF>
          </COMPONENT-IREFS>
          <ECU-INSTANCE-REF DEST="ECU-INSTANCE">/
              AUTOSAR/CONC_670/PCFG_SYS/EcuInstances/
              Machine_Host_AHB</ECU-INSTANCE-REF>
        </SWC-TO-ECU-MAPPING>
      </SW-MAPPINGS>
    </SYSTEM-MAPPING>
  </MAPPINGS>
  <ROOT-SOFTWARE-COMPOSITIONS>
    <ROOT-SW-COMPOSITION-PROTOTYPE>
      <SHORT-NAME>Sys_TopLvl</SHORT-NAME>
```

```
                    <SOFTWARE-COMPOSITION-TREF DEST="COMPOSITION-SW-
                        COMPONENT-TYPE">/AUTOSAR/CONC_670/PCT_TopLvl/
                        SwComponentTypes/TopLvl</SOFTWARE-COMPOSITION-
                        TREF>
                  </ROOT-SW-COMPOSITION-PROTOTYPE>
                </ROOT-SOFTWARE-COMPOSITIONS>
                <SW-CLUSTERS>
                  <CP-SOFTWARE-CLUSTER-REF-CONDITIONAL>
                    <CP-SOFTWARE-CLUSTER-REF DEST="CP-SOFTWARE-
                        CLUSTER">/AUTOSAR/CONC_670/PCFG_SYS/
                        CpSoftwareClusters/SwClu_Host</CP-SOFTWARE-
                        CLUSTER-REF>
                  </CP-SOFTWARE-CLUSTER-REF-CONDITIONAL>
                  <CP-SOFTWARE-CLUSTER-REF-CONDITIONAL>
                    <CP-SOFTWARE-CLUSTER-REF DEST="CP-SOFTWARE-
                        CLUSTER">/AUTOSAR/CONC_670/PCFG_SYS/
                        CpSoftwareClusters/SwClu_AHB</CP-SOFTWARE-
                        CLUSTER-REF>
                  </CP-SOFTWARE-CLUSTER-REF-CONDITIONAL>
                </SW-CLUSTERS>
                <SYSTEM-VERSION>1.0.0</SYSTEM-VERSION>
              </SYSTEM>
            </ELEMENTS>
          </AR-PACKAGE>
        </AR-PACKAGES>
      </AR-PACKAGE>
    </AR-PACKAGES>
  </AR-PACKAGE>
</AR-PACKAGES>
</AUTOSAR>
```

Listing A.10: DOC_SwCluC_Sys_Descr_TopLvl.arxml

A.2.6 DOC_SwCluC_Sys_HWT.arxml

```
<AUTOSAR xmlns="http://autosar.org/schema/r4.0" xmlns:xsi="http://www.w3.
    org/2001/XMLSchema-instance" xsi:schemaLocation="http://autosar.org/
    schema/r4.0 AUTOSAR_00055.xsd">
  <AR-PACKAGES>
    <AR-PACKAGE>
      <SHORT-NAME>AUTOSAR</SHORT-NAME>
      <AR-PACKAGES>
        <AR-PACKAGE>
          <SHORT-NAME>CONC_670</SHORT-NAME>
          <AR-PACKAGES>
            <AR-PACKAGE>
              <SHORT-NAME>PCFG_SYS</SHORT-NAME>
              <AR-PACKAGES>
                <AR-PACKAGE>
                  <SHORT-NAME>EcuInstances</SHORT-NAME>
```

```
                    <ELEMENTS>
                      <ECU-INSTANCE>
                        <SHORT-NAME>Machine_Host_AHB</SHORT-NAME>
                      </ECU-INSTANCE>
                    </ELEMENTS>
                  </AR-PACKAGE>
                </AR-PACKAGES>
              </AR-PACKAGE>
            </AR-PACKAGES>
          </AR-PACKAGE>
        </AR-PACKAGES>
      </AR-PACKAGE>
    </AR-PACKAGES>
</AUTOSAR>
```

Listing A.11: DOC_SwCluC_Sys_HWT.arxml

A.2.7 DOC_SwCluC_Sys_ResPoolCommunicationResources.arxml

```
<AUTOSAR xmlns="http://autosar.org/schema/r4.0" xmlns:xsi="http://www.w3.
    org/2001/XMLSchema-instance" xsi:schemaLocation="http://autosar.org/
    schema/r4.0 AUTOSAR_00055.xsd">
  <AR-PACKAGES>
    <AR-PACKAGE>
      <SHORT-NAME>AUTOSAR</SHORT-NAME>
      <AR-PACKAGES>
        <AR-PACKAGE>
          <SHORT-NAME>CONC_670</SHORT-NAME>
          <AR-PACKAGES>
            <AR-PACKAGE>
              <SHORT-NAME>SysResPool</SHORT-NAME>
              <AR-PACKAGES>
                <AR-PACKAGE>
                  <SHORT-NAME>CpSoftwareClusterResourcePools</SHORT-NAME>
                  <ELEMENTS>
                    <CP-SOFTWARE-CLUSTER-RESOURCE-POOL>
                      <SHORT-NAME>ComResourcePool</SHORT-NAME>
                      <RESOURCES>
                        <CP-SOFTWARE-CLUSTER-COMMUNICATION-RESOURCE>
                          <SHORT-NAME>Anton</SHORT-NAME>
                          <GLOBAL-RESOURCE-ID>0xda1a0001</GLOBAL-RESOURCE-
                              ID>
                          <IS-MANDATORY>false</IS-MANDATORY>
                          <COMMUNICATION-RESOURCE-PROPS>
                            <DATA-COM-PROPS>
                              <SEND-INDICATION>NONE</SEND-INDICATION>
                            </DATA-COM-PROPS>
                          </COMMUNICATION-RESOURCE-PROPS>
                        </CP-SOFTWARE-CLUSTER-COMMUNICATION-RESOURCE>
                        <CP-SOFTWARE-CLUSTER-COMMUNICATION-RESOURCE>
                          <SHORT-NAME>Bernd</SHORT-NAME>
```

```
                    <GLOBAL-RESOURCE-ID>0xda1a0002</GLOBAL-RESOURCE-
                        ID>
                    <IS-MANDATORY>false</IS-MANDATORY>
                    <COMMUNICATION-RESOURCE-PROPS>
                      <DATA-COM-PROPS>
                        <SEND-INDICATION>NONE</SEND-INDICATION>
                      </DATA-COM-PROPS>
                    </COMMUNICATION-RESOURCE-PROPS>
                  </CP-SOFTWARE-CLUSTER-COMMUNICATION-RESOURCE>
                  <CP-SOFTWARE-CLUSTER-COMMUNICATION-RESOURCE>
                    <SHORT-NAME>Celine</SHORT-NAME>
                    <GLOBAL-RESOURCE-ID>0xda1a0003</GLOBAL-RESOURCE-
                        ID>
                    <IS-MANDATORY>false</IS-MANDATORY>
                    <COMMUNICATION-RESOURCE-PROPS>
                      <DATA-COM-PROPS>
                        <SEND-INDICATION>NONE</SEND-INDICATION>
                      </DATA-COM-PROPS>
                    </COMMUNICATION-RESOURCE-PROPS>
                  </CP-SOFTWARE-CLUSTER-COMMUNICATION-RESOURCE>
                  <CP-SOFTWARE-CLUSTER-COMMUNICATION-RESOURCE>
                    <SHORT-NAME>Hugo</SHORT-NAME>
                    <GLOBAL-RESOURCE-ID>0xda1a0004</GLOBAL-RESOURCE-
                        ID>
                    <IS-MANDATORY>false</IS-MANDATORY>
                    <COMMUNICATION-RESOURCE-PROPS>
                      <DATA-COM-PROPS>
                        <SEND-INDICATION>NONE</SEND-INDICATION>
                      </DATA-COM-PROPS>
                    </COMMUNICATION-RESOURCE-PROPS>
                  </CP-SOFTWARE-CLUSTER-COMMUNICATION-RESOURCE>
                </RESOURCES>
              </CP-SOFTWARE-CLUSTER-RESOURCE-POOL>
            </ELEMENTS>
          </AR-PACKAGE>
        </AR-PACKAGES>
      </AR-PACKAGE>
    </AR-PACKAGES>
  </AR-PACKAGE>
</AR-PACKAGES>
</AUTOSAR>
```

Listing A.12: DOC_SwCluC_Sys_ResPoolCommunicationResources.arxml

A.2.8 DOC_SwCluC_Sys_ResPoolServiceResources.arxml

```
<AUTOSAR xmlns="http://autosar.org/schema/r4.0" xmlns:xsi="http://www.w3.
    org/2001/XMLSchema-instance" xsi:schemaLocation="http://autosar.org/
    schema/r4.0 AUTOSAR_00055.xsd">
  <AR-PACKAGES>
```

```
<AR-PACKAGE>
  <SHORT-NAME>AUTOSAR</SHORT-NAME>
  <AR-PACKAGES>
    <AR-PACKAGE>
      <SHORT-NAME>CONC_670</SHORT-NAME>
      <AR-PACKAGES>
        <AR-PACKAGE>
          <SHORT-NAME>SysResPool</SHORT-NAME>
          <AR-PACKAGES>
            <AR-PACKAGE>
              <SHORT-NAME>CpSoftwareClusterResourcePools</SHORT-NAME>
              <ELEMENTS>
                <CP-SOFTWARE-CLUSTER-RESOURCE-POOL>
                  <SHORT-NAME>OsResourcePool</SHORT-NAME>
                  <RESOURCES>
                    <CP-SOFTWARE-CLUSTER-SERVICE-RESOURCE>
                      <SHORT-NAME>OsBaseSocket_AHB</SHORT-NAME>
                      <DESC>
                        <L-2 L="EN">OsTask resource according
                          SWS_SwCluC_90002</L-2>
                      </DESC>
                      <CATEGORY>SWCLUSTER_RES_OS_BASE_SOCKET</CATEGORY>
                      <GLOBAL-RESOURCE-ID>0x05000000</GLOBAL-RESOURCE-
                        ID>
                      <IS-MANDATORY>true</IS-MANDATORY>
                    </CP-SOFTWARE-CLUSTER-SERVICE-RESOURCE>
                    <CP-SOFTWARE-CLUSTER-SERVICE-RESOURCE>
                      <SHORT-NAME>OsProxyOsT_10ms_Ph1</SHORT-NAME>
                      <DESC>
                        <L-2 L="EN">OsTask resource according
                          SWS_SwCluC_90004</L-2>
                      </DESC>
                      <CATEGORY>SWCLUSTER_RES_OS_TASK</CATEGORY>
                      <GLOBAL-RESOURCE-ID>0x05000005</GLOBAL-RESOURCE-
                        ID>
                      <IS-MANDATORY>true</IS-MANDATORY>
                      <RESOURCE-NEEDS-REFS>
                        <RESOURCE-NEEDS-REF DEST="ECUC-CONTAINER-VALUE"
                          >/AUTOSAR/CONC_670/SysResPool/
                          EcucModuleConfigurationValuess/
                          OsResourceNeeds/OsProxyOsT_10ms_Ph2</
                          RESOURCE-NEEDS-REF>
                      </RESOURCE-NEEDS-REFS>
                    </CP-SOFTWARE-CLUSTER-SERVICE-RESOURCE>
                    <CP-SOFTWARE-CLUSTER-SERVICE-RESOURCE>
                      <SHORT-NAME>OsProxyOsT_10ms_Ph2</SHORT-NAME>
                      <DESC>
                        <L-2 L="EN">OsTask resource according
                          SWS_SwCluC_90004</L-2>
                      </DESC>
                      <CATEGORY>SWCLUSTER_RES_OS_TASK</CATEGORY>
                      <GLOBAL-RESOURCE-ID>0x05000004</GLOBAL-RESOURCE-
                        ID>
                      <IS-MANDATORY>true</IS-MANDATORY>
                      <RESOURCE-NEEDS-REFS>
```

```
            <RESOURCE-NEEDS-REF DEST="ECUC-CONTAINER-VALUE"
                >/AUTOSAR/CONC_670/SysResPool/
                EcucModuleConfigurationValuess/
                OsResourceNeeds/OsProxyOsT_10ms_Ph2</
                RESOURCE-NEEDS-REF>
          </RESOURCE-NEEDS-REFS>
        </CP-SOFTWARE-CLUSTER-SERVICE-RESOURCE>
        <CP-SOFTWARE-CLUSTER-SERVICE-RESOURCE>
          <SHORT-NAME>OsProxyOsT_50ms</SHORT-NAME>
          <DESC>
            <L-2 L="EN">OsTask resource according
                SWS_SwCluC_90004</L-2>
          </DESC>
          <CATEGORY>SWCLUSTER_RES_OS_TASK</CATEGORY>
          <GLOBAL-RESOURCE-ID>0x05000003</GLOBAL-RESOURCE-
              ID>
          <IS-MANDATORY>true</IS-MANDATORY>
          <RESOURCE-NEEDS-REFS>
            <RESOURCE-NEEDS-REF DEST="ECUC-CONTAINER-VALUE"
                >/AUTOSAR/CONC_670/SysResPool/
                EcucModuleConfigurationValuess/
                OsResourceNeeds/OsProxyOsT_50ms</RESOURCE-
                NEEDS-REF>
          </RESOURCE-NEEDS-REFS>
        </CP-SOFTWARE-CLUSTER-SERVICE-RESOURCE>
      </RESOURCES>
    </CP-SOFTWARE-CLUSTER-RESOURCE-POOL>
    <CP-SOFTWARE-CLUSTER-RESOURCE-POOL>
      <SHORT-NAME>SwClusCResourcePool</SHORT-NAME>
      <RESOURCES>
        <CP-SOFTWARE-CLUSTER-SERVICE-RESOURCE>
          <SHORT-NAME>BaseConfigCheck_AHB</SHORT-NAME>
          <DESC>
            <L-2 L="EN">Base Configuration Check for AHB
                according SWS_SwCluC_90000</L-2>
          </DESC>
          <CATEGORY>SWCLUSTER_RES_BASE_CNF</CATEGORY>
          <GLOBAL-RESOURCE-ID>0xba5e0001</GLOBAL-RESOURCE-
              ID>
          <IS-MANDATORY>true</IS-MANDATORY>
        </CP-SOFTWARE-CLUSTER-SERVICE-RESOURCE>
        <CP-SOFTWARE-CLUSTER-SERVICE-RESOURCE>
          <SHORT-NAME>XccBaseSocket_AHB</SHORT-NAME>
          <DESC>
            <L-2 L="EN">Xcc Base Socket for AHB according
                SWS_SwCluC_90008</L-2>
          </DESC>
          <CATEGORY>SWCLUSTER_RES_XCC_BASE_SOCKET</CATEGORY
              >
          <GLOBAL-RESOURCE-ID>0xba5e0002</GLOBAL-RESOURCE-
              ID>
          <IS-MANDATORY>true</IS-MANDATORY>
        </CP-SOFTWARE-CLUSTER-SERVICE-RESOURCE>
        <CP-SOFTWARE-CLUSTER-SERVICE-RESOURCE>
          <SHORT-NAME>OsBaseConfigCheck_AHB</SHORT-NAME>
          <DESC>
```

```
                    <L-2 L="EN">Base Configuration Check for AHB
                        OsProxy according SWS_SwCluC_90000</L-2>
                  </DESC>
                  <CATEGORY>SWCLUSTER_RES_BASE_CNF</CATEGORY>
                  <GLOBAL-RESOURCE-ID>0xba5e0003</GLOBAL-RESOURCE-
                      ID>
                  <IS-MANDATORY>true</IS-MANDATORY>
                </CP-SOFTWARE-CLUSTER-SERVICE-RESOURCE>
              </RESOURCES>
            </CP-SOFTWARE-CLUSTER-RESOURCE-POOL>
          </ELEMENTS>
        </AR-PACKAGE>
      </AR-PACKAGES>
    </AR-PACKAGE>
  </AR-PACKAGES>
</AUTOSAR>
```

Listing A.13: DOC_SwCluC_Sys_ResPoolServiceResources.arxml

A.2.9 DOC_SwCluC_Sys_ResPoolServiceResourceNeeds.arxml

```
<AUTOSAR xmlns="http://autosar.org/schema/r4.0" xmlns:xsi="http://www.w3.
    org/2001/XMLSchema-instance" xsi:schemaLocation="http://autosar.org/
    schema/r4.0 AUTOSAR_00055.xsd">
  <AR-PACKAGES>
    <AR-PACKAGE>
      <SHORT-NAME>AUTOSAR</SHORT-NAME>
      <AR-PACKAGES>
        <AR-PACKAGE>
          <SHORT-NAME>CONC_670</SHORT-NAME>
          <AR-PACKAGES>
            <AR-PACKAGE>
              <SHORT-NAME>SysResPool</SHORT-NAME>
              <AR-PACKAGES>
                <AR-PACKAGE>
                  <SHORT-NAME>EcucModuleConfigurationValuess</SHORT-NAME>
                  <ELEMENTS>
                    <ECUC-MODULE-CONFIGURATION-VALUES>
                      <SHORT-NAME>OsResourceNeeds</SHORT-NAME>
                      <DEFINITION-REF DEST="ECUC-MODULE-DEF">/AUTOSAR/
                          EcucDefs/Os</DEFINITION-REF>
                      <ECUC-DEF-EDITION>1.0.0</ECUC-DEF-EDITION>
                      <CONTAINERS>
                        <ECUC-CONTAINER-VALUE>
                          <SHORT-NAME>OsProxyOsT_10ms_Ph1</SHORT-NAME>
```

```
      <DEFINITION-REF DEST="ECUC-PARAM-CONF-CONTAINER-
          DEF">/AUTOSAR/EcucDefs/SwCluC/SwCluCProxies/
          SwCluCOsProxy/SwCluCOsProxyOsTask</DEFINITION-
          REF>
      <PARAMETER-VALUES>
        <ECUC-NUMERICAL-PARAM-VALUE>
          <DEFINITION-REF DEST="ECUC-INTEGER-PARAM-DEF"
              >/AUTOSAR/EcucDefs/Os/OsTask/
              OsTaskPriority</DEFINITION-REF>
          <VALUE>1</VALUE>
        </ECUC-NUMERICAL-PARAM-VALUE>
        <ECUC-TEXTUAL-PARAM-VALUE>
          <DEFINITION-REF DEST="ECUC-ENUMERATION-PARAM-
              DEF">/AUTOSAR/EcucDefs/Os/OsTask/
              OsTaskSchedule</DEFINITION-REF>
          <VALUE>FULL</VALUE>
        </ECUC-TEXTUAL-PARAM-VALUE>
      </PARAMETER-VALUES>
    </ECUC-CONTAINER-VALUE>
    <ECUC-CONTAINER-VALUE>
      <SHORT-NAME>OsProxyOsT_10ms_Ph2</SHORT-NAME>
      <DEFINITION-REF DEST="ECUC-PARAM-CONF-CONTAINER-
          DEF">/AUTOSAR/EcucDefs/SwCluC/SwCluCProxies/
          SwCluCOsProxy/SwCluCOsProxyOsTask</DEFINITION-
          REF>
      <PARAMETER-VALUES>
        <ECUC-NUMERICAL-PARAM-VALUE>
          <DEFINITION-REF DEST="ECUC-INTEGER-PARAM-DEF"
              >/AUTOSAR/EcucDefs/Os/OsTask/
              OsTaskPriority</DEFINITION-REF>
          <VALUE>5</VALUE>
        </ECUC-NUMERICAL-PARAM-VALUE>
        <ECUC-TEXTUAL-PARAM-VALUE>
          <DEFINITION-REF DEST="ECUC-ENUMERATION-PARAM-
              DEF">/AUTOSAR/EcucDefs/Os/OsTask/
              OsTaskSchedule</DEFINITION-REF>
          <VALUE>FULL</VALUE>
        </ECUC-TEXTUAL-PARAM-VALUE>
      </PARAMETER-VALUES>
    </ECUC-CONTAINER-VALUE>
    <ECUC-CONTAINER-VALUE>
      <SHORT-NAME>OsProxyOsT_50ms</SHORT-NAME>
      <DEFINITION-REF DEST="ECUC-PARAM-CONF-CONTAINER-
          DEF">/AUTOSAR/EcucDefs/SwCluC/SwCluCProxies/
          SwCluCOsProxy/SwCluCOsProxyOsTask</DEFINITION-
          REF>
      <PARAMETER-VALUES>
        <ECUC-NUMERICAL-PARAM-VALUE>
          <DEFINITION-REF DEST="ECUC-INTEGER-PARAM-DEF"
              >/AUTOSAR/EcucDefs/Os/OsTask/
              OsTaskPriority</DEFINITION-REF>
          <VALUE>50</VALUE>
        </ECUC-NUMERICAL-PARAM-VALUE>
        <ECUC-TEXTUAL-PARAM-VALUE>
```

```
                                <DEFINITION-REF DEST="ECUC-ENUMERATION-PARAM-
                                    DEF">/AUTOSAR/EcucDefs/Os/OsTask/
                                    OsTaskSchedule</DEFINITION-REF>
                                <VALUE>FULL</VALUE>
                              </ECUC-TEXTUAL-PARAM-VALUE>
                            </PARAMETER-VALUES>
                          </ECUC-CONTAINER-VALUE>
                        </CONTAINERS>
                      </ECUC-MODULE-CONFIGURATION-VALUES>
                    </ELEMENTS>
                  </AR-PACKAGE>
                </AR-PACKAGES>
              </AR-PACKAGE>
            </AR-PACKAGES>
          </AR-PACKAGE>
        </AR-PACKAGES>
      </AR-PACKAGE>
    </AR-PACKAGES>
</AUTOSAR>
```

Listing A.14: DOC_SwCluC_Sys_ResPoolServiceResourceNeeds.arxml

A.2.10 DOC_SwCluC_Sys_Extr_Host.arxml

```
<AUTOSAR xmlns="http://autosar.org/schema/r4.0"
  xmlns:xsi="http://www.w3.org/2001/XMLSchema-instance" xsi:schemaLocation=
      "http://autosar.org/schema/r4.0 AUTOSAR_00055.xsd">
  <ADMIN-DATA>
    <USED-LANGUAGES></USED-LANGUAGES>
  </ADMIN-DATA>
  <AR-PACKAGES>
    <AR-PACKAGE>
      <SHORT-NAME>AUTOSAR</SHORT-NAME>
      <AR-PACKAGES>
        <AR-PACKAGE>
          <SHORT-NAME>CONC_670</SHORT-NAME>
          <AR-PACKAGES>
            <AR-PACKAGE>
              <SHORT-NAME>PCFG_SYS</SHORT-NAME>
              <AR-PACKAGES>
                <AR-PACKAGE>
                  <SHORT-NAME>Systems</SHORT-NAME>
                  <ELEMENTS>
                    <SYSTEM>
                      <SHORT-NAME>System_Host</SHORT-NAME>
                      <CATEGORY>SW_CLUSTER_SYSTEM_DESCRIPTION</CATEGORY>
                      <MAPPINGS>
                        <SYSTEM-MAPPING>
                          <SHORT-NAME>Sys_Host_Maps</SHORT-NAME>
                          <PORT-ELEMENT-TO-COM-RESOURCE-MAPPINGS>
                            <PORT-ELEMENT-TO-COMMUNICATION-RESOURCE-MAPPING
                                >
```

```
<SHORT-NAME>Res_Map_DE_Bernd</SHORT-NAME>
<COMMUNICATION-RESOURCE-REF DEST="CP-SOFTWARE
    -CLUSTER-COMMUNICATION-RESOURCE">/AUTOSAR/
    CONC_670/SysResPool/
    CpSoftwareClusterResourcePools/
    ComResourcePool/Bernd</COMMUNICATION-
    RESOURCE-REF>
<VARIABLE-DATA-PROTOTYPE-IREF>
  <CONTEXT-COMPONENT-REF DEST="SW-COMPONENT-
      PROTOTYPE">/AUTOSAR/CONC_670/PCT_TopLvl/
      SwComponentTypes/TopLvl/CPT_SwcCompoHost
      </CONTEXT-COMPONENT-REF>
  <CONTEXT-COMPOSITION-REF DEST="ROOT-SW-
      COMPOSITION-PROTOTYPE">/AUTOSAR/CONC_670
      /PCFG_SYS/Systems/System_Host/
      Sys_SWCluster_Host</CONTEXT-COMPOSITION-
      REF>
  <CONTEXT-PORT-REF DEST="R-PORT-PROTOTYPE">/
      AUTOSAR/CONC_670/SwcCompoHost/
      SwComponentTypes/SwcCompoHost/RP_Bernd</
      CONTEXT-PORT-REF>
  <TARGET-DATA-PROTOTYPE-REF DEST="VARIABLE-
      DATA-PROTOTYPE">/AUTOSAR/CONC_670/
      SwcCompoHost/PortInterfaces/IF_Bernd/
      Bernd</TARGET-DATA-PROTOTYPE-REF>
</VARIABLE-DATA-PROTOTYPE-IREF>
</PORT-ELEMENT-TO-COMMUNICATION-RESOURCE-
    MAPPING>
<PORT-ELEMENT-TO-COMMUNICATION-RESOURCE-MAPPING
    >
<SHORT-NAME>Res_Map_DE_Celine</SHORT-NAME>
<COMMUNICATION-RESOURCE-REF DEST="CP-SOFTWARE
    -CLUSTER-COMMUNICATION-RESOURCE">/AUTOSAR/
    CONC_670/SysResPool/
    CpSoftwareClusterResourcePools/
    ComResourcePool/Celine</COMMUNICATION-
    RESOURCE-REF>
<VARIABLE-DATA-PROTOTYPE-IREF>
  <CONTEXT-COMPONENT-REF DEST="SW-COMPONENT-
      PROTOTYPE">/AUTOSAR/CONC_670/PCT_TopLvl/
      SwComponentTypes/TopLvl/CPT_SwcCompoHost
      </CONTEXT-COMPONENT-REF>
  <CONTEXT-COMPOSITION-REF DEST="ROOT-SW-
      COMPOSITION-PROTOTYPE">/AUTOSAR/CONC_670
      /PCFG_SYS/Systems/System_Host/
      Sys_SWCluster_Host</CONTEXT-COMPOSITION-
      REF>
  <CONTEXT-PORT-REF DEST="P-PORT-PROTOTYPE">/
      AUTOSAR/CONC_670/SwcCompoHost/
      SwComponentTypes/SwcCompoHost/PP_Celine<
      /CONTEXT-PORT-REF>
  <TARGET-DATA-PROTOTYPE-REF DEST="VARIABLE-
      DATA-PROTOTYPE">/AUTOSAR/CONC_670/
      SwcCompoHost/PortInterfaces/IF_Celine/
      Celine</TARGET-DATA-PROTOTYPE-REF>
</VARIABLE-DATA-PROTOTYPE-IREF>
```

```
</PORT-ELEMENT-TO-COMMUNICATION-RESOURCE-
    MAPPING>
<PORT-ELEMENT-TO-COMMUNICATION-RESOURCE-MAPPING
    >
  <SHORT-NAME>Res_Map_DE_Hugo</SHORT-NAME>
  <COMMUNICATION-RESOURCE-REF DEST="CP-SOFTWARE
      -CLUSTER-COMMUNICATION-RESOURCE">/AUTOSAR/
      CONC_670/SysResPool/
      CpSoftwareClusterResourcePools/
      ComResourcePool/Celine</COMMUNICATION-
      RESOURCE-REF>
  <VARIABLE-DATA-PROTOTYPE-IREF>
    <CONTEXT-COMPONENT-REF DEST="SW-COMPONENT-
        PROTOTYPE">/AUTOSAR/CONC_670/PCT_TopLvl/
        SwComponentTypes/TopLvl/CPT_SwcCompoHost
        </CONTEXT-COMPONENT-REF>
    <CONTEXT-COMPOSITION-REF DEST="ROOT-SW-
        COMPOSITION-PROTOTYPE">/AUTOSAR/CONC_670
        /PCFG_SYS/Systems/System_Host/
        Sys_SWCluster_Host</CONTEXT-COMPOSITION-
        REF>
    <CONTEXT-PORT-REF DEST="R-PORT-PROTOTYPE">/
        AUTOSAR/CONC_670/SwcCompoHost/
        SwComponentTypes/SwcCompoHost/RP_Hugo</
        CONTEXT-PORT-REF>
    <TARGET-DATA-PROTOTYPE-REF DEST="VARIABLE-
        DATA-PROTOTYPE">/AUTOSAR/CONC_670/
        SwcCompoHost/PortInterfaces/IF_Hugo/Hugo
        </TARGET-DATA-PROTOTYPE-REF>
  </VARIABLE-DATA-PROTOTYPE-IREF>
</PORT-ELEMENT-TO-COMMUNICATION-RESOURCE-
    MAPPING>
</PORT-ELEMENT-TO-COM-RESOURCE-MAPPINGS>
<SOFTWARE-CLUSTER-TO-RESOURCE-MAPPINGS>
  <CP-SOFTWARE-CLUSTER-TO-RESOURCE-MAPPING>
    <SHORT-NAME>Res_Map_BaseConfigCheck_AHB</
        SHORT-NAME>
    <DESC>
      <L-2 L="EN">Software Cluster resource
          mapping Base Config Check AHB for the
          complete ECU</L-2>
    </DESC>
    <PROVIDER-REF DEST="CP-SOFTWARE-CLUSTER">/
        AUTOSAR/CONC_670/PCFG_SYS/
        CpSoftwareClusters/SwClu_Host</PROVIDER-
        REF>
    <SERVICE-RESOURCE-REF DEST="CP-SOFTWARE-
        CLUSTER-SERVICE-RESOURCE">/AUTOSAR/
        CONC_670/SysResPool/
        CpSoftwareClusterResourcePools/
        SwClusCResourcePool/BaseConfigCheck_AHB</
        SERVICE-RESOURCE-REF>
  </CP-SOFTWARE-CLUSTER-TO-RESOURCE-MAPPING>
  <CP-SOFTWARE-CLUSTER-TO-RESOURCE-MAPPING>
    <SHORT-NAME>Res_Map_XccBaseSocket_AHB</SHORT-
        NAME>
```

```
    <DESC>
      <L-2 L="EN">Software Cluster resource
          mapping Xcc Base Socket AHB for the
          complete ECU</L-2>
    </DESC>
    <PROVIDER-REF DEST="CP-SOFTWARE-CLUSTER">/
        AUTOSAR/CONC_670/PCFG_SYS/
        CpSoftwareClusters/SwClu_Host</PROVIDER-
        REF>
    <SERVICE-RESOURCE-REF DEST="CP-SOFTWARE-
        CLUSTER-SERVICE-RESOURCE">/AUTOSAR/
        CONC_670/SysResPool/
        CpSoftwareClusterResourcePools/
        SwClusCResourcePool/XccBaseSocket_AHB</
        SERVICE-RESOURCE-REF>
  </CP-SOFTWARE-CLUSTER-TO-RESOURCE-MAPPING>
  <CP-SOFTWARE-CLUSTER-TO-RESOURCE-MAPPING>
    <SHORT-NAME>Res_Map_OsBaseSocket_AHB</SHORT-
        NAME>
    <DESC>
      <L-2 L="EN">Software Cluster resource
          mapping Xcc Base Socket AHB for the
          complete ECU</L-2>
    </DESC>
    <PROVIDER-REF DEST="CP-SOFTWARE-CLUSTER">/
        AUTOSAR/CONC_670/PCFG_SYS/
        CpSoftwareClusters/SwClu_Host</PROVIDER-
        REF>
    <SERVICE-RESOURCE-REF DEST="CP-SOFTWARE-
        CLUSTER-SERVICE-RESOURCE">/AUTOSAR/
        CONC_670/SysResPool/
        CpSoftwareClusterResourcePools/
        OsResourcePool/OsBaseSocket_AHB</SERVICE-
        RESOURCE-REF>
  </CP-SOFTWARE-CLUSTER-TO-RESOURCE-MAPPING>
  <CP-SOFTWARE-CLUSTER-TO-RESOURCE-MAPPING>
    <SHORT-NAME>Res_Map_OsProxyOsT_50ms</SHORT-
        NAME>
    <DESC>
      <L-2 L="EN">Software Cluster resource
          mapping OsTask_50ms for the complete ECU
          </L-2>
    </DESC>
    <PROVIDER-REF DEST="CP-SOFTWARE-CLUSTER">/
        AUTOSAR/CONC_670/PCFG_SYS/
        CpSoftwareClusters/SwClu_Host</PROVIDER-
        REF>
    <SERVICE-RESOURCE-REF DEST="CP-SOFTWARE-
        CLUSTER-SERVICE-RESOURCE">/AUTOSAR/
        CONC_670/SysResPool/
        CpSoftwareClusterResourcePools/
        OsResourcePool/OsProxyOsT_50ms</SERVICE-
        RESOURCE-REF>
  </CP-SOFTWARE-CLUSTER-TO-RESOURCE-MAPPING>
  <CP-SOFTWARE-CLUSTER-TO-RESOURCE-MAPPING>
```

```
      <SHORT-NAME>Res_Map_OsProxyOsT_10ms_Ph1</
          SHORT-NAME>
        <DESC>
          <L-2 L="EN">Software Cluster resource
              mapping OsTask_10ms for the complete ECU
              </L-2>
        </DESC>
        <PROVIDER-REF DEST="CP-SOFTWARE-CLUSTER">/
            AUTOSAR/CONC_670/PCFG_SYS/
            CpSoftwareClusters/SwClu_Host</PROVIDER-
            REF>
        <SERVICE-RESOURCE-REF DEST="CP-SOFTWARE-
            CLUSTER-SERVICE-RESOURCE">/AUTOSAR/
            CONC_670/SysResPool/
            CpSoftwareClusterResourcePools/
            OsResourcePool/OsProxyOsT_10ms_Ph1</
            SERVICE-RESOURCE-REF>
      </CP-SOFTWARE-CLUSTER-TO-RESOURCE-MAPPING>
      <CP-SOFTWARE-CLUSTER-TO-RESOURCE-MAPPING>
        <SHORT-NAME>Res_Map_OsProxyOsT_10ms_Ph2</
            SHORT-NAME>
        <DESC>
          <L-2 L="EN">Software Cluster resource
              mapping Disp_50ms_Ph1 for the complete
              ECU</L-2>
        </DESC>
        <PROVIDER-REF DEST="CP-SOFTWARE-CLUSTER">/
            AUTOSAR/CONC_670/PCFG_SYS/
            CpSoftwareClusters/SwClu_Host</PROVIDER-
            REF>
        <SERVICE-RESOURCE-REF DEST="CP-SOFTWARE-
            CLUSTER-SERVICE-RESOURCE">/AUTOSAR/
            CONC_670/SysResPool/
            CpSoftwareClusterResourcePools/
            OsResourcePool/OsProxyOsT_10ms_Ph2</
            SERVICE-RESOURCE-REF>
      </CP-SOFTWARE-CLUSTER-TO-RESOURCE-MAPPING>
    </SOFTWARE-CLUSTER-TO-RESOURCE-MAPPINGS>
    <SW-MAPPINGS>
      <SWC-TO-ECU-MAPPING>
        <SHORT-NAME>SWC_Host_Map</SHORT-NAME>
        <COMPONENT-IREFS>
          <COMPONENT-IREF>
            <CONTEXT-COMPOSITION-REF DEST="ROOT-SW-
                COMPOSITION-PROTOTYPE">/AUTOSAR/
                CONC_670/PCFG_SYS/Systems/System/
                CPT_TopLvl</CONTEXT-COMPOSITION-REF>
            <TARGET-COMPONENT-REF DEST="SW-COMPONENT-
                PROTOTYPE">/AUTOSAR/CONC_670/
                PCT_TopLvl/SwComponentTypes/TopLvl/
                CPT_SwcCompoHost</TARGET-COMPONENT-REF
                >
          </COMPONENT-IREF>
        </COMPONENT-IREFS>
```

```
                        <ECU-INSTANCE-REF DEST="ECU-INSTANCE">/
                            AUTOSAR/CONC_670/PCFG_SYS/EcuInstances/
                            Machine_Host_AHB</ECU-INSTANCE-REF>
                      </SWC-TO-ECU-MAPPING>
                    </SW-MAPPINGS>
                  </SYSTEM-MAPPING>
                </MAPPINGS>
                <ROOT-SOFTWARE-COMPOSITIONS>
                  <ROOT-SW-COMPOSITION-PROTOTYPE>
                    <SHORT-NAME>Sys_SWCluster_Host</SHORT-NAME>
                    <SOFTWARE-COMPOSITION-TREF DEST="COMPOSITION-SW-
                        COMPONENT-TYPE">/AUTOSAR/CONC_670/PCT_TopLvl/
                        SwComponentTypes/TopLvl</SOFTWARE-COMPOSITION-
                        TREF>
                  </ROOT-SW-COMPOSITION-PROTOTYPE>
                </ROOT-SOFTWARE-COMPOSITIONS>
                <SW-CLUSTERS>
                  <CP-SOFTWARE-CLUSTER-REF-CONDITIONAL>
                    <CP-SOFTWARE-CLUSTER-REF DEST="CP-SOFTWARE-
                        CLUSTER">/AUTOSAR/CONC_670/PCFG_SYS/
                        CpSoftwareClusters/SwClu_Host</CP-SOFTWARE-
                        CLUSTER-REF>
                  </CP-SOFTWARE-CLUSTER-REF-CONDITIONAL>
                </SW-CLUSTERS>
              </SYSTEM>
            </ELEMENTS>
          </AR-PACKAGE>
        </AR-PACKAGES>
      </AR-PACKAGE>
    </AR-PACKAGES>
  </AR-PACKAGE>
</AR-PACKAGES>
</AUTOSAR>
```

Listing A.15: DOC_SwCluC_Sys_Extr_Host.arxml

A.2.11 DOC_SwCluC_Sys_Extr_TopLvl_SWCD_Host.arxml

```
<AUTOSAR xmlns="http://autosar.org/schema/r4.0" xmlns:xsi="http://www.w3.
    org/2001/XMLSchema-instance" xsi:schemaLocation="http://autosar.org/
    schema/r4.0 AUTOSAR_00055.xsd">
  <AR-PACKAGES>
    <AR-PACKAGE>
      <SHORT-NAME>AUTOSAR</SHORT-NAME>
      <AR-PACKAGES>
        <AR-PACKAGE>
          <SHORT-NAME>CONC_670</SHORT-NAME>
          <AR-PACKAGES>
            <AR-PACKAGE>
              <SHORT-NAME>PCT_TopLvl</SHORT-NAME>
```

```
            <AR-PACKAGES>
              <AR-PACKAGE>
                <SHORT-NAME>SwComponentTypes</SHORT-NAME>
                <ELEMENTS>
                  <COMPOSITION-SW-COMPONENT-TYPE>
                    <SHORT-NAME>TopLvl_BAK</SHORT-NAME>
                    <COMPONENTS>
                      <SW-COMPONENT-PROTOTYPE>
                        <SHORT-NAME>CPT_SwcCompoHost_BAK</SHORT-NAME>
                        <TYPE-TREF DEST="COMPOSITION-SW-COMPONENT-TYPE">/
                            AUTOSAR/CONC_670/SwcCompoHost/SwComponentTypes
                            /SwcCompoHost</TYPE-TREF>
                      </SW-COMPONENT-PROTOTYPE>
                    </COMPONENTS>
                  </COMPOSITION-SW-COMPONENT-TYPE>
                </ELEMENTS>
              </AR-PACKAGE>
            </AR-PACKAGES>
          </AR-PACKAGE>
        </AR-PACKAGES>
      </AR-PACKAGE>
    </AR-PACKAGES>
  </AR-PACKAGE>
</AUTOSAR>
```

Listing A.16: DOC_SwCluC_Sys_Extr_TopLvl_SWCD_Host.arxml

A.2.12 DOC_SwCluC_Sys_Extr_AHB.arxml

```
<AUTOSAR xmlns="http://autosar.org/schema/r4.0" xmlns:xsi="http://www.w3.
    org/2001/XMLSchema-instance" xsi:schemaLocation="http://autosar.org/
    schema/r4.0 AUTOSAR_00055.xsd">
  <ADMIN-DATA>
    <USED-LANGUAGES/>
  </ADMIN-DATA>
  <AR-PACKAGES>
    <AR-PACKAGE>
      <SHORT-NAME>AUTOSAR</SHORT-NAME>
      <AR-PACKAGES>
        <AR-PACKAGE>
          <SHORT-NAME>CONC_670</SHORT-NAME>
          <AR-PACKAGES>
            <AR-PACKAGE>
              <SHORT-NAME>PCFG_SYS</SHORT-NAME>
              <AR-PACKAGES>
                <AR-PACKAGE>
                  <SHORT-NAME>Systems</SHORT-NAME>
                  <ELEMENTS>
                    <SYSTEM>
                      <SHORT-NAME>System_AHB</SHORT-NAME>
                      <CATEGORY>SW_CLUSTER_SYSTEM_DESCRIPTION</CATEGORY>
```

```
<MAPPINGS>
  <SYSTEM-MAPPING>
    <SHORT-NAME>Sys_AHB_Maps</SHORT-NAME>
    <PORT-ELEMENT-TO-COM-RESOURCE-MAPPINGS>
      <PORT-ELEMENT-TO-COMMUNICATION-RESOURCE-MAPPING
          >
        <SHORT-NAME>Res_Map_DE_Anton</SHORT-NAME>
        <COMMUNICATION-RESOURCE-REF DEST="CP-SOFTWARE
            -CLUSTER-COMMUNICATION-RESOURCE">/AUTOSAR/
            CONC_670/SysResPool/
            CpSoftwareClusterResourcePools/
            ComResourcePool/Anton</COMMUNICATION-
            RESOURCE-REF>
        <VARIABLE-DATA-PROTOTYPE-IREF>
          <CONTEXT-COMPONENT-REF DEST="SW-COMPONENT-
              PROTOTYPE">/AUTOSAR/CONC_670/PCT_TopLvl/
              SwComponentTypes/TopLvl/CPT_SwcCompoAHB<
              /CONTEXT-COMPONENT-REF>
          <CONTEXT-COMPOSITION-REF DEST="ROOT-SW-
              COMPOSITION-PROTOTYPE">/AUTOSAR/CONC_670
              /PCFG_SYS/Systems/System_AHB/
              Sys_SWCluster_AHB</CONTEXT-COMPOSITION-
              REF>
          <CONTEXT-PORT-REF DEST="P-PORT-PROTOTYPE">/
              AUTOSAR/CONC_670/SwcCompoAHB/
              SwComponentTypes/SwcCompoAHB/PP_Anton</
              CONTEXT-PORT-REF>
          <TARGET-DATA-PROTOTYPE-REF DEST="VARIABLE-
              DATA-PROTOTYPE">/AUTOSAR/CONC_670/
              SwcCompoAHB/PortInterfaces/IF_Anton/
              Anton</TARGET-DATA-PROTOTYPE-REF>
        </VARIABLE-DATA-PROTOTYPE-IREF>
      </PORT-ELEMENT-TO-COMMUNICATION-RESOURCE-
          MAPPING>
      <PORT-ELEMENT-TO-COMMUNICATION-RESOURCE-MAPPING
          >
        <SHORT-NAME>Res_Map_DE_Bernd</SHORT-NAME>
        <COMMUNICATION-RESOURCE-REF DEST="CP-SOFTWARE
            -CLUSTER-COMMUNICATION-RESOURCE">/AUTOSAR/
            CONC_670/SysResPool/
            CpSoftwareClusterResourcePools/
            ComResourcePool/Bernd</COMMUNICATION-
            RESOURCE-REF>
        <VARIABLE-DATA-PROTOTYPE-IREF>
          <CONTEXT-COMPONENT-REF DEST="SW-COMPONENT-
              PROTOTYPE">/AUTOSAR/CONC_670/PCT_TopLvl/
              SwComponentTypes/TopLvl/CPT_SwcCompoAHB<
              /CONTEXT-COMPONENT-REF>
          <CONTEXT-COMPOSITION-REF DEST="ROOT-SW-
              COMPOSITION-PROTOTYPE">/AUTOSAR/CONC_670
              /PCFG_SYS/Systems/System_AHB/
              Sys_SWCluster_AHB</CONTEXT-COMPOSITION-
              REF>
```

```
          <CONTEXT-PORT-REF DEST="P-PORT-PROTOTYPE">/
              AUTOSAR/CONC_670/SwcCompoAHB/
              SwComponentTypes/SwcCompoAHB/PP_Bernd</
              CONTEXT-PORT-REF>
          <TARGET-DATA-PROTOTYPE-REF DEST="VARIABLE-
              DATA-PROTOTYPE">/AUTOSAR/CONC_670/
              SwcCompoAHB/PortInterfaces/IF_Bernd/
              Bernd</TARGET-DATA-PROTOTYPE-REF>
        </VARIABLE-DATA-PROTOTYPE-IREF>
      </PORT-ELEMENT-TO-COMMUNICATION-RESOURCE-
          MAPPING>
      <PORT-ELEMENT-TO-COMMUNICATION-RESOURCE-MAPPING
          >
        <SHORT-NAME>Res_Map_DE_Celine</SHORT-NAME>
        <COMMUNICATION-RESOURCE-REF DEST="CP-SOFTWARE
            -CLUSTER-COMMUNICATION-RESOURCE">/AUTOSAR/
            CONC_670/SysResPool/
            CpSoftwareClusterResourcePools/
            ComResourcePool/Celine</COMMUNICATION-
            RESOURCE-REF>
        <VARIABLE-DATA-PROTOTYPE-IREF>
          <CONTEXT-COMPONENT-REF DEST="SW-COMPONENT-
              PROTOTYPE">/AUTOSAR/CONC_670/PCT_TopLvl/
              SwComponentTypes/TopLvl/CPT_SwcCompoAHB<
              /CONTEXT-COMPONENT-REF>
          <CONTEXT-COMPOSITION-REF DEST="ROOT-SW-
              COMPOSITION-PROTOTYPE">/AUTOSAR/CONC_670
              /PCFG_SYS/Systems/System_AHB/
              Sys_SWCluster_AHB</CONTEXT-COMPOSITION-
              REF>
          <CONTEXT-PORT-REF DEST="R-PORT-PROTOTYPE">/
              AUTOSAR/CONC_670/SwcCompoAHB/
              SwComponentTypes/SwcCompoAHB/RP_Celine</
              CONTEXT-PORT-REF>
          <TARGET-DATA-PROTOTYPE-REF DEST="VARIABLE-
              DATA-PROTOTYPE">/AUTOSAR/CONC_670/
              SwcCompoAHB/PortInterfaces/IF_Celine/
              Celine</TARGET-DATA-PROTOTYPE-REF>
        </VARIABLE-DATA-PROTOTYPE-IREF>
      </PORT-ELEMENT-TO-COMMUNICATION-RESOURCE-
          MAPPING>
    </PORT-ELEMENT-TO-COM-RESOURCE-MAPPINGS>
    <SOFTWARE-CLUSTER-TO-RESOURCE-MAPPINGS>
      <CP-SOFTWARE-CLUSTER-TO-RESOURCE-MAPPING>
        <SHORT-NAME>Res_Map_BaseConfigCheck_AHB</
            SHORT-NAME>
        <DESC>
          <L-2 L="EN">Software Cluster resource
              mapping Base Config Check AHB for the
              complete ECU</L-2>
        </DESC>
        <REQUESTER-REFS>
          <REQUESTER-REF DEST="CP-SOFTWARE-CLUSTER">/
              AUTOSAR/CONC_670/PCFG_SYS/
              CpSoftwareClusters/SwClu_AHB</REQUESTER-
              REF>
```

```
    </REQUESTER-REFS>
    <SERVICE-RESOURCE-REF DEST="CP-SOFTWARE-
      CLUSTER-SERVICE-RESOURCE">/AUTOSAR/
      CONC_670/SysResPool/
      CpSoftwareClusterResourcePools/
      SwClusCResourcePool/BaseConfigCheck_AHB</
      SERVICE-RESOURCE-REF>
  </CP-SOFTWARE-CLUSTER-TO-RESOURCE-MAPPING>
  <CP-SOFTWARE-CLUSTER-TO-RESOURCE-MAPPING>
    <SHORT-NAME>Res_Map_XccBaseSocket_AHB</SHORT-
      NAME>
    <DESC>
      <L-2 L="EN">Software Cluster resource
        mapping Xcc Base Socket AHB for the
        complete ECU</L-2>
    </DESC>
    <REQUESTER-REFS>
      <REQUESTER-REF DEST="CP-SOFTWARE-CLUSTER">/
        AUTOSAR/CONC_670/PCFG_SYS/
        CpSoftwareClusters/SwClu_AHB</REQUESTER-
        REF>
    </REQUESTER-REFS>
    <SERVICE-RESOURCE-REF DEST="CP-SOFTWARE-
      CLUSTER-SERVICE-RESOURCE">/AUTOSAR/
      CONC_670/SysResPool/
      CpSoftwareClusterResourcePools/
      SwClusCResourcePool/XccBaseSocket_AHB</
      SERVICE-RESOURCE-REF>
  </CP-SOFTWARE-CLUSTER-TO-RESOURCE-MAPPING>
  <CP-SOFTWARE-CLUSTER-TO-RESOURCE-MAPPING>
    <SHORT-NAME>Res_Map_OsBaseSocket_AHB</SHORT-
      NAME>
    <DESC>
      <L-2 L="EN">Software Cluster resource
        mapping Xcc Base Socket AHB for the
        complete ECU</L-2>
    </DESC>
    <REQUESTER-REFS>
      <REQUESTER-REF DEST="CP-SOFTWARE-CLUSTER">/
        AUTOSAR/CONC_670/PCFG_SYS/
        CpSoftwareClusters/SwClu_AHB</REQUESTER-
        REF>
    </REQUESTER-REFS>
    <SERVICE-RESOURCE-REF DEST="CP-SOFTWARE-
      CLUSTER-SERVICE-RESOURCE">/AUTOSAR/
      CONC_670/SysResPool/
      CpSoftwareClusterResourcePools/
      OsResourcePool/OsBaseSocket_AHB</SERVICE-
      RESOURCE-REF>
  </CP-SOFTWARE-CLUSTER-TO-RESOURCE-MAPPING>
  <CP-SOFTWARE-CLUSTER-TO-RESOURCE-MAPPING>
    <SHORT-NAME>Res_Map_OsProxyOsT_50ms</SHORT-
      NAME>
    <DESC>
```

```
      <L-2 L="EN">Software Cluster resource
        mapping OsTask_50ms for the complete ECU
        </L-2>
    </DESC>
    <REQUESTER-REFS>
      <REQUESTER-REF DEST="CP-SOFTWARE-CLUSTER">/
        AUTOSAR/CONC_670/PCFG_SYS/
        CpSoftwareClusters/SwClu_AHB</REQUESTER-
        REF>
    </REQUESTER-REFS>
    <SERVICE-RESOURCE-REF DEST="CP-SOFTWARE-
      CLUSTER-SERVICE-RESOURCE">/AUTOSAR/
      CONC_670/SysResPool/
      CpSoftwareClusterResourcePools/
      OsResourcePool/OsProxyOsT_50ms</SERVICE-
      RESOURCE-REF>
  </CP-SOFTWARE-CLUSTER-TO-RESOURCE-MAPPING>
  <CP-SOFTWARE-CLUSTER-TO-RESOURCE-MAPPING>
    <SHORT-NAME>Res_Map_OsProxyOsT_10ms_Ph1</
      SHORT-NAME>
    <DESC>
      <L-2 L="EN">Software Cluster resource
        mapping OsTask_10ms for the complete ECU
        </L-2>
    </DESC>
    <REQUESTER-REFS>
      <REQUESTER-REF DEST="CP-SOFTWARE-CLUSTER">/
        AUTOSAR/CONC_670/PCFG_SYS/
        CpSoftwareClusters/SwClu_AHB</REQUESTER-
        REF>
    </REQUESTER-REFS>
    <SERVICE-RESOURCE-REF DEST="CP-SOFTWARE-
      CLUSTER-SERVICE-RESOURCE">/AUTOSAR/
      CONC_670/SysResPool/
      CpSoftwareClusterResourcePools/
      OsResourcePool/OsProxyOsT_10ms_Ph1</
      SERVICE-RESOURCE-REF>
  </CP-SOFTWARE-CLUSTER-TO-RESOURCE-MAPPING>
  <CP-SOFTWARE-CLUSTER-TO-RESOURCE-MAPPING>
    <SHORT-NAME>Res_Map_OsProxyOsT_10ms_Ph2</
      SHORT-NAME>
    <DESC>
      <L-2 L="EN">Software Cluster resource
        mapping Disp_50ms_Ph1 for the complete
        ECU</L-2>
    </DESC>
    <REQUESTER-REFS>
      <REQUESTER-REF DEST="CP-SOFTWARE-CLUSTER">/
        AUTOSAR/CONC_670/PCFG_SYS/
        CpSoftwareClusters/SwClu_AHB</REQUESTER-
        REF>
    </REQUESTER-REFS>
```

```
                    <SERVICE-RESOURCE-REF DEST="CP-SOFTWARE-
                        CLUSTER-SERVICE-RESOURCE">/AUTOSAR/
                        CONC_670/SysResPool/
                        CpSoftwareClusterResourcePools/
                        OsResourcePool/OsProxyOsT_10ms_Ph2</
                        SERVICE-RESOURCE-REF>
                  </CP-SOFTWARE-CLUSTER-TO-RESOURCE-MAPPING>
                </SOFTWARE-CLUSTER-TO-RESOURCE-MAPPINGS>
                <SW-MAPPINGS>
                  <SWC-TO-ECU-MAPPING>
                    <SHORT-NAME>SWC_AHB_Map</SHORT-NAME>
                    <COMPONENT-IREFS>
                      <COMPONENT-IREF>
                        <CONTEXT-COMPOSITION-REF DEST="ROOT-SW-
                            COMPOSITION-PROTOTYPE">/AUTOSAR/
                            CONC_670/PCFG_SYS/Systems/System/
                            CPT_TopLvl</CONTEXT-COMPOSITION-REF>
                        <TARGET-COMPONENT-REF DEST="SW-COMPONENT-
                            PROTOTYPE">/AUTOSAR/CONC_670/
                            PCT_TopLvl/SwComponentTypes/TopLvl/
                            CPT_SwcCompoAHB</TARGET-COMPONENT-REF>
                      </COMPONENT-IREF>
                    </COMPONENT-IREFS>
                    <ECU-INSTANCE-REF DEST="ECU-INSTANCE">/
                        AUTOSAR/CONC_670/PCFG_SYS/EcuInstances/
                        Machine_Host_AHB</ECU-INSTANCE-REF>
                  </SWC-TO-ECU-MAPPING>
                </SW-MAPPINGS>
              </SYSTEM-MAPPING>
            </MAPPINGS>
            <ROOT-SOFTWARE-COMPOSITIONS>
              <ROOT-SW-COMPOSITION-PROTOTYPE>
                <SHORT-NAME>Sys_SWCluster_AHB</SHORT-NAME>
                <SOFTWARE-COMPOSITION-TREF DEST="COMPOSITION-SW-
                    COMPONENT-TYPE">/AUTOSAR/CONC_670/PCT_TopLvl/
                    SwComponentTypes/TopLvl</SOFTWARE-COMPOSITION-
                    TREF>
              </ROOT-SW-COMPOSITION-PROTOTYPE>
            </ROOT-SOFTWARE-COMPOSITIONS>
            <SW-CLUSTERS>
              <CP-SOFTWARE-CLUSTER-REF-CONDITIONAL>
                <CP-SOFTWARE-CLUSTER-REF DEST="CP-SOFTWARE-
                    CLUSTER">/AUTOSAR/CONC_670/PCFG_SYS/
                    CpSoftwareClusters/SwClu_AHB</CP-SOFTWARE-
                    CLUSTER-REF>
              </CP-SOFTWARE-CLUSTER-REF-CONDITIONAL>
            </SW-CLUSTERS>
          </SYSTEM>
        </ELEMENTS>
      </AR-PACKAGE>
    </AR-PACKAGES>
  </AR-PACKAGE>
</AR-PACKAGES>
</AR-PACKAGE>
</AR-PACKAGE>
```

```
  </AR-PACKAGES>
</AUTOSAR>
```

Listing A.17: DOC_SwCluC_Sys_Extr_AHB.arxml

A.2.13 DOC_SwCluC_Sys_Extr_TopLvl_SWCD_AHB.arxml

```
<AUTOSAR xmlns="http://autosar.org/schema/r4.0" xmlns:xsi="http://www.w3.
    org/2001/XMLSchema-instance" xsi:schemaLocation="http://autosar.org/
    schema/r4.0 AUTOSAR_00055.xsd">
  <AR-PACKAGES>
    <AR-PACKAGE>
      <SHORT-NAME>AUTOSAR</SHORT-NAME>
      <AR-PACKAGES>
        <AR-PACKAGE>
          <SHORT-NAME>CONC_670</SHORT-NAME>
          <AR-PACKAGES>
            <AR-PACKAGE>
              <SHORT-NAME>PCT_TopLvl</SHORT-NAME>
              <AR-PACKAGES>
                <AR-PACKAGE>
                  <SHORT-NAME>SwComponentTypes</SHORT-NAME>
                  <ELEMENTS>
                    <COMPOSITION-SW-COMPONENT-TYPE>
                      <SHORT-NAME>TopLvl_DEL</SHORT-NAME>
                      <COMPONENTS>
                        <SW-COMPONENT-PROTOTYPE>
                          <SHORT-NAME>CPT_SwcCompoAHB_BAK</SHORT-NAME>
                          <TYPE-TREF DEST="COMPOSITION-SW-COMPONENT-TYPE">/
                              AUTOSAR/CONC_670/SwcCompoAHB/SwComponentTypes/
                              SwcCompoAHB</TYPE-TREF>
                        </SW-COMPONENT-PROTOTYPE>
                      </COMPONENTS>
                    </COMPOSITION-SW-COMPONENT-TYPE>
                  </ELEMENTS>
                </AR-PACKAGE>
              </AR-PACKAGES>
            </AR-PACKAGE>
          </AR-PACKAGES>
        </AR-PACKAGE>
      </AR-PACKAGES>
    </AR-PACKAGE>
  </AR-PACKAGES>
</AUTOSAR>
```

Listing A.18: DOC_SwCluC_Sys_Extr_TopLvl_SWCD_AHB.arxml

A.3 EcuConfiguration

A.3.1 DOC_SwCluC_Ecuc_EcuC_AHB.arxml

```
<AUTOSAR xmlns="http://autosar.org/schema/r4.0" xmlns:xsi="http://www.w3.
    org/2001/XMLSchema-instance" xsi:schemaLocation="http://autosar.org/
    schema/r4.0 AUTOSAR_00055.xsd">
  <AR-PACKAGES>
    <AR-PACKAGE>
      <SHORT-NAME>AUTOSAR_EcuC</SHORT-NAME>
      <AR-PACKAGES>
        <AR-PACKAGE>
          <SHORT-NAME>EcucModuleConfigurationValuess</SHORT-NAME>
          <ELEMENTS>
            <ECUC-MODULE-CONFIGURATION-VALUES>
              <SHORT-NAME>EcuC</SHORT-NAME>
              <DEFINITION-REF DEST="ECUC-MODULE-DEF">/AUTOSAR/EcucDefs/EcuC
                  </DEFINITION-REF>
              <ECUC-DEF-EDITION>1.0.0</ECUC-DEF-EDITION>
              <CONTAINERS>
                <ECUC-CONTAINER-VALUE>
                  <SHORT-NAME>EcucPartitionCollection</SHORT-NAME>
                  <DEFINITION-REF DEST="ECUC-PARAM-CONF-CONTAINER-DEF">/
                      AUTOSAR/EcucDefs/EcuC/EcucPartitionCollection</
                      DEFINITION-REF>
                  <SUB-CONTAINERS>
                    <ECUC-CONTAINER-VALUE>
                      <SHORT-NAME>PartitionCore1QM</SHORT-NAME>
                      <DEFINITION-REF DEST="ECUC-PARAM-CONF-CONTAINER-DEF">
                          /AUTOSAR/EcucDefs/EcuC/EcucPartitionCollection/
                          EcucPartition</DEFINITION-REF>
                      <PARAMETER-VALUES>
                      </PARAMETER-VALUES>
                    </ECUC-CONTAINER-VALUE>
                  </SUB-CONTAINERS>
                </ECUC-CONTAINER-VALUE>
              </CONTAINERS>
            </ECUC-MODULE-CONFIGURATION-VALUES>
          </ELEMENTS>
        </AR-PACKAGE>
      </AR-PACKAGES>
    </AR-PACKAGE>
  </AR-PACKAGES>
</AUTOSAR>
```

Listing A.19: DOC_SwCluC_Ecuc_EcuC_AHB.arxml

A.3.2 DOC_SwCluC_Ecuc_Os_AHB.arxml

```
<AUTOSAR xmlns="http://autosar.org/schema/r4.0" xmlns:xsi="http://www.w3.
    org/2001/XMLSchema-instance" xsi:schemaLocation="http://autosar.org/
    schema/r4.0 AUTOSAR_00055.xsd">
  <AR-PACKAGES>
    <AR-PACKAGE>
      <SHORT-NAME>AUTOSAR_Os</SHORT-NAME>
      <AR-PACKAGES>
        <AR-PACKAGE>
          <SHORT-NAME>EcucModuleConfigurationValuess</SHORT-NAME>
          <ELEMENTS>
            <ECUC-MODULE-CONFIGURATION-VALUES>
              <SHORT-NAME>Os</SHORT-NAME>
              <DEFINITION-REF DEST="ECUC-MODULE-DEF">/AUTOSAR/EcucDefs/Os</
                  DEFINITION-REF>
              <ECUC-DEF-EDITION>1.0.0</ECUC-DEF-EDITION>
              <CONTAINERS>
                <ECUC-CONTAINER-VALUE>
                  <SHORT-NAME>Core1QM</SHORT-NAME>
                  <DEFINITION-REF DEST="ECUC-PARAM-CONF-CONTAINER-DEF">/
                      AUTOSAR/EcucDefs/Os/OsApplication</DEFINITION-REF>
                  <REFERENCE-VALUES>
                    <ECUC-REFERENCE-VALUE>
                      <DEFINITION-REF DEST="ECUC-REFERENCE-DEF">/AUTOSAR/
                          EcucDefs/Os/OsApplication/OsAppTaskRef</DEFINITION
                          -REF>
                      <VALUE-REF DEST="ECUC-CONTAINER-VALUE">/AUTOSAR_Os/
                          EcucModuleConfigurationValuess/Os/OsTask_10ms_Ph1<
                          /VALUE-REF>
                    </ECUC-REFERENCE-VALUE>
                    <ECUC-REFERENCE-VALUE>
                      <DEFINITION-REF DEST="ECUC-REFERENCE-DEF">/AUTOSAR/
                          EcucDefs/Os/OsApplication/OsAppTaskRef</DEFINITION
                          -REF>
                      <VALUE-REF DEST="ECUC-CONTAINER-VALUE">/AUTOSAR_Os/
                          EcucModuleConfigurationValuess/Os/OsTask_10ms_Ph2<
                          /VALUE-REF>
                    </ECUC-REFERENCE-VALUE>
                    <ECUC-REFERENCE-VALUE>
                      <DEFINITION-REF DEST="ECUC-REFERENCE-DEF">/AUTOSAR/
                          EcucDefs/Os/OsApplication/OsAppTaskRef</DEFINITION
                          -REF>
                      <VALUE-REF DEST="ECUC-CONTAINER-VALUE">/AUTOSAR_Os/
                          EcucModuleConfigurationValuess/Os/OsTask_50ms</
                          VALUE-REF>
                    </ECUC-REFERENCE-VALUE>
                  </REFERENCE-VALUES>
                </ECUC-CONTAINER-VALUE>
                <ECUC-CONTAINER-VALUE>
                  <SHORT-NAME>OsTask_10ms_Ph1</SHORT-NAME>
                  <DEFINITION-REF DEST="ECUC-PARAM-CONF-CONTAINER-DEF">/
                      AUTOSAR/EcucDefs/Os/OsTask</DEFINITION-REF>
                  <PARAMETER-VALUES>
                    <ECUC-NUMERICAL-PARAM-VALUE>
                      <DEFINITION-REF DEST="ECUC-INTEGER-PARAM-DEF">/
                          AUTOSAR/EcucDefs/Os/OsTask/OsTaskActivation</
                          DEFINITION-REF>
```

```
        <VALUE>1</VALUE>
      </ECUC-NUMERICAL-PARAM-VALUE>
      <ECUC-NUMERICAL-PARAM-VALUE>
        <DEFINITION-REF DEST="ECUC-FLOAT-PARAM-DEF">/AUTOSAR/
            EcucDefs/Os/OsTask/OsTaskPeriod</DEFINITION-REF>
        <VALUE>0.01</VALUE>
      </ECUC-NUMERICAL-PARAM-VALUE>
      <ECUC-NUMERICAL-PARAM-VALUE>
        <DEFINITION-REF DEST="ECUC-INTEGER-PARAM-DEF">/
            AUTOSAR/EcucDefs/Os/OsTask/OsTaskPriority</
            DEFINITION-REF>
        <VALUE>10</VALUE>
      </ECUC-NUMERICAL-PARAM-VALUE>
      <ECUC-TEXTUAL-PARAM-VALUE>
        <DEFINITION-REF DEST="ECUC-ENUMERATION-PARAM-DEF">/
            AUTOSAR/EcucDefs/Os/OsTask/OsTaskSchedule</
            DEFINITION-REF>
        <VALUE>FULL</VALUE>
      </ECUC-TEXTUAL-PARAM-VALUE>
    </PARAMETER-VALUES>
  </ECUC-CONTAINER-VALUE>
  <ECUC-CONTAINER-VALUE>
    <SHORT-NAME>OsTask_10ms_Ph2</SHORT-NAME>
    <DEFINITION-REF DEST="ECUC-PARAM-CONF-CONTAINER-DEF">/
        AUTOSAR/EcucDefs/Os/OsTask</DEFINITION-REF>
    <PARAMETER-VALUES>
      <ECUC-NUMERICAL-PARAM-VALUE>
        <DEFINITION-REF DEST="ECUC-INTEGER-PARAM-DEF">/
            AUTOSAR/EcucDefs/Os/OsTask/OsTaskPriority</
            DEFINITION-REF>
        <VALUE>10</VALUE>
      </ECUC-NUMERICAL-PARAM-VALUE>
      <ECUC-NUMERICAL-PARAM-VALUE>
        <DEFINITION-REF DEST="ECUC-FLOAT-PARAM-DEF">/AUTOSAR/
            EcucDefs/Os/OsTask/OsTaskPeriod</DEFINITION-REF>
        <VALUE>0.01</VALUE>
      </ECUC-NUMERICAL-PARAM-VALUE>
      <ECUC-TEXTUAL-PARAM-VALUE>
        <DEFINITION-REF DEST="ECUC-ENUMERATION-PARAM-DEF">/
            AUTOSAR/EcucDefs/Os/OsTask/OsTaskSchedule</
            DEFINITION-REF>
        <VALUE>FULL</VALUE>
      </ECUC-TEXTUAL-PARAM-VALUE>
      <ECUC-NUMERICAL-PARAM-VALUE>
        <DEFINITION-REF DEST="ECUC-INTEGER-PARAM-DEF">/
            AUTOSAR/EcucDefs/Os/OsTask/OsTaskActivation</
            DEFINITION-REF>
        <VALUE>1</VALUE>
      </ECUC-NUMERICAL-PARAM-VALUE>
    </PARAMETER-VALUES>
  </ECUC-CONTAINER-VALUE>
  <ECUC-CONTAINER-VALUE>
    <SHORT-NAME>OsTask_50ms</SHORT-NAME>
    <DEFINITION-REF DEST="ECUC-PARAM-CONF-CONTAINER-DEF">/
        AUTOSAR/EcucDefs/Os/OsTask</DEFINITION-REF>
    <PARAMETER-VALUES>
```

```
                    <ECUC-NUMERICAL-PARAM-VALUE>
                      <DEFINITION-REF DEST="ECUC-INTEGER-PARAM-DEF">/
                          AUTOSAR/EcucDefs/Os/OsTask/OsTaskPriority</
                          DEFINITION-REF>
                      <VALUE>50</VALUE>
                    </ECUC-NUMERICAL-PARAM-VALUE>
                    <ECUC-NUMERICAL-PARAM-VALUE>
                      <DEFINITION-REF DEST="ECUC-FLOAT-PARAM-DEF">/AUTOSAR/
                          EcucDefs/Os/OsTask/OsTaskPeriod</DEFINITION-REF>
                      <VALUE>0.05</VALUE>
                    </ECUC-NUMERICAL-PARAM-VALUE>
                    <ECUC-TEXTUAL-PARAM-VALUE>
                      <DEFINITION-REF DEST="ECUC-ENUMERATION-PARAM-DEF">/
                          AUTOSAR/EcucDefs/Os/OsTask/OsTaskSchedule</
                          DEFINITION-REF>
                      <VALUE>FULL</VALUE>
                    </ECUC-TEXTUAL-PARAM-VALUE>
                    <ECUC-NUMERICAL-PARAM-VALUE>
                      <DEFINITION-REF DEST="ECUC-INTEGER-PARAM-DEF">/
                          AUTOSAR/EcucDefs/Os/OsTask/OsTaskActivation</
                          DEFINITION-REF>
                      <VALUE>1</VALUE>
                    </ECUC-NUMERICAL-PARAM-VALUE>
                  </PARAMETER-VALUES>
                </ECUC-CONTAINER-VALUE>
              </CONTAINERS>
            </ECUC-MODULE-CONFIGURATION-VALUES>
          </ELEMENTS>
        </AR-PACKAGE>
      </AR-PACKAGES>
    </AR-PACKAGE>
  </AR-PACKAGES>
</AUTOSAR>
```

Listing A.20: DOC_SwCluC_Ecuc_Os_AHB.arxml

A.3.3 DOC_SwCluC_Ecuc_Os_Host.arxml

```
<AUTOSAR xmlns="http://autosar.org/schema/r4.0" xmlns:xsi="http://www.w3.
    org/2001/XMLSchema-instance" xsi:schemaLocation="http://autosar.org/
    schema/r4.0 AUTOSAR_00055.xsd">
  <AR-PACKAGES>
    <AR-PACKAGE>
      <SHORT-NAME>AUTOSAR_Os</SHORT-NAME>
      <AR-PACKAGES>
        <AR-PACKAGE>
          <SHORT-NAME>EcucModuleConfigurationValuess</SHORT-NAME>
          <ELEMENTS>
            <ECUC-MODULE-CONFIGURATION-VALUES>
              <SHORT-NAME>Os</SHORT-NAME>
              <DEFINITION-REF DEST="ECUC-MODULE-DEF">/AUTOSAR/EcucDefs/Os</
                  DEFINITION-REF>
```

```
<ECUC-DEF-EDITION>1.0.0</ECUC-DEF-EDITION>
<CONTAINERS>
  <ECUC-CONTAINER-VALUE>
    <SHORT-NAME>Core1QM</SHORT-NAME>
    <DEFINITION-REF DEST="ECUC-PARAM-CONF-CONTAINER-DEF">/
       AUTOSAR/EcucDefs/Os/OsApplication</DEFINITION-REF>
    <REFERENCE-VALUES>
      <ECUC-REFERENCE-VALUE>
        <DEFINITION-REF DEST="ECUC-REFERENCE-DEF">/AUTOSAR/
           EcucDefs/Os/OsApplication/OsAppTaskRef</DEFINITION
           -REF>
        <VALUE-REF DEST="ECUC-CONTAINER-VALUE">/AUTOSAR_Os/
           EcucModuleConfigurationValuess/Os/OsTask_10ms</
           VALUE-REF>
      </ECUC-REFERENCE-VALUE>
      <ECUC-REFERENCE-VALUE>
        <DEFINITION-REF DEST="ECUC-REFERENCE-DEF">/AUTOSAR/
           EcucDefs/Os/OsApplication/OsAppTaskRef</DEFINITION
           -REF>
        <VALUE-REF DEST="ECUC-CONTAINER-VALUE">/AUTOSAR_Os/
           EcucModuleConfigurationValuess/Os/OsTask_50ms</
           VALUE-REF>
      </ECUC-REFERENCE-VALUE>
    </REFERENCE-VALUES>
  </ECUC-CONTAINER-VALUE>
  <ECUC-CONTAINER-VALUE>
    <SHORT-NAME>OsTask_10ms</SHORT-NAME>
    <DEFINITION-REF DEST="ECUC-PARAM-CONF-CONTAINER-DEF">/
       AUTOSAR/EcucDefs/Os/OsTask</DEFINITION-REF>
    <PARAMETER-VALUES>
      <ECUC-NUMERICAL-PARAM-VALUE>
        <DEFINITION-REF DEST="ECUC-INTEGER-PARAM-DEF">/
           AUTOSAR/EcucDefs/Os/OsTask/OsTaskPriority</
           DEFINITION-REF>
        <VALUE>10</VALUE>
      </ECUC-NUMERICAL-PARAM-VALUE>
      <ECUC-NUMERICAL-PARAM-VALUE>
        <DEFINITION-REF DEST="ECUC-FLOAT-PARAM-DEF">/AUTOSAR/
           EcucDefs/Os/OsTask/OsTaskPeriod</DEFINITION-REF>
        <VALUE>0.01</VALUE>
      </ECUC-NUMERICAL-PARAM-VALUE>
      <ECUC-TEXTUAL-PARAM-VALUE>
        <DEFINITION-REF DEST="ECUC-ENUMERATION-PARAM-DEF">/
           AUTOSAR/EcucDefs/Os/OsTask/OsTaskSchedule</
           DEFINITION-REF>
        <VALUE>FULL</VALUE>
      </ECUC-TEXTUAL-PARAM-VALUE>
      <ECUC-NUMERICAL-PARAM-VALUE>
        <DEFINITION-REF DEST="ECUC-INTEGER-PARAM-DEF">/
           AUTOSAR/EcucDefs/Os/OsTask/OsTaskActivation</
           DEFINITION-REF>
        <VALUE>1</VALUE>
      </ECUC-NUMERICAL-PARAM-VALUE>
    </PARAMETER-VALUES>
  </ECUC-CONTAINER-VALUE>
  <ECUC-CONTAINER-VALUE>
```

```
                <SHORT-NAME>OsTask_50ms</SHORT-NAME>
                <DEFINITION-REF DEST="ECUC-PARAM-CONF-CONTAINER-DEF">/
                    AUTOSAR/EcucDefs/Os/OsTask</DEFINITION-REF>
                <PARAMETER-VALUES>
                  <ECUC-NUMERICAL-PARAM-VALUE>
                    <DEFINITION-REF DEST="ECUC-INTEGER-PARAM-DEF">/
                        AUTOSAR/EcucDefs/Os/OsTask/OsTaskPriority</
                        DEFINITION-REF>
                    <VALUE>50</VALUE>
                  </ECUC-NUMERICAL-PARAM-VALUE>
                  <ECUC-NUMERICAL-PARAM-VALUE>
                    <DEFINITION-REF DEST="ECUC-FLOAT-PARAM-DEF">/AUTOSAR/
                        EcucDefs/Os/OsTask/OsTaskPeriod</DEFINITION-REF>
                    <VALUE>0.05</VALUE>
                  </ECUC-NUMERICAL-PARAM-VALUE>
                  <ECUC-TEXTUAL-PARAM-VALUE>
                    <DEFINITION-REF DEST="ECUC-ENUMERATION-PARAM-DEF">/
                        AUTOSAR/EcucDefs/Os/OsTask/OsTaskSchedule</
                        DEFINITION-REF>
                    <VALUE>FULL</VALUE>
                  </ECUC-TEXTUAL-PARAM-VALUE>
                  <ECUC-NUMERICAL-PARAM-VALUE>
                    <DEFINITION-REF DEST="ECUC-INTEGER-PARAM-DEF">/
                        AUTOSAR/EcucDefs/Os/OsTask/OsTaskActivation</
                        DEFINITION-REF>
                    <VALUE>1</VALUE>
                  </ECUC-NUMERICAL-PARAM-VALUE>
                </PARAMETER-VALUES>
              </ECUC-CONTAINER-VALUE>
            </CONTAINERS>
          </ECUC-MODULE-CONFIGURATION-VALUES>
        </ELEMENTS>
      </AR-PACKAGE>
    </AR-PACKAGES>
  </AR-PACKAGE>
 </AR-PACKAGES>
</AUTOSAR>
```

Listing A.21: DOC_SwCluC_Ecuc_Os_Host.arxml

A.3.4 DOC_SwCluC_Ecuc_SwCluC_AHB.arxml

```
<AUTOSAR xmlns="http://autosar.org/schema/r4.0" xmlns:xsi="http://www.w3.
    org/2001/XMLSchema-instance" xsi:schemaLocation="http://autosar.org/
    schema/r4.0 AUTOSAR_00055.xsd">
  <AR-PACKAGES>
    <AR-PACKAGE>
      <SHORT-NAME>AUTOSAR_SwCluC</SHORT-NAME>
      <AR-PACKAGES>
        <AR-PACKAGE>
          <SHORT-NAME>EcucModuleConfigurationValuess</SHORT-NAME>
          <ELEMENTS>
```

```
<ECUC-MODULE-CONFIGURATION-VALUES>
  <SHORT-NAME>SwCluC</SHORT-NAME>
  <DEFINITION-REF DEST="ECUC-MODULE-DEF">/AUTOSAR/EcucDefs/
      SwCluC</DEFINITION-REF>
  <ECUC-DEF-EDITION>1.0.0</ECUC-DEF-EDITION>
  <CONTAINERS>
    <ECUC-CONTAINER-VALUE>
      <SHORT-NAME>SwCluCDefinitionSet</SHORT-NAME>
      <DEFINITION-REF DEST="ECUC-PARAM-CONF-CONTAINER-DEF">/
          AUTOSAR/EcucDefs/SwCluC/SwCluCDefinitionSet</
          DEFINITION-REF>
      <SUB-CONTAINERS>
        <ECUC-CONTAINER-VALUE>
          <SHORT-NAME>ClusterHost</SHORT-NAME>
          <DEFINITION-REF DEST="ECUC-PARAM-CONF-CONTAINER-DEF">
              /AUTOSAR/EcucDefs/SwCluC/SwCluCDefinitionSet/
              SwCluCDefinition</DEFINITION-REF>
          <PARAMETER-VALUES>
            <ECUC-TEXTUAL-PARAM-VALUE>
              <DEFINITION-REF DEST="ECUC-ENUMERATION-PARAM-DEF"
                  >/AUTOSAR/EcucDefs/SwCluC/SwCluCDefinitionSet/
                  SwCluCDefinition/
                  SwCluCBManifDescriptorTreatment</DEFINITION-
                  REF>
              <VALUE>EMBED_DESCRIPTORS</VALUE>
            </ECUC-TEXTUAL-PARAM-VALUE>
            <ECUC-TEXTUAL-PARAM-VALUE>
              <DEFINITION-REF DEST="ECUC-ENUMERATION-PARAM-DEF"
                  >/AUTOSAR/EcucDefs/SwCluC/SwCluCDefinitionSet/
                  SwCluCDefinition/
                  SwCluCBManifOnBoardConnectorControl</
                  DEFINITION-REF>
              <VALUE>ENABLE_ON_ECU_CONNECTOR</VALUE>
            </ECUC-TEXTUAL-PARAM-VALUE>
            <ECUC-NUMERICAL-PARAM-VALUE>
              <DEFINITION-REF DEST="ECUC-INTEGER-PARAM-DEF">/
                  AUTOSAR/EcucDefs/SwCluC/SwCluCDefinitionSet/
                  SwCluCDefinition/SwCluCMachineId</DEFINITION-
                  REF>
              <VALUE>0</VALUE>
            </ECUC-NUMERICAL-PARAM-VALUE>
            <ECUC-NUMERICAL-PARAM-VALUE>
              <DEFINITION-REF DEST="ECUC-INTEGER-PARAM-DEF">/
                  AUTOSAR/EcucDefs/SwCluC/SwCluCDefinitionSet/
                  SwCluCDefinition/SwCluCSoftwareClusterId</
                  DEFINITION-REF>
              <VALUE>0</VALUE>
            </ECUC-NUMERICAL-PARAM-VALUE>
            <ECUC-TEXTUAL-PARAM-VALUE>
              <DEFINITION-REF DEST="ECUC-ENUMERATION-PARAM-DEF"
                  >/AUTOSAR/EcucDefs/SwCluC/SwCluCDefinitionSet/
                  SwCluCDefinition/SwCluCSoftwareClusterType</
                  DEFINITION-REF>
              <VALUE>HOST_SW_CLUSTER</VALUE>
            </ECUC-TEXTUAL-PARAM-VALUE>
          </PARAMETER-VALUES>
```

```
      <REFERENCE-VALUES>
        <ECUC-REFERENCE-VALUE>
          <DEFINITION-REF DEST="ECUC-FOREIGN-REFERENCE-DEF"
              >/AUTOSAR/EcucDefs/SwCluC/SwCluCDefinitionSet/
              SwCluCDefinition/SwCluCSoftwareClusterRef</
              DEFINITION-REF>
          <VALUE-REF DEST="CP-SOFTWARE-CLUSTER">/AUTOSAR/
              CONC_670/PCFG_SYS/CpSoftwareClusters/
              SwClu_Host</VALUE-REF>
        </ECUC-REFERENCE-VALUE>
      </REFERENCE-VALUES>
    </ECUC-CONTAINER-VALUE>
    <ECUC-CONTAINER-VALUE>
      <SHORT-NAME>ClusterAHB</SHORT-NAME>
      <DEFINITION-REF DEST="ECUC-PARAM-CONF-CONTAINER-DEF">
          /AUTOSAR/EcucDefs/SwCluC/SwCluCDefinitionSet/
          SwCluCDefinition</DEFINITION-REF>
      <PARAMETER-VALUES>
        <ECUC-TEXTUAL-PARAM-VALUE>
          <DEFINITION-REF DEST="ECUC-ENUMERATION-PARAM-DEF"
              >/AUTOSAR/EcucDefs/SwCluC/SwCluCDefinitionSet/
              SwCluCDefinition/
              SwCluCBManifDescriptorTreatment</DEFINITION-
              REF>
          <VALUE>EMBED_DESCRIPTORS</VALUE>
        </ECUC-TEXTUAL-PARAM-VALUE>
        <ECUC-TEXTUAL-PARAM-VALUE>
          <DEFINITION-REF DEST="ECUC-ENUMERATION-PARAM-DEF"
              >/AUTOSAR/EcucDefs/SwCluC/SwCluCDefinitionSet/
              SwCluCDefinition/
              SwCluCBManifOnBoardConnectorControl</
              DEFINITION-REF>
          <VALUE>ENABLE_ON_ECU_CONNECTOR</VALUE>
        </ECUC-TEXTUAL-PARAM-VALUE>
        <ECUC-NUMERICAL-PARAM-VALUE>
          <DEFINITION-REF DEST="ECUC-INTEGER-PARAM-DEF">/
              AUTOSAR/EcucDefs/SwCluC/SwCluCDefinitionSet/
              SwCluCDefinition/SwCluCMachineId</DEFINITION-
              REF>
          <VALUE>0</VALUE>
        </ECUC-NUMERICAL-PARAM-VALUE>
        <ECUC-NUMERICAL-PARAM-VALUE>
          <DEFINITION-REF DEST="ECUC-INTEGER-PARAM-DEF">/
              AUTOSAR/EcucDefs/SwCluC/SwCluCDefinitionSet/
              SwCluCDefinition/SwCluCSoftwareClusterId</
              DEFINITION-REF>
          <VALUE>1</VALUE>
        </ECUC-NUMERICAL-PARAM-VALUE>
        <ECUC-TEXTUAL-PARAM-VALUE>
          <DEFINITION-REF DEST="ECUC-ENUMERATION-PARAM-DEF"
              >/AUTOSAR/EcucDefs/SwCluC/SwCluCDefinitionSet/
              SwCluCDefinition/SwCluCSoftwareClusterType</
              DEFINITION-REF>
          <VALUE>APPLICATION_SW_CLUSTER</VALUE>
        </ECUC-TEXTUAL-PARAM-VALUE>
      </PARAMETER-VALUES>
```

```
        <REFERENCE-VALUES>
          <ECUC-REFERENCE-VALUE>
            <DEFINITION-REF DEST="ECUC-FOREIGN-REFERENCE-DEF"
                >/AUTOSAR/EcucDefs/SwCluC/SwCluCDefinitionSet/
                SwCluCDefinition/SwCluCSoftwareClusterRef</
                DEFINITION-REF>
            <VALUE-REF DEST="CP-SOFTWARE-CLUSTER">/AUTOSAR/
                CONC_670/PCFG_SYS/CpSoftwareClusters/SwClu_AHB
                </VALUE-REF>
          </ECUC-REFERENCE-VALUE>
        </REFERENCE-VALUES>
      </ECUC-CONTAINER-VALUE>
    </SUB-CONTAINERS>
  </ECUC-CONTAINER-VALUE>
  <ECUC-CONTAINER-VALUE>
    <SHORT-NAME>SwCluCGeneral</SHORT-NAME>
    <DEFINITION-REF DEST="ECUC-PARAM-CONF-CONTAINER-DEF">/
        AUTOSAR/EcucDefs/SwCluC/SwCluCGeneral</DEFINITION-REF>
    <REFERENCE-VALUES>
      <ECUC-REFERENCE-VALUE>
        <DEFINITION-REF DEST="ECUC-REFERENCE-DEF">/AUTOSAR/
            EcucDefs/SwCluC/SwCluCGeneral/
            SwCluCDefinitionSelection</DEFINITION-REF>
        <VALUE-REF DEST="ECUC-CONTAINER-VALUE">/
            AUTOSAR_SwCluC/EcucModuleConfigurationValuess/
            SwCluC/SwCluCDefinitionSet/ClusterAHB</VALUE-REF>
      </ECUC-REFERENCE-VALUE>
    </REFERENCE-VALUES>
  </ECUC-CONTAINER-VALUE>
  <ECUC-CONTAINER-VALUE>
    <SHORT-NAME>SwCluCBaseConfigurationCheck</SHORT-NAME>
    <DEFINITION-REF DEST="ECUC-PARAM-CONF-CONTAINER-DEF">/
        AUTOSAR/EcucDefs/SwCluC/SwCluCBaseConfigurationCheck</
        DEFINITION-REF>
    <PARAMETER-VALUES>
      <ECUC-TEXTUAL-PARAM-VALUE>
        <DEFINITION-REF DEST="ECUC-MULTILINE-STRING-PARAM-DEF
            ">/AUTOSAR/EcucDefs/SwCluC/
            SwCluCBaseConfigurationCheck/
            SwCluCAutoBaseConfigDescriptor</DEFINITION-REF>
        <VALUE>compiler flags= -O3 -w -std=c99</VALUE>
      </ECUC-TEXTUAL-PARAM-VALUE>
      <ECUC-TEXTUAL-PARAM-VALUE>
        <DEFINITION-REF DEST="ECUC-MULTILINE-STRING-PARAM-DEF
            ">/AUTOSAR/EcucDefs/SwCluC/
            SwCluCBaseConfigurationCheck/
            SwCluCUserBaseConfigDescriptor</DEFINITION-REF>
        <VALUE>Integration according to Architecture
            Specification 1.0.2</VALUE>
      </ECUC-TEXTUAL-PARAM-VALUE>
    </PARAMETER-VALUES>
    <REFERENCE-VALUES>
      <ECUC-REFERENCE-VALUE>
```

```
            <DEFINITION-REF DEST="ECUC-FOREIGN-REFERENCE-DEF">/
                AUTOSAR/EcucDefs/SwCluC/
                SwCluCBaseConfigurationCheck/SwCluCResourceRef</
                DEFINITION-REF>
            <VALUE-REF DEST="CP-SOFTWARE-CLUSTER-SERVICE-RESOURCE
                ">/AUTOSAR/CONC_670/SysResPool/
                CpSoftwareClusterResourcePools/SwClusCResourcePool
                /BaseConfigCheck_AHB</VALUE-REF>
          </ECUC-REFERENCE-VALUE>
        </REFERENCE-VALUES>
      </ECUC-CONTAINER-VALUE>
      <ECUC-CONTAINER-VALUE>
        <SHORT-NAME>SwCluCXcc</SHORT-NAME>
        <DEFINITION-REF DEST="ECUC-PARAM-CONF-CONTAINER-DEF">/
            AUTOSAR/EcucDefs/SwCluC/SwCluCXcc</DEFINITION-REF>
        <PARAMETER-VALUES>
          <ECUC-TEXTUAL-PARAM-VALUE>
            <DEFINITION-REF DEST="ECUC-ENUMERATION-PARAM-DEF">/
                AUTOSAR/EcucDefs/SwCluC/SwCluCXcc/
                SwCluCXccDefaultDataHandling</DEFINITION-REF>
            <VALUE>DEFAULTS_AS_CALPRMS</VALUE>
          </ECUC-TEXTUAL-PARAM-VALUE>
        </PARAMETER-VALUES>
        <SUB-CONTAINERS>
          <ECUC-CONTAINER-VALUE>
            <SHORT-NAME>Gr8Xcc</SHORT-NAME>
            <DEFINITION-REF DEST="ECUC-PARAM-CONF-CONTAINER-DEF">
                /AUTOSAR/EcucDefs/SwCluC/SwCluCXcc/
                RteRipsPluginProps</DEFINITION-REF>
            <PARAMETER-VALUES>
              <ECUC-NUMERICAL-PARAM-VALUE>
                <DEFINITION-REF DEST="ECUC-BOOLEAN-PARAM-DEF">/
                    AUTOSAR/EcucDefs/SwCluC/SwCluCXcc/
                    RteRipsPluginProps/
                    RtePluginSupportsIReadIWrite</DEFINITION-REF>
                <VALUE>true</VALUE>
              </ECUC-NUMERICAL-PARAM-VALUE>
              <ECUC-TEXTUAL-PARAM-VALUE>
                <DEFINITION-REF DEST="ECUC-ENUMERATION-PARAM-DEF"
                    >/AUTOSAR/EcucDefs/SwCluC/SwCluCXcc/
                    RteRipsPluginProps/
                    RteRipsGlobalCopyInstantiationPolicy</
                    DEFINITION-REF>
                <VALUE>RTE_RIPS_INSTANTIATION_BY_PLUGIN</VALUE>
              </ECUC-TEXTUAL-PARAM-VALUE>
              <ECUC-TEXTUAL-PARAM-VALUE>
                <DEFINITION-REF DEST="ECUC-ENUMERATION-PARAM-DEF"
                    >/AUTOSAR/EcucDefs/SwCluC/SwCluCXcc/
                    RteRipsPluginProps/
                    RteRipsPluginCommunicationScope</DEFINITION-
                    REF>
                <VALUE>RTE_RIPS_CROSS_SW_CLUSTER_COM</VALUE>
              </ECUC-TEXTUAL-PARAM-VALUE>
            </PARAMETER-VALUES>
          </ECUC-CONTAINER-VALUE>
          <ECUC-CONTAINER-VALUE>
```

```
            <SHORT-NAME>SwCluCXccBaseSocket</SHORT-NAME>
            <DEFINITION-REF DEST="ECUC-PARAM-CONF-CONTAINER-DEF">
                /AUTOSAR/EcucDefs/SwCluC/SwCluCXcc/
                SwCluCXccBaseSocket</DEFINITION-REF>
            <REFERENCE-VALUES>
              <ECUC-REFERENCE-VALUE>
                <DEFINITION-REF DEST="ECUC-REFERENCE-DEF">/
                    AUTOSAR/EcucDefs/SwCluC/SwCluCXcc/
                    SwCluCXccBaseSocket/SwCluCXccEcucPartitionRef<
                    /DEFINITION-REF>
                <VALUE-REF DEST="ECUC-CONTAINER-VALUE">/
                    AUTOSAR_EcuC/EcucModuleConfigurationValuess/
                    EcuC/EcucPartitionCollection/PartitionCore1QM<
                    /VALUE-REF>
              </ECUC-REFERENCE-VALUE>
              <ECUC-REFERENCE-VALUE>
                <DEFINITION-REF DEST="ECUC-FOREIGN-REFERENCE-DEF"
                    >/AUTOSAR/EcucDefs/SwCluC/SwCluCXcc/
                    SwCluCXccBaseSocket/SwCluCResourceRef</
                    DEFINITION-REF>
                <VALUE-REF DEST="CP-SOFTWARE-CLUSTER-SERVICE-
                    RESOURCE">/AUTOSAR/CONC_670/SysResPool/
                    CpSoftwareClusterResourcePools/
                    SwClusCResourcePool/XccBaseSocket_AHB</VALUE-
                    REF>
              </ECUC-REFERENCE-VALUE>
            </REFERENCE-VALUES>
          </ECUC-CONTAINER-VALUE>
        </SUB-CONTAINERS>
      </ECUC-CONTAINER-VALUE>
      <ECUC-CONTAINER-VALUE>
        <SHORT-NAME>SwCluCProxies</SHORT-NAME>
        <DEFINITION-REF DEST="ECUC-PARAM-CONF-CONTAINER-DEF">/
            AUTOSAR/EcucDefs/SwCluC/SwCluCProxies</DEFINITION-REF>
        <PARAMETER-VALUES>
          <ECUC-TEXTUAL-PARAM-VALUE>
            <DEFINITION-REF DEST="ECUC-ENUMERATION-PARAM-DEF">/
                AUTOSAR/EcucDefs/SwCluC/SwCluCProxies/
                SwCluCProxyGenerationNvM</DEFINITION-REF>
            <VALUE>PROXY_DISABLED</VALUE>
          </ECUC-TEXTUAL-PARAM-VALUE>
          <ECUC-TEXTUAL-PARAM-VALUE>
            <DEFINITION-REF DEST="ECUC-ENUMERATION-PARAM-DEF">/
                AUTOSAR/EcucDefs/SwCluC/SwCluCProxies/
                SwCluCProxyGenerationOs</DEFINITION-REF>
            <VALUE>HIGH_PROXY</VALUE>
          </ECUC-TEXTUAL-PARAM-VALUE>
        </PARAMETER-VALUES>
        <SUB-CONTAINERS>
          <ECUC-CONTAINER-VALUE>
            <SHORT-NAME>SwCluCOsProxy</SHORT-NAME>
            <DEFINITION-REF DEST="ECUC-PARAM-CONF-CONTAINER-DEF">
                /AUTOSAR/EcucDefs/SwCluC/SwCluCProxies/
                SwCluCOsProxy</DEFINITION-REF>
            <SUB-CONTAINERS>
              <ECUC-CONTAINER-VALUE>
```

```
      <SHORT-NAME>OsBaseSocket_AHB</SHORT-NAME>
      <DEFINITION-REF DEST="ECUC-PARAM-CONF-CONTAINER-
          DEF">/AUTOSAR/EcucDefs/SwCluC/SwCluCProxies/
          SwCluCOsProxy/SwCluCOsProxyOsBaseSocket</
          DEFINITION-REF>
      <REFERENCE-VALUES>
        <ECUC-REFERENCE-VALUE>
          <DEFINITION-REF DEST="ECUC-FOREIGN-REFERENCE-
              DEF">/AUTOSAR/EcucDefs/SwCluC/
              SwCluCProxies/SwCluCOsProxy/
              SwCluCOsProxyOsBaseSocket/
              SwCluCResourceRef</DEFINITION-REF>
          <VALUE-REF DEST="CP-SOFTWARE-CLUSTER-SERVICE-
              RESOURCE">/AUTOSAR/CONC_670/SysResPool/
              CpSoftwareClusterResourcePools/
              OsResourcePool/OsBaseSocket_AHB</VALUE-REF
              >
        </ECUC-REFERENCE-VALUE>
      </REFERENCE-VALUES>
    </ECUC-CONTAINER-VALUE>
    <ECUC-CONTAINER-VALUE>
      <SHORT-NAME>OsProxyOsT_10ms_Ph1</SHORT-NAME>
      <DEFINITION-REF DEST="ECUC-PARAM-CONF-CONTAINER-
          DEF">/AUTOSAR/EcucDefs/SwCluC/SwCluCProxies/
          SwCluCOsProxy/SwCluCOsProxyOsTask</DEFINITION-
          REF>
      <PARAMETER-VALUES>
        <ECUC-TEXTUAL-PARAM-VALUE>
          <DEFINITION-REF DEST="ECUC-ENUMERATION-PARAM-
              DEF">/AUTOSAR/EcucDefs/SwCluC/
              SwCluCProxies/SwCluCOsProxy/
              SwCluCOsProxyOsTask/
              SwCluCOsProxyTaskActivation</DEFINITION-
              REF>
          <VALUE>OMIT_TASK_ACTIVATION</VALUE>
        </ECUC-TEXTUAL-PARAM-VALUE>
      </PARAMETER-VALUES>
      <REFERENCE-VALUES>
        <ECUC-REFERENCE-VALUE>
          <DEFINITION-REF DEST="ECUC-REFERENCE-DEF">/
              AUTOSAR/EcucDefs/SwCluC/SwCluCProxies/
              SwCluCOsProxy/SwCluCOsProxyOsTask/
              SwCluCOsProxyOsTaskRef</DEFINITION-REF>
          <VALUE-REF DEST="ECUC-CONTAINER-VALUE">/
              AUTOSAR_Os/EcucModuleConfigurationValuess/
              Os/OsTask_10ms_Ph1</VALUE-REF>
        </ECUC-REFERENCE-VALUE>
        <ECUC-REFERENCE-VALUE>
          <DEFINITION-REF DEST="ECUC-FOREIGN-REFERENCE-
              DEF">/AUTOSAR/EcucDefs/SwCluC/
              SwCluCProxies/SwCluCOsProxy/
              SwCluCOsProxyOsTask/SwCluCResourceRef</
              DEFINITION-REF>
```

```
        <VALUE-REF DEST="CP-SOFTWARE-CLUSTER-SERVICE-
            RESOURCE">/AUTOSAR/CONC_670/SysResPool/
            CpSoftwareClusterResourcePools/
            OsResourcePool/OsProxyOsT_10ms_Ph1</VALUE-
            REF>
      </ECUC-REFERENCE-VALUE>
    </REFERENCE-VALUES>
  </ECUC-CONTAINER-VALUE>
  <ECUC-CONTAINER-VALUE>
    <SHORT-NAME>OsProxyOsT_10ms_Ph2</SHORT-NAME>
    <DEFINITION-REF DEST="ECUC-PARAM-CONF-CONTAINER-
        DEF">/AUTOSAR/EcucDefs/SwCluC/SwCluCProxies/
        SwCluCOsProxy/SwCluCOsProxyOsTask</DEFINITION-
        REF>
    <PARAMETER-VALUES>
      <ECUC-TEXTUAL-PARAM-VALUE>
        <DEFINITION-REF DEST="ECUC-ENUMERATION-PARAM-
            DEF">/AUTOSAR/EcucDefs/SwCluC/
            SwCluCProxies/SwCluCOsProxy/
            SwCluCOsProxyOsTask/
            SwCluCOsProxyTaskActivation</DEFINITION-
            REF>
        <VALUE>OMIT_TASK_ACTIVATION</VALUE>
      </ECUC-TEXTUAL-PARAM-VALUE>
    </PARAMETER-VALUES>
    <REFERENCE-VALUES>
      <ECUC-REFERENCE-VALUE>
        <DEFINITION-REF DEST="ECUC-REFERENCE-DEF">/
            AUTOSAR/EcucDefs/SwCluC/SwCluCProxies/
            SwCluCOsProxy/SwCluCOsProxyOsTask/
            SwCluCOsProxyOsTaskRef</DEFINITION-REF>
        <VALUE-REF DEST="ECUC-CONTAINER-VALUE">/
            AUTOSAR_Os/EcucModuleConfigurationValuess/
            Os/OsTask_10ms_Ph2</VALUE-REF>
      </ECUC-REFERENCE-VALUE>
      <ECUC-REFERENCE-VALUE>
        <DEFINITION-REF DEST="ECUC-FOREIGN-REFERENCE-
            DEF">/AUTOSAR/EcucDefs/SwCluC/
            SwCluCProxies/SwCluCOsProxy/
            SwCluCOsProxyOsTask/SwCluCResourceRef</
            DEFINITION-REF>
        <VALUE-REF DEST="CP-SOFTWARE-CLUSTER-SERVICE-
            RESOURCE">/AUTOSAR/CONC_670/SysResPool/
            CpSoftwareClusterResourcePools/
            OsResourcePool/OsProxyOsT_10ms_Ph2</VALUE-
            REF>
      </ECUC-REFERENCE-VALUE>
    </REFERENCE-VALUES>
  </ECUC-CONTAINER-VALUE>
  <ECUC-CONTAINER-VALUE>
    <SHORT-NAME>OsProxyOsT_50ms</SHORT-NAME>
    <DEFINITION-REF DEST="ECUC-PARAM-CONF-CONTAINER-
        DEF">/AUTOSAR/EcucDefs/SwCluC/SwCluCProxies/
        SwCluCOsProxy/SwCluCOsProxyOsTask</DEFINITION-
        REF>
    <PARAMETER-VALUES>
```

```
            <ECUC-TEXTUAL-PARAM-VALUE>
              <DEFINITION-REF DEST="ECUC-ENUMERATION-PARAM-
                  DEF">/AUTOSAR/EcucDefs/SwCluC/
                  SwCluCProxies/SwCluCOsProxy/
                  SwCluCOsProxyOsTask/
                  SwCluCOsProxyTaskActivation</DEFINITION-
                  REF>
              <VALUE>OMIT_TASK_ACTIVATION</VALUE>
            </ECUC-TEXTUAL-PARAM-VALUE>
          </PARAMETER-VALUES>
          <REFERENCE-VALUES>
            <ECUC-REFERENCE-VALUE>
              <DEFINITION-REF DEST="ECUC-REFERENCE-DEF">/
                  AUTOSAR/EcucDefs/SwCluC/SwCluCProxies/
                  SwCluCOsProxy/SwCluCOsProxyOsTask/
                  SwCluCOsProxyOsTaskRef</DEFINITION-REF>
              <VALUE-REF DEST="ECUC-CONTAINER-VALUE">/
                  AUTOSAR_Os/EcucModuleConfigurationValuess/
                  Os/OsTask_50ms</VALUE-REF>
            </ECUC-REFERENCE-VALUE>
            <ECUC-REFERENCE-VALUE>
              <DEFINITION-REF DEST="ECUC-FOREIGN-REFERENCE-
                  DEF">/AUTOSAR/EcucDefs/SwCluC/
                  SwCluCProxies/SwCluCOsProxy/
                  SwCluCOsProxyOsTask/SwCluCResourceRef</
                  DEFINITION-REF>
              <VALUE-REF DEST="CP-SOFTWARE-CLUSTER-SERVICE-
                  RESOURCE">/AUTOSAR/CONC_670/SysResPool/
                  CpSoftwareClusterResourcePools/
                  OsResourcePool/OsProxyOsT_50ms</VALUE-REF>
            </ECUC-REFERENCE-VALUE>
          </REFERENCE-VALUES>
        </ECUC-CONTAINER-VALUE>
      </SUB-CONTAINERS>
    </ECUC-CONTAINER-VALUE>
  </SUB-CONTAINERS>
</ECUC-CONTAINER-VALUE>
<ECUC-CONTAINER-VALUE>
  <SHORT-NAME>SwCluCBManif</SHORT-NAME>
  <DEFINITION-REF DEST="ECUC-PARAM-CONF-CONTAINER-DEF">/
      AUTOSAR/EcucDefs/SwCluC/SwCluCBManif</DEFINITION-REF>
  <PARAMETER-VALUES>
    <ECUC-NUMERICAL-PARAM-VALUE>
      <DEFINITION-REF DEST="ECUC-INTEGER-PARAM-DEF">/
          AUTOSAR/EcucDefs/SwCluC/SwCluCBManif/
          SwCluCBManifImmutableTablesChecksum</DEFINITION-
          REF>
      <VALUE>3235822270</VALUE>
    </ECUC-NUMERICAL-PARAM-VALUE>
    <ECUC-NUMERICAL-PARAM-VALUE>
      <DEFINITION-REF DEST="ECUC-INTEGER-PARAM-DEF">/
          AUTOSAR/EcucDefs/SwCluC/SwCluCBManif/
          SwCluCBManifSubscribedInterfaceValidityMarker</
          DEFINITION-REF>
      <VALUE>4294967295</VALUE>
    </ECUC-NUMERICAL-PARAM-VALUE>
```

```
</PARAMETER-VALUES>
<SUB-CONTAINERS>
  <ECUC-CONTAINER-VALUE>
    <SHORT-NAME>rBaseConfigCheck</SHORT-NAME>
    <DEFINITION-REF DEST="ECUC-PARAM-CONF-CONTAINER-DEF">
       /AUTOSAR/EcucDefs/SwCluC/SwCluCBManif/
       SwCluCBManifRequireResourceEntryGroup</DEFINITION-
       REF>
    <REFERENCE-VALUES>
      <ECUC-REFERENCE-VALUE>
        <DEFINITION-REF DEST="ECUC-REFERENCE-DEF">/
           AUTOSAR/EcucDefs/SwCluC/SwCluCBManif/
           SwCluCBManifRequireResourceEntryGroup/
           SwCluCBManifResourceTypeRef</DEFINITION-REF>
        <VALUE-REF DEST="ECUC-CONTAINER-VALUE">/
           AUTOSAR_SwCluC/EcucModuleConfigurationValuess/
           SwCluC/SwCluCBManif/BaseConfigCheck</VALUE-REF
           >
      </ECUC-REFERENCE-VALUE>
    </REFERENCE-VALUES>
    <SUB-CONTAINERS>
      <ECUC-CONTAINER-VALUE>
        <SHORT-NAME>BaseConfigCheck_AHB</SHORT-NAME>
        <DEFINITION-REF DEST="ECUC-PARAM-CONF-CONTAINER-
           DEF">/AUTOSAR/EcucDefs/SwCluC/SwCluCBManif/
           SwCluCBManifRequireResourceEntryGroup/
           SwCluCBManifRequireResourceEntry</DEFINITION-
           REF>
        <PARAMETER-VALUES>
          <ECUC-TEXTUAL-PARAM-VALUE>
            <DEFINITION-REF DEST="ECUC-STRING-PARAM-DEF">
               /AUTOSAR/EcucDefs/SwCluC/SwCluCBManif/
               SwCluCBManifRequireResourceEntryGroup/
               SwCluCBManifRequireResourceEntry/
               SwCluCBManifDefaultProvideSymbol</
               DEFINITION-REF>
            <VALUE>Checksum</VALUE>
          </ECUC-TEXTUAL-PARAM-VALUE>
          <ECUC-NUMERICAL-PARAM-VALUE>
            <DEFINITION-REF DEST="ECUC-BOOLEAN-PARAM-DEF"
               >/AUTOSAR/EcucDefs/SwCluC/SwCluCBManif/
               SwCluCBManifRequireResourceEntryGroup/
               SwCluCBManifRequireResourceEntry/
               SwCluCBManifIsMandatory</DEFINITION-REF>
            <VALUE>true</VALUE>
          </ECUC-NUMERICAL-PARAM-VALUE>
          <ECUC-NUMERICAL-PARAM-VALUE>
            <DEFINITION-REF DEST="ECUC-INTEGER-PARAM-DEF"
               >/AUTOSAR/EcucDefs/SwCluC/SwCluCBManif/
               SwCluCBManifRequireResourceEntryGroup/
               SwCluCBManifRequireResourceEntry/
               SwCluCBManifResourceGuardValue</DEFINITION
               -REF>
            <VALUE>98217643</VALUE>
          </ECUC-NUMERICAL-PARAM-VALUE>
        </PARAMETER-VALUES>
```

```
      <REFERENCE-VALUES>
        <ECUC-REFERENCE-VALUE>
          <DEFINITION-REF DEST="ECUC-FOREIGN-REFERENCE-
              DEF">/AUTOSAR/EcucDefs/SwCluC/SwCluCBManif
              /SwCluCBManifRequireResourceEntryGroup/
              SwCluCBManifRequireResourceEntry/
              SwCluCBManifResourceRef</DEFINITION-REF>
          <VALUE-REF DEST="CP-SOFTWARE-CLUSTER-SERVICE-
              RESOURCE">/AUTOSAR/CONC_670/SysResPool/
              CpSoftwareClusterResourcePools/
              SwClusCResourcePool/BaseConfigCheck_AHB</
              VALUE-REF>
        </ECUC-REFERENCE-VALUE>
      </REFERENCE-VALUES>
    </ECUC-CONTAINER-VALUE>
    <ECUC-CONTAINER-VALUE>
      <SHORT-NAME>OsBaseConfigCheck_AHB</SHORT-NAME>
      <DEFINITION-REF DEST="ECUC-PARAM-CONF-CONTAINER-
          DEF">/AUTOSAR/EcucDefs/SwCluC/SwCluCBManif/
          SwCluCBManifRequireResourceEntryGroup/
          SwCluCBManifRequireResourceEntry</DEFINITION-
          REF>
      <PARAMETER-VALUES>
        <ECUC-NUMERICAL-PARAM-VALUE>
          <DEFINITION-REF DEST="ECUC-BOOLEAN-PARAM-DEF"
              >/AUTOSAR/EcucDefs/SwCluC/SwCluCBManif/
              SwCluCBManifRequireResourceEntryGroup/
              SwCluCBManifRequireResourceEntry/
              SwCluCBManifIsMandatory</DEFINITION-REF>
          <VALUE>true</VALUE>
        </ECUC-NUMERICAL-PARAM-VALUE>
        <ECUC-NUMERICAL-PARAM-VALUE>
          <DEFINITION-REF DEST="ECUC-INTEGER-PARAM-DEF"
              >/AUTOSAR/EcucDefs/SwCluC/SwCluCBManif/
              SwCluCBManifRequireResourceEntryGroup/
              SwCluCBManifRequireResourceEntry/
              SwCluCBManifResourceGuardValue</DEFINITION
              -REF>
          <VALUE>668665900</VALUE>
        </ECUC-NUMERICAL-PARAM-VALUE>
        <ECUC-TEXTUAL-PARAM-VALUE>
          <DEFINITION-REF DEST="ECUC-STRING-PARAM-DEF">
              /AUTOSAR/EcucDefs/SwCluC/SwCluCBManif/
              SwCluCBManifRequireResourceEntryGroup/
              SwCluCBManifRequireResourceEntry/
              SwCluCBManifDefaultProvideSymbol</
              DEFINITION-REF>
          <VALUE>0</VALUE>
        </ECUC-TEXTUAL-PARAM-VALUE>
      </PARAMETER-VALUES>
      <REFERENCE-VALUES>
        <ECUC-REFERENCE-VALUE>
```

```
            <DEFINITION-REF DEST="ECUC-FOREIGN-REFERENCE-
                DEF">/AUTOSAR/EcucDefs/SwCluC/SwCluCBManif
                /SwCluCBManifRequireResourceEntryGroup/
                SwCluCBManifRequireResourceEntry/
                SwCluCBManifResourceRef</DEFINITION-REF>
            <VALUE-REF DEST="CP-SOFTWARE-CLUSTER-SERVICE-
                RESOURCE">/AUTOSAR/CONC_670/SysResPool/
                CpSoftwareClusterResourcePools/
                SwClusCResourcePool/OsBaseConfigCheck_AHB<
                /VALUE-REF>
          </ECUC-REFERENCE-VALUE>
        </REFERENCE-VALUES>
      </ECUC-CONTAINER-VALUE>
    </SUB-CONTAINERS>
  </ECUC-CONTAINER-VALUE>
  <ECUC-CONTAINER-VALUE>
    <SHORT-NAME>rXccBaseSocket</SHORT-NAME>
    <DEFINITION-REF DEST="ECUC-PARAM-CONF-CONTAINER-DEF">
      /AUTOSAR/EcucDefs/SwCluC/SwCluCBManif/
      SwCluCBManifRequireResourceEntryGroup</DEFINITION-
      REF>
    <REFERENCE-VALUES>
      <ECUC-REFERENCE-VALUE>
        <DEFINITION-REF DEST="ECUC-REFERENCE-DEF">/
          AUTOSAR/EcucDefs/SwCluC/SwCluCBManif/
          SwCluCBManifRequireResourceEntryGroup/
          SwCluCBManifResourceTypeRef</DEFINITION-REF>
        <VALUE-REF DEST="ECUC-CONTAINER-VALUE">/
          AUTOSAR_SwCluC/EcucModuleConfigurationValuess/
          SwCluC/SwCluCBManif/XccBaseSocket</VALUE-REF>
      </ECUC-REFERENCE-VALUE>
    </REFERENCE-VALUES>
    <SUB-CONTAINERS>
      <ECUC-CONTAINER-VALUE>
        <SHORT-NAME>XccBaseSocket_AHB</SHORT-NAME>
        <DEFINITION-REF DEST="ECUC-PARAM-CONF-CONTAINER-
          DEF">/AUTOSAR/EcucDefs/SwCluC/SwCluCBManif/
          SwCluCBManifRequireResourceEntryGroup/
          SwCluCBManifRequireResourceEntry</DEFINITION-
          REF>
        <PARAMETER-VALUES>
          <ECUC-TEXTUAL-PARAM-VALUE>
            <DEFINITION-REF DEST="ECUC-STRING-PARAM-DEF">
              /AUTOSAR/EcucDefs/SwCluC/SwCluCBManif/
              SwCluCBManifRequireResourceEntryGroup/
              SwCluCBManifRequireResourceEntry/
              SwCluCBManifDefaultProvideSymbol</
              DEFINITION-REF>
            <VALUE>SwCluC_Xcc_SysCallDefault</VALUE>
          </ECUC-TEXTUAL-PARAM-VALUE>
          <ECUC-TEXTUAL-PARAM-VALUE>
```

```
            <DEFINITION-REF DEST="ECUC-STRING-PARAM-DEF">
              /AUTOSAR/EcucDefs/SwCluC/SwCluCBManif/
              SwCluCBManifRequireResourceEntryGroup/
              SwCluCBManifRequireResourceEntry/
              SwCluCBManifNotifierSymbol</DEFINITION-REF
              >
            <VALUE>SwCluC_Xcc_SysCallNotifier</VALUE>
          </ECUC-TEXTUAL-PARAM-VALUE>
          <ECUC-NUMERICAL-PARAM-VALUE>
            <DEFINITION-REF DEST="ECUC-INTEGER-PARAM-DEF"
              >/AUTOSAR/EcucDefs/SwCluC/SwCluCBManif/
              SwCluCBManifRequireResourceEntryGroup/
              SwCluCBManifRequireResourceEntry/
              SwCluCBManifResourceGuardValue</DEFINITION
              -REF>
            <VALUE>12345678</VALUE>
          </ECUC-NUMERICAL-PARAM-VALUE>
          <ECUC-NUMERICAL-PARAM-VALUE>
            <DEFINITION-REF DEST="ECUC-BOOLEAN-PARAM-DEF"
              >/AUTOSAR/EcucDefs/SwCluC/SwCluCBManif/
              SwCluCBManifRequireResourceEntryGroup/
              SwCluCBManifRequireResourceEntry/
              SwCluCBManifIsMandatory</DEFINITION-REF>
            <VALUE>true</VALUE>
          </ECUC-NUMERICAL-PARAM-VALUE>
        </PARAMETER-VALUES>
        <REFERENCE-VALUES>
          <ECUC-REFERENCE-VALUE>
            <DEFINITION-REF DEST="ECUC-FOREIGN-REFERENCE-
              DEF">/AUTOSAR/EcucDefs/SwCluC/SwCluCBManif
              /SwCluCBManifRequireResourceEntryGroup/
              SwCluCBManifRequireResourceEntry/
              SwCluCBManifResourceRef</DEFINITION-REF>
            <VALUE-REF DEST="CP-SOFTWARE-CLUSTER-SERVICE-
              RESOURCE">/AUTOSAR/CONC_670/SysResPool/
              CpSoftwareClusterResourcePools/
              SwClusCResourcePool/XccBaseSocket_AHB</
              VALUE-REF>
          </ECUC-REFERENCE-VALUE>
        </REFERENCE-VALUES>
      </ECUC-CONTAINER-VALUE>
    </SUB-CONTAINERS>
  </ECUC-CONTAINER-VALUE>
  <ECUC-CONTAINER-VALUE>
    <SHORT-NAME>pXccBasicSR</SHORT-NAME>
    <DEFINITION-REF DEST="ECUC-PARAM-CONF-CONTAINER-DEF">
      /AUTOSAR/EcucDefs/SwCluC/SwCluCBManif/
      SwCluCBManifProvideResourceEntryGroup</DEFINITION-
      REF>
    <PARAMETER-VALUES>
      <ECUC-TEXTUAL-PARAM-VALUE>
        <DEFINITION-REF DEST="ECUC-ENUMERATION-PARAM-DEF"
          >/AUTOSAR/EcucDefs/SwCluC/SwCluCBManif/
          SwCluCBManifProvideResourceEntryGroup/
          SwCluCBManifMultipleNotifierSupport</
          DEFINITION-REF>
```

```
      <VALUE>SINGLE_NOTIFIER_SET</VALUE>
    </ECUC-TEXTUAL-PARAM-VALUE>
  </PARAMETER-VALUES>
  <REFERENCE-VALUES>
    <ECUC-REFERENCE-VALUE>
      <DEFINITION-REF DEST="ECUC-REFERENCE-DEF">/
          AUTOSAR/EcucDefs/SwCluC/SwCluCBManif/
          SwCluCBManifProvideResourceEntryGroup/
          SwCluCBManifResourceTypeRef</DEFINITION-REF>
      <VALUE-REF DEST="ECUC-CONTAINER-VALUE">/
          AUTOSAR_SwCluC/EcucModuleConfigurationValuess/
          SwCluC/SwCluCBManif/XccBasicSR</VALUE-REF>
    </ECUC-REFERENCE-VALUE>
  </REFERENCE-VALUES>
  <SUB-CONTAINERS>
    <ECUC-CONTAINER-VALUE>
      <SHORT-NAME>Anton</SHORT-NAME>
      <DEFINITION-REF DEST="ECUC-PARAM-CONF-CONTAINER-
          DEF">/AUTOSAR/EcucDefs/SwCluC/SwCluCBManif/
          SwCluCBManifProvideResourceEntryGroup/
          SwCluCBManifProvideResourceEntry</DEFINITION-
          REF>
      <PARAMETER-VALUES>
        <ECUC-NUMERICAL-PARAM-VALUE>
          <DEFINITION-REF DEST="ECUC-INTEGER-PARAM-DEF"
              >/AUTOSAR/EcucDefs/SwCluC/SwCluCBManif/
              SwCluCBManifProvideResourceEntryGroup/
              SwCluCBManifProvideResourceEntry/
              SwCluCBManifResourceGuardValue</DEFINITION
              -REF>
            <VALUE>122145</VALUE>
        </ECUC-NUMERICAL-PARAM-VALUE>
        <ECUC-TEXTUAL-PARAM-VALUE>
          <DEFINITION-REF DEST="ECUC-STRING-PARAM-DEF">
              /AUTOSAR/EcucDefs/SwCluC/SwCluCBManif/
              SwCluCBManifProvideResourceEntryGroup/
              SwCluCBManifProvideResourceEntry/
              SwCluCBManifProvideSymbol</DEFINITION-REF>
            <VALUE>SwCluC_Xcc_Buffer_Anton</VALUE>
        </ECUC-TEXTUAL-PARAM-VALUE>
      </PARAMETER-VALUES>
      <REFERENCE-VALUES>
        <ECUC-REFERENCE-VALUE>
          <DEFINITION-REF DEST="ECUC-FOREIGN-REFERENCE-
              DEF">/AUTOSAR/EcucDefs/SwCluC/SwCluCBManif
              /SwCluCBManifProvideResourceEntryGroup/
              SwCluCBManifProvideResourceEntry/
              SwCluCBManifResourceRef</DEFINITION-REF>
          <VALUE-REF DEST="CP-SOFTWARE-CLUSTER-
              COMMUNICATION-RESOURCE">/AUTOSAR/CONC_670/
              SysResPool/CpSoftwareClusterResourcePools/
              ComResourcePool/Anton</VALUE-REF>
        </ECUC-REFERENCE-VALUE>
      </REFERENCE-VALUES>
    </ECUC-CONTAINER-VALUE>
    <ECUC-CONTAINER-VALUE>
```

```
            <SHORT-NAME>Bernd</SHORT-NAME>
            <DEFINITION-REF DEST="ECUC-PARAM-CONF-CONTAINER-
                DEF">/AUTOSAR/EcucDefs/SwCluC/SwCluCBManif/
                SwCluCBManifProvideResourceEntryGroup/
                SwCluCBManifProvideResourceEntry</DEFINITION-
                REF>
            <PARAMETER-VALUES>
              <ECUC-NUMERICAL-PARAM-VALUE>
                <DEFINITION-REF DEST="ECUC-INTEGER-PARAM-DEF"
                    >/AUTOSAR/EcucDefs/SwCluC/SwCluCBManif/
                    SwCluCBManifProvideResourceEntryGroup/
                    SwCluCBManifProvideResourceEntry/
                    SwCluCBManifResourceGuardValue</DEFINITION
                    -REF>
                <VALUE>123645</VALUE>
              </ECUC-NUMERICAL-PARAM-VALUE>
              <ECUC-TEXTUAL-PARAM-VALUE>
                <DEFINITION-REF DEST="ECUC-STRING-PARAM-DEF">
                    /AUTOSAR/EcucDefs/SwCluC/SwCluCBManif/
                    SwCluCBManifProvideResourceEntryGroup/
                    SwCluCBManifProvideResourceEntry/
                    SwCluCBManifProvideSymbol</DEFINITION-REF>
                <VALUE>SwCluC_Xcc_Buffer_Bernd</VALUE>
              </ECUC-TEXTUAL-PARAM-VALUE>
            </PARAMETER-VALUES>
            <REFERENCE-VALUES>
              <ECUC-REFERENCE-VALUE>
                <DEFINITION-REF DEST="ECUC-FOREIGN-REFERENCE-
                    DEF">/AUTOSAR/EcucDefs/SwCluC/SwCluCBManif
                    /SwCluCBManifProvideResourceEntryGroup/
                    SwCluCBManifProvideResourceEntry/
                    SwCluCBManifResourceRef</DEFINITION-REF>
                <VALUE-REF DEST="CP-SOFTWARE-CLUSTER-
                    COMMUNICATION-RESOURCE">/AUTOSAR/CONC_670/
                    SysResPool/CpSoftwareClusterResourcePools/
                    ComResourcePool/Bernd</VALUE-REF>
              </ECUC-REFERENCE-VALUE>
            </REFERENCE-VALUES>
          </ECUC-CONTAINER-VALUE>
        </SUB-CONTAINERS>
      </ECUC-CONTAINER-VALUE>
      <ECUC-CONTAINER-VALUE>
        <SHORT-NAME>rXccBasicSR</SHORT-NAME>
        <DEFINITION-REF DEST="ECUC-PARAM-CONF-CONTAINER-DEF">
            /AUTOSAR/EcucDefs/SwCluC/SwCluCBManif/
            SwCluCBManifRequireResourceEntryGroup</DEFINITION-
            REF>
        <REFERENCE-VALUES>
          <ECUC-REFERENCE-VALUE>
            <DEFINITION-REF DEST="ECUC-REFERENCE-DEF">/
                AUTOSAR/EcucDefs/SwCluC/SwCluCBManif/
                SwCluCBManifRequireResourceEntryGroup/
                SwCluCBManifResourceTypeRef</DEFINITION-REF>
            <VALUE-REF DEST="ECUC-CONTAINER-VALUE">/
                AUTOSAR_SwCluC/EcucModuleConfigurationValuess/
                SwCluC/SwCluCBManif/XccBasicSR</VALUE-REF>
```

```
        </ECUC-REFERENCE-VALUE>
      </REFERENCE-VALUES>
      <SUB-CONTAINERS>
        <ECUC-CONTAINER-VALUE>
          <SHORT-NAME>Celine</SHORT-NAME>
          <DEFINITION-REF DEST="ECUC-PARAM-CONF-CONTAINER-
              DEF">/AUTOSAR/EcucDefs/SwCluC/SwCluCBManif/
              SwCluCBManifRequireResourceEntryGroup/
              SwCluCBManifRequireResourceEntry</DEFINITION-
              REF>
          <PARAMETER-VALUES>
            <ECUC-NUMERICAL-PARAM-VALUE>
              <DEFINITION-REF DEST="ECUC-BOOLEAN-PARAM-DEF"
                  >/AUTOSAR/EcucDefs/SwCluC/SwCluCBManif/
                  SwCluCBManifRequireResourceEntryGroup/
                  SwCluCBManifRequireResourceEntry/
                  SwCluCBManifIsMandatory</DEFINITION-REF>
              <VALUE>false</VALUE>
            </ECUC-NUMERICAL-PARAM-VALUE>
            <ECUC-NUMERICAL-PARAM-VALUE>
              <DEFINITION-REF DEST="ECUC-INTEGER-PARAM-DEF"
                  >/AUTOSAR/EcucDefs/SwCluC/SwCluCBManif/
                  SwCluCBManifRequireResourceEntryGroup/
                  SwCluCBManifRequireResourceEntry/
                  SwCluCBManifResourceGuardValue</DEFINITION
                  -REF>
              <VALUE>433177199</VALUE>
            </ECUC-NUMERICAL-PARAM-VALUE>
            <ECUC-TEXTUAL-PARAM-VALUE>
              <DEFINITION-REF DEST="ECUC-STRING-PARAM-DEF">
                  /AUTOSAR/EcucDefs/SwCluC/SwCluCBManif/
                  SwCluCBManifRequireResourceEntryGroup/
                  SwCluCBManifRequireResourceEntry/
                  SwCluCBManifDefaultProvideSymbol</
                  DEFINITION-REF>
              <VALUE>SwCluC_Xcc_Default_Celine</VALUE>
            </ECUC-TEXTUAL-PARAM-VALUE>
          </PARAMETER-VALUES>
          <REFERENCE-VALUES>
            <ECUC-REFERENCE-VALUE>
              <DEFINITION-REF DEST="ECUC-FOREIGN-REFERENCE-
                  DEF">/AUTOSAR/EcucDefs/SwCluC/SwCluCBManif
                  /SwCluCBManifRequireResourceEntryGroup/
                  SwCluCBManifRequireResourceEntry/
                  SwCluCBManifResourceRef</DEFINITION-REF>
              <VALUE-REF DEST="CP-SOFTWARE-CLUSTER-
                  COMMUNICATION-RESOURCE">/AUTOSAR/CONC_670/
                  SysResPool/CpSoftwareClusterResourcePools/
                  ComResourcePool/Celine</VALUE-REF>
            </ECUC-REFERENCE-VALUE>
          </REFERENCE-VALUES>
        </ECUC-CONTAINER-VALUE>
      </SUB-CONTAINERS>
    </ECUC-CONTAINER-VALUE>
    <ECUC-CONTAINER-VALUE>
      <SHORT-NAME>rOsBaseSocket</SHORT-NAME>
```

```
<DEFINITION-REF DEST="ECUC-PARAM-CONF-CONTAINER-DEF">
    /AUTOSAR/EcucDefs/SwCluC/SwCluCBManif/
    SwCluCBManifRequireResourceEntryGroup</DEFINITION-
    REF>
<REFERENCE-VALUES>
  <ECUC-REFERENCE-VALUE>
    <DEFINITION-REF DEST="ECUC-REFERENCE-DEF">/
        AUTOSAR/EcucDefs/SwCluC/SwCluCBManif/
        SwCluCBManifRequireResourceEntryGroup/
        SwCluCBManifResourceTypeRef</DEFINITION-REF>
    <VALUE-REF DEST="ECUC-CONTAINER-VALUE">/
        AUTOSAR_SwCluC/EcucModuleConfigurationValuess/
        SwCluC/SwCluCBManif/OsBaseSocket</VALUE-REF>
  </ECUC-REFERENCE-VALUE>
</REFERENCE-VALUES>
<SUB-CONTAINERS>
  <ECUC-CONTAINER-VALUE>
    <SHORT-NAME>OsBaseSocket_AHB</SHORT-NAME>
    <DEFINITION-REF DEST="ECUC-PARAM-CONF-CONTAINER-
        DEF">/AUTOSAR/EcucDefs/SwCluC/SwCluCBManif/
        SwCluCBManifRequireResourceEntryGroup/
        SwCluCBManifRequireResourceEntry</DEFINITION-
        REF>
    <PARAMETER-VALUES>
      <ECUC-TEXTUAL-PARAM-VALUE>
        <DEFINITION-REF DEST="ECUC-STRING-PARAM-DEF">
            /AUTOSAR/EcucDefs/SwCluC/SwCluCBManif/
            SwCluCBManifRequireResourceEntryGroup/
            SwCluCBManifRequireResourceEntry/
            SwCluCBManifNotifierSymbol</DEFINITION-REF
            >
        <VALUE>SwCluC_OsProxy_SysCallNotifier</VALUE>
      </ECUC-TEXTUAL-PARAM-VALUE>
      <ECUC-NUMERICAL-PARAM-VALUE>
        <DEFINITION-REF DEST="ECUC-BOOLEAN-PARAM-DEF"
            >/AUTOSAR/EcucDefs/SwCluC/SwCluCBManif/
            SwCluCBManifRequireResourceEntryGroup/
            SwCluCBManifRequireResourceEntry/
            SwCluCBManifIsMandatory</DEFINITION-REF>
        <VALUE>true</VALUE>
      </ECUC-NUMERICAL-PARAM-VALUE>
      <ECUC-NUMERICAL-PARAM-VALUE>
        <DEFINITION-REF DEST="ECUC-INTEGER-PARAM-DEF"
            >/AUTOSAR/EcucDefs/SwCluC/SwCluCBManif/
            SwCluCBManifRequireResourceEntryGroup/
            SwCluCBManifRequireResourceEntry/
            SwCluCBManifResourceGuardValue</DEFINITION
            -REF>
        <VALUE>89127834</VALUE>
      </ECUC-NUMERICAL-PARAM-VALUE>
      <ECUC-TEXTUAL-PARAM-VALUE>
```

```
                <DEFINITION-REF DEST="ECUC-STRING-PARAM-DEF">
                    /AUTOSAR/EcucDefs/SwCluC/SwCluCBManif/
                    SwCluCBManifRequireResourceEntryGroup/
                    SwCluCBManifRequireResourceEntry/
                    SwCluCBManifDefaultProvideSymbol</
                    DEFINITION-REF>
                <VALUE>&amp;
                    SwCluC_OsProxy_defaultActivateTask</VALUE>
              </ECUC-TEXTUAL-PARAM-VALUE>
            </PARAMETER-VALUES>
            <REFERENCE-VALUES>
              <ECUC-REFERENCE-VALUE>
                <DEFINITION-REF DEST="ECUC-FOREIGN-REFERENCE-
                    DEF">/AUTOSAR/EcucDefs/SwCluC/SwCluCBManif
                    /SwCluCBManifRequireResourceEntryGroup/
                    SwCluCBManifRequireResourceEntry/
                    SwCluCBManifResourceRef</DEFINITION-REF>
                <VALUE-REF DEST="CP-SOFTWARE-CLUSTER-SERVICE-
                    RESOURCE">/AUTOSAR/CONC_670/SysResPool/
                    CpSoftwareClusterResourcePools/
                    OsResourcePool/OsBaseSocket_AHB</VALUE-REF
                    >
              </ECUC-REFERENCE-VALUE>
            </REFERENCE-VALUES>
          </ECUC-CONTAINER-VALUE>
        </SUB-CONTAINERS>
      </ECUC-CONTAINER-VALUE>
      <ECUC-CONTAINER-VALUE>
        <SHORT-NAME>rOsProxyOsTask</SHORT-NAME>
        <DEFINITION-REF DEST="ECUC-PARAM-CONF-CONTAINER-DEF">
            /AUTOSAR/EcucDefs/SwCluC/SwCluCBManif/
            SwCluCBManifRequireResourceEntryGroup</DEFINITION-
            REF>
        <REFERENCE-VALUES>
          <ECUC-REFERENCE-VALUE>
            <DEFINITION-REF DEST="ECUC-REFERENCE-DEF">/
                AUTOSAR/EcucDefs/SwCluC/SwCluCBManif/
                SwCluCBManifRequireResourceEntryGroup/
                SwCluCBManifResourceTypeRef</DEFINITION-REF>
            <VALUE-REF DEST="ECUC-CONTAINER-VALUE">/
                AUTOSAR_SwCluC/EcucModuleConfigurationValuess/
                SwCluC/SwCluCBManif/OsProxyOsTask</VALUE-REF>
          </ECUC-REFERENCE-VALUE>
        </REFERENCE-VALUES>
        <SUB-CONTAINERS>
          <ECUC-CONTAINER-VALUE>
            <SHORT-NAME>OsProxyOsT_10ms_Ph1</SHORT-NAME>
            <DEFINITION-REF DEST="ECUC-PARAM-CONF-CONTAINER-
                DEF">/AUTOSAR/EcucDefs/SwCluC/SwCluCBManif/
                SwCluCBManifRequireResourceEntryGroup/
                SwCluCBManifRequireResourceEntry</DEFINITION-
                REF>
            <PARAMETER-VALUES>
              <ECUC-NUMERICAL-PARAM-VALUE>
```

```
        <DEFINITION-REF DEST="ECUC-BOOLEAN-PARAM-DEF"
            >/AUTOSAR/EcucDefs/SwCluC/SwCluCBManif/
            SwCluCBManifRequireResourceEntryGroup/
            SwCluCBManifRequireResourceEntry/
            SwCluCBManifIsMandatory</DEFINITION-REF>
        <VALUE>true</VALUE>
      </ECUC-NUMERICAL-PARAM-VALUE>
      <ECUC-NUMERICAL-PARAM-VALUE>
        <DEFINITION-REF DEST="ECUC-INTEGER-PARAM-DEF"
            >/AUTOSAR/EcucDefs/SwCluC/SwCluCBManif/
            SwCluCBManifRequireResourceEntryGroup/
            SwCluCBManifRequireResourceEntry/
            SwCluCBManifResourceGuardValue</DEFINITION
            -REF>
        <VALUE>456767</VALUE>
      </ECUC-NUMERICAL-PARAM-VALUE>
      <ECUC-TEXTUAL-PARAM-VALUE>
        <DEFINITION-REF DEST="ECUC-STRING-PARAM-DEF">
            /AUTOSAR/EcucDefs/SwCluC/SwCluCBManif/
            SwCluCBManifRequireResourceEntryGroup/
            SwCluCBManifRequireResourceEntry/
            SwCluCBManifNotifierSymbol</DEFINITION-REF
            >
        <VALUE>&amp;amp;OsTask_10ms_Ph1</VALUE>
      </ECUC-TEXTUAL-PARAM-VALUE>
    </PARAMETER-VALUES>
    <REFERENCE-VALUES>
      <ECUC-REFERENCE-VALUE>
        <DEFINITION-REF DEST="ECUC-FOREIGN-REFERENCE-
            DEF">/AUTOSAR/EcucDefs/SwCluC/SwCluCBManif
            /SwCluCBManifRequireResourceEntryGroup/
            SwCluCBManifRequireResourceEntry/
            SwCluCBManifResourceRef</DEFINITION-REF>
        <VALUE-REF DEST="CP-SOFTWARE-CLUSTER-SERVICE-
            RESOURCE">/AUTOSAR/CONC_670/SysResPool/
            CpSoftwareClusterResourcePools/
            OsResourcePool/OsProxyOsT_10ms_Ph1</VALUE-
            REF>
      </ECUC-REFERENCE-VALUE>
    </REFERENCE-VALUES>
  </ECUC-CONTAINER-VALUE>
  <ECUC-CONTAINER-VALUE>
    <SHORT-NAME>OsProxyOsT_10ms_Ph2</SHORT-NAME>
    <DEFINITION-REF DEST="ECUC-PARAM-CONF-CONTAINER-
        DEF">/AUTOSAR/EcucDefs/SwCluC/SwCluCBManif/
        SwCluCBManifRequireResourceEntryGroup/
        SwCluCBManifRequireResourceEntry</DEFINITION-
        REF>
    <PARAMETER-VALUES>
      <ECUC-NUMERICAL-PARAM-VALUE>
        <DEFINITION-REF DEST="ECUC-BOOLEAN-PARAM-DEF"
            >/AUTOSAR/EcucDefs/SwCluC/SwCluCBManif/
            SwCluCBManifRequireResourceEntryGroup/
            SwCluCBManifRequireResourceEntry/
            SwCluCBManifIsMandatory</DEFINITION-REF>
        <VALUE>true</VALUE>
```

```
        </ECUC-NUMERICAL-PARAM-VALUE>
        <ECUC-NUMERICAL-PARAM-VALUE>
          <DEFINITION-REF DEST="ECUC-INTEGER-PARAM-DEF"
              >/AUTOSAR/EcucDefs/SwCluC/SwCluCBManif/
              SwCluCBManifRequireResourceEntryGroup/
              SwCluCBManifRequireResourceEntry/
              SwCluCBManifResourceGuardValue</DEFINITION
              -REF>
          <VALUE>456767</VALUE>
        </ECUC-NUMERICAL-PARAM-VALUE>
        <ECUC-TEXTUAL-PARAM-VALUE>
          <DEFINITION-REF DEST="ECUC-STRING-PARAM-DEF">
              /AUTOSAR/EcucDefs/SwCluC/SwCluCBManif/
              SwCluCBManifRequireResourceEntryGroup/
              SwCluCBManifRequireResourceEntry/
              SwCluCBManifNotifierSymbol</DEFINITION-REF
              >
          <VALUE>&amp;amp;OsTask_10ms_Ph2</VALUE>
        </ECUC-TEXTUAL-PARAM-VALUE>
      </PARAMETER-VALUES>
      <REFERENCE-VALUES>
        <ECUC-REFERENCE-VALUE>
          <DEFINITION-REF DEST="ECUC-FOREIGN-REFERENCE-
              DEF">/AUTOSAR/EcucDefs/SwCluC/SwCluCBManif
              /SwCluCBManifRequireResourceEntryGroup/
              SwCluCBManifRequireResourceEntry/
              SwCluCBManifResourceRef</DEFINITION-REF>
          <VALUE-REF DEST="CP-SOFTWARE-CLUSTER-SERVICE-
              RESOURCE">/AUTOSAR/CONC_670/SysResPool/
              CpSoftwareClusterResourcePools/
              OsResourcePool/OsProxyOsT_10ms_Ph2</VALUE-
              REF>
        </ECUC-REFERENCE-VALUE>
      </REFERENCE-VALUES>
    </ECUC-CONTAINER-VALUE>
    <ECUC-CONTAINER-VALUE>
      <SHORT-NAME>OsProxyOsT_50ms</SHORT-NAME>
      <DEFINITION-REF DEST="ECUC-PARAM-CONF-CONTAINER-
          DEF">/AUTOSAR/EcucDefs/SwCluC/SwCluCBManif/
          SwCluCBManifRequireResourceEntryGroup/
          SwCluCBManifRequireResourceEntry</DEFINITION-
          REF>
      <PARAMETER-VALUES>
        <ECUC-NUMERICAL-PARAM-VALUE>
          <DEFINITION-REF DEST="ECUC-BOOLEAN-PARAM-DEF"
              >/AUTOSAR/EcucDefs/SwCluC/SwCluCBManif/
              SwCluCBManifRequireResourceEntryGroup/
              SwCluCBManifRequireResourceEntry/
              SwCluCBManifIsMandatory</DEFINITION-REF>
          <VALUE>true</VALUE>
        </ECUC-NUMERICAL-PARAM-VALUE>
        <ECUC-NUMERICAL-PARAM-VALUE>
```

```
                <DEFINITION-REF DEST="ECUC-INTEGER-PARAM-DEF"
                    >/AUTOSAR/EcucDefs/SwCluC/SwCluCBManif/
                    SwCluCBManifRequireResourceEntryGroup/
                    SwCluCBManifRequireResourceEntry/
                    SwCluCBManifResourceGuardValue</DEFINITION
                    -REF>
                <VALUE>456789</VALUE>
              </ECUC-NUMERICAL-PARAM-VALUE>
              <ECUC-TEXTUAL-PARAM-VALUE>
                <DEFINITION-REF DEST="ECUC-STRING-PARAM-DEF">
                    /AUTOSAR/EcucDefs/SwCluC/SwCluCBManif/
                    SwCluCBManifRequireResourceEntryGroup/
                    SwCluCBManifRequireResourceEntry/
                    SwCluCBManifNotifierSymbol</DEFINITION-REF
                    >
                <VALUE>&amp;OsTask_50ms</VALUE>
              </ECUC-TEXTUAL-PARAM-VALUE>
            </PARAMETER-VALUES>
            <REFERENCE-VALUES>
              <ECUC-REFERENCE-VALUE>
                <DEFINITION-REF DEST="ECUC-FOREIGN-REFERENCE-
                    DEF">/AUTOSAR/EcucDefs/SwCluC/SwCluCBManif
                    /SwCluCBManifRequireResourceEntryGroup/
                    SwCluCBManifRequireResourceEntry/
                    SwCluCBManifResourceRef</DEFINITION-REF>
                <VALUE-REF DEST="CP-SOFTWARE-CLUSTER-SERVICE-
                    RESOURCE">/AUTOSAR/CONC_670/SysResPool/
                    CpSoftwareClusterResourcePools/
                    OsResourcePool/OsProxyOsT_50ms</VALUE-REF>
              </ECUC-REFERENCE-VALUE>
            </REFERENCE-VALUES>
          </ECUC-CONTAINER-VALUE>
        </SUB-CONTAINERS>
      </ECUC-CONTAINER-VALUE>
      <ECUC-CONTAINER-VALUE>
        <SHORT-NAME>BaseConfigCheck</SHORT-NAME>
        <DEFINITION-REF DEST="ECUC-PARAM-CONF-CONTAINER-DEF">
            /AUTOSAR/EcucDefs/SwCluC/SwCluCBManif/
            SwCluCBManifResourceType</DEFINITION-REF>
        <PARAMETER-VALUES>
          <ECUC-NUMERICAL-PARAM-VALUE>
            <DEFINITION-REF DEST="ECUC-INTEGER-PARAM-DEF">/
                AUTOSAR/EcucDefs/SwCluC/SwCluCBManif/
                SwCluCBManifResourceType/
                SwCluCBManifResourceTypeId</DEFINITION-REF>
            <VALUE>255</VALUE>
          </ECUC-NUMERICAL-PARAM-VALUE>
        </PARAMETER-VALUES>
        <SUB-CONTAINERS>
          <ECUC-CONTAINER-VALUE>
            <SHORT-NAME>dummy</SHORT-NAME>
            <DEFINITION-REF DEST="ECUC-PARAM-CONF-CONTAINER-
                DEF">/AUTOSAR/EcucDefs/SwCluC/SwCluCBManif/
                SwCluCBManifResourceType/
                SwCluCBManifProvideHandle</DEFINITION-REF>
            <PARAMETER-VALUES>
```

```
            <ECUC-TEXTUAL-PARAM-VALUE>
              <DEFINITION-REF DEST="ECUC-ENUMERATION-PARAM-
                  DEF">/AUTOSAR/EcucDefs/SwCluC/SwCluCBManif
                  /SwCluCBManifResourceType/
                  SwCluCBManifProvideHandle/
                  SwCluCBManifNativeHandleType</DEFINITION-
                  REF>
              <VALUE>VALUE</VALUE>
            </ECUC-TEXTUAL-PARAM-VALUE>
          </PARAMETER-VALUES>
        </ECUC-CONTAINER-VALUE>
      </SUB-CONTAINERS>
    </ECUC-CONTAINER-VALUE>
    <ECUC-CONTAINER-VALUE>
      <SHORT-NAME>XccBaseSocket</SHORT-NAME>
      <DEFINITION-REF DEST="ECUC-PARAM-CONF-CONTAINER-DEF">
          /AUTOSAR/EcucDefs/SwCluC/SwCluCBManif/
          SwCluCBManifResourceType</DEFINITION-REF>
      <PARAMETER-VALUES>
        <ECUC-NUMERICAL-PARAM-VALUE>
          <DEFINITION-REF DEST="ECUC-INTEGER-PARAM-DEF">/
              AUTOSAR/EcucDefs/SwCluC/SwCluCBManif/
              SwCluCBManifResourceType/
              SwCluCBManifResourceTypeId</DEFINITION-REF>
          <VALUE>254</VALUE>
        </ECUC-NUMERICAL-PARAM-VALUE>
      </PARAMETER-VALUES>
      <SUB-CONTAINERS>
        <ECUC-CONTAINER-VALUE>
          <SHORT-NAME>TransAction</SHORT-NAME>
          <DEFINITION-REF DEST="ECUC-PARAM-CONF-CONTAINER-
              DEF">/AUTOSAR/EcucDefs/SwCluC/SwCluCBManif/
              SwCluCBManifResourceType/
              SwCluCBManifProvideHandle</DEFINITION-REF>
          <PARAMETER-VALUES>
            <ECUC-TEXTUAL-PARAM-VALUE>
              <DEFINITION-REF DEST="ECUC-ENUMERATION-PARAM-
                  DEF">/AUTOSAR/EcucDefs/SwCluC/SwCluCBManif
                  /SwCluCBManifResourceType/
                  SwCluCBManifProvideHandle/
                  SwCluCBManifNativeHandleType</DEFINITION-
                  REF>
              <VALUE>FUNCTION_REFERENCE</VALUE>
            </ECUC-TEXTUAL-PARAM-VALUE>
          </PARAMETER-VALUES>
        </ECUC-CONTAINER-VALUE>
        <ECUC-CONTAINER-VALUE>
          <SHORT-NAME>TransActionNotifier</SHORT-NAME>
          <DEFINITION-REF DEST="ECUC-PARAM-CONF-CONTAINER-
              DEF">/AUTOSAR/EcucDefs/SwCluC/SwCluCBManif/
              SwCluCBManifResourceType/
              SwCluCBManifNotifierHandle</DEFINITION-REF>
          <PARAMETER-VALUES>
            <ECUC-TEXTUAL-PARAM-VALUE>
```

```
            <DEFINITION-REF DEST="ECUC-ENUMERATION-PARAM-
              DEF">/AUTOSAR/EcucDefs/SwCluC/SwCluCBManif
              /SwCluCBManifResourceType/
              SwCluCBManifNotifierHandle/
              SwCluCBManifNativeHandleType</DEFINITION-
              REF>
            <VALUE>FUNCTION_REFERENCE</VALUE>
          </ECUC-TEXTUAL-PARAM-VALUE>
        </PARAMETER-VALUES>
      </ECUC-CONTAINER-VALUE>
    </SUB-CONTAINERS>
  </ECUC-CONTAINER-VALUE>
  <ECUC-CONTAINER-VALUE>
    <SHORT-NAME>XccBasicSR</SHORT-NAME>
    <DEFINITION-REF DEST="ECUC-PARAM-CONF-CONTAINER-DEF">
      /AUTOSAR/EcucDefs/SwCluC/SwCluCBManif/
      SwCluCBManifResourceType</DEFINITION-REF>
    <PARAMETER-VALUES>
      <ECUC-NUMERICAL-PARAM-VALUE>
        <DEFINITION-REF DEST="ECUC-INTEGER-PARAM-DEF">/
          AUTOSAR/EcucDefs/SwCluC/SwCluCBManif/
          SwCluCBManifResourceType/
          SwCluCBManifResourceTypeId</DEFINITION-REF>
        <VALUE>1</VALUE>
      </ECUC-NUMERICAL-PARAM-VALUE>
    </PARAMETER-VALUES>
    <SUB-CONTAINERS>
      <ECUC-CONTAINER-VALUE>
        <SHORT-NAME>dataBuffer</SHORT-NAME>
        <DEFINITION-REF DEST="ECUC-PARAM-CONF-CONTAINER-
          DEF">/AUTOSAR/EcucDefs/SwCluC/SwCluCBManif/
          SwCluCBManifResourceType/
          SwCluCBManifProvideHandle</DEFINITION-REF>
        <PARAMETER-VALUES>
          <ECUC-TEXTUAL-PARAM-VALUE>
            <DEFINITION-REF DEST="ECUC-ENUMERATION-PARAM-
              DEF">/AUTOSAR/EcucDefs/SwCluC/SwCluCBManif
              /SwCluCBManifResourceType/
              SwCluCBManifProvideHandle/
              SwCluCBManifNativeHandleType</DEFINITION-
              REF>
            <VALUE>DATA_REFERENCE</VALUE>
          </ECUC-TEXTUAL-PARAM-VALUE>
        </PARAMETER-VALUES>
      </ECUC-CONTAINER-VALUE>
    </SUB-CONTAINERS>
  </ECUC-CONTAINER-VALUE>
  <ECUC-CONTAINER-VALUE>
    <SHORT-NAME>OsProxyOsTask</SHORT-NAME>
    <DEFINITION-REF DEST="ECUC-PARAM-CONF-CONTAINER-DEF">
      /AUTOSAR/EcucDefs/SwCluC/SwCluCBManif/
      SwCluCBManifResourceType</DEFINITION-REF>
    <PARAMETER-VALUES>
      <ECUC-NUMERICAL-PARAM-VALUE>
```

```
            <DEFINITION-REF DEST="ECUC-INTEGER-PARAM-DEF">/
                AUTOSAR/EcucDefs/SwCluC/SwCluCBManif/
                SwCluCBManifResourceType/
                SwCluCBManifResourceTypeId</DEFINITION-REF>
            <VALUE>243</VALUE>
          </ECUC-NUMERICAL-PARAM-VALUE>
        </PARAMETER-VALUES>
        <SUB-CONTAINERS>
          <ECUC-CONTAINER-VALUE>
            <SHORT-NAME>CallTaskBody</SHORT-NAME>
            <DEFINITION-REF DEST="ECUC-PARAM-CONF-CONTAINER-
                DEF">/AUTOSAR/EcucDefs/SwCluC/SwCluCBManif/
                SwCluCBManifResourceType/
                SwCluCBManifNotifierHandle</DEFINITION-REF>
            <PARAMETER-VALUES>
              <ECUC-TEXTUAL-PARAM-VALUE>
                <DEFINITION-REF DEST="ECUC-ENUMERATION-PARAM-
                    DEF">/AUTOSAR/EcucDefs/SwCluC/SwCluCBManif
                    /SwCluCBManifResourceType/
                    SwCluCBManifNotifierHandle/
                    SwCluCBManifNativeHandleType</DEFINITION-
                    REF>
                <VALUE>FUNCTION_REFERENCE</VALUE>
              </ECUC-TEXTUAL-PARAM-VALUE>
            </PARAMETER-VALUES>
          </ECUC-CONTAINER-VALUE>
        </SUB-CONTAINERS>
      </ECUC-CONTAINER-VALUE>
      <ECUC-CONTAINER-VALUE>
        <SHORT-NAME>OsBaseSocket</SHORT-NAME>
        <DEFINITION-REF DEST="ECUC-PARAM-CONF-CONTAINER-DEF">
            /AUTOSAR/EcucDefs/SwCluC/SwCluCBManif/
            SwCluCBManifResourceType</DEFINITION-REF>
        <PARAMETER-VALUES>
          <ECUC-NUMERICAL-PARAM-VALUE>
            <DEFINITION-REF DEST="ECUC-INTEGER-PARAM-DEF">/
                AUTOSAR/EcucDefs/SwCluC/SwCluCBManif/
                SwCluCBManifResourceType/
                SwCluCBManifResourceTypeId</DEFINITION-REF>
            <VALUE>253</VALUE>
          </ECUC-NUMERICAL-PARAM-VALUE>
        </PARAMETER-VALUES>
        <SUB-CONTAINERS>
          <ECUC-CONTAINER-VALUE>
            <SHORT-NAME>SysCall</SHORT-NAME>
            <DEFINITION-REF DEST="ECUC-PARAM-CONF-CONTAINER-
                DEF">/AUTOSAR/EcucDefs/SwCluC/SwCluCBManif/
                SwCluCBManifResourceType/
                SwCluCBManifProvideHandle</DEFINITION-REF>
            <PARAMETER-VALUES>
              <ECUC-TEXTUAL-PARAM-VALUE>
```

```
                    <DEFINITION-REF DEST="ECUC-ENUMERATION-PARAM-
                        DEF">/AUTOSAR/EcucDefs/SwCluC/SwCluCBManif
                        /SwCluCBManifResourceType/
                        SwCluCBManifProvideHandle/
                        SwCluCBManifNativeHandleType</DEFINITION-
                        REF>
                    <VALUE>FUNCTION_REFERENCE</VALUE>
                  </ECUC-TEXTUAL-PARAM-VALUE>
                </PARAMETER-VALUES>
              </ECUC-CONTAINER-VALUE>
              <ECUC-CONTAINER-VALUE>
                <SHORT-NAME>Notifier</SHORT-NAME>
                <DEFINITION-REF DEST="ECUC-PARAM-CONF-CONTAINER-
                    DEF">/AUTOSAR/EcucDefs/SwCluC/SwCluCBManif/
                    SwCluCBManifResourceType/
                    SwCluCBManifNotifierHandle</DEFINITION-REF>
                <PARAMETER-VALUES>
                  <ECUC-TEXTUAL-PARAM-VALUE>
                    <DEFINITION-REF DEST="ECUC-ENUMERATION-PARAM-
                        DEF">/AUTOSAR/EcucDefs/SwCluC/SwCluCBManif
                        /SwCluCBManifResourceType/
                        SwCluCBManifNotifierHandle/
                        SwCluCBManifNativeHandleType</DEFINITION-
                        REF>
                    <VALUE>FUNCTION_REFERENCE</VALUE>
                  </ECUC-TEXTUAL-PARAM-VALUE>
                </PARAMETER-VALUES>
              </ECUC-CONTAINER-VALUE>
            </SUB-CONTAINERS>
          </ECUC-CONTAINER-VALUE>
        </SUB-CONTAINERS>
      </ECUC-CONTAINER-VALUE>
    </CONTAINERS>
  </ECUC-MODULE-CONFIGURATION-VALUES>
 </ELEMENTS>
 </AR-PACKAGE>
 </AR-PACKAGES>
 </AR-PACKAGE>
 </AR-PACKAGES>
</AUTOSAR>
```

Listing A.22: DOC_SwCluC_Ecuc_SwCluC_AHB.arxml

A.3.5 DOC_SwCluC_Ecuc_SwCluC_Host.arxml

```
<AUTOSAR xmlns="http://autosar.org/schema/r4.0" xmlns:xsi="http://www.w3.
    org/2001/XMLSchema-instance" xsi:schemaLocation="http://autosar.org/
    schema/r4.0 AUTOSAR_00055.xsd">
  <AR-PACKAGES>
    <AR-PACKAGE>
      <SHORT-NAME>AUTOSAR_SwCluC</SHORT-NAME>
      <AR-PACKAGES>
```

```
<AR-PACKAGE>
  <SHORT-NAME>EcucModuleConfigurationValuess</SHORT-NAME>
  <ELEMENTS>
    <ECUC-MODULE-CONFIGURATION-VALUES>
      <SHORT-NAME>SwCluC</SHORT-NAME>
      <DEFINITION-REF DEST="ECUC-MODULE-DEF">/AUTOSAR/EcucDefs/
          SwCluC</DEFINITION-REF>
      <ECUC-DEF-EDITION>1.0.0</ECUC-DEF-EDITION>
      <CONTAINERS>
        <ECUC-CONTAINER-VALUE>
          <SHORT-NAME>SwCluCDefinitionSet</SHORT-NAME>
          <DEFINITION-REF DEST="ECUC-PARAM-CONF-CONTAINER-DEF">/
              AUTOSAR/EcucDefs/SwCluC/SwCluCDefinitionSet</
              DEFINITION-REF>
          <SUB-CONTAINERS>
            <ECUC-CONTAINER-VALUE>
              <SHORT-NAME>ClusterHost</SHORT-NAME>
              <DEFINITION-REF DEST="ECUC-PARAM-CONF-CONTAINER-DEF">
                  /AUTOSAR/EcucDefs/SwCluC/SwCluCDefinitionSet/
                  SwCluCDefinition</DEFINITION-REF>
              <PARAMETER-VALUES>
                <ECUC-TEXTUAL-PARAM-VALUE>
                  <DEFINITION-REF DEST="ECUC-ENUMERATION-PARAM-DEF"
                      >/AUTOSAR/EcucDefs/SwCluC/SwCluCDefinitionSet/
                      SwCluCDefinition/
                      SwCluCBManifDescriptorTreatment</DEFINITION-
                      REF>
                  <VALUE>EMBED_DESCRIPTORS</VALUE>
                </ECUC-TEXTUAL-PARAM-VALUE>
                <ECUC-TEXTUAL-PARAM-VALUE>
                  <DEFINITION-REF DEST="ECUC-ENUMERATION-PARAM-DEF"
                      >/AUTOSAR/EcucDefs/SwCluC/SwCluCDefinitionSet/
                      SwCluCDefinition/
                      SwCluCBManifOnBoardConnectorControl</
                      DEFINITION-REF>
                  <VALUE>ENABLE_ON_ECU_CONNECTOR</VALUE>
                </ECUC-TEXTUAL-PARAM-VALUE>
                <ECUC-NUMERICAL-PARAM-VALUE>
                  <DEFINITION-REF DEST="ECUC-INTEGER-PARAM-DEF">/
                      AUTOSAR/EcucDefs/SwCluC/SwCluCDefinitionSet/
                      SwCluCDefinition/SwCluCMachineId</DEFINITION-
                      REF>
                  <VALUE>0</VALUE>
                </ECUC-NUMERICAL-PARAM-VALUE>
                <ECUC-NUMERICAL-PARAM-VALUE>
                  <DEFINITION-REF DEST="ECUC-INTEGER-PARAM-DEF">/
                      AUTOSAR/EcucDefs/SwCluC/SwCluCDefinitionSet/
                      SwCluCDefinition/SwCluCSoftwareClusterId</
                      DEFINITION-REF>
                  <VALUE>0</VALUE>
                </ECUC-NUMERICAL-PARAM-VALUE>
                <ECUC-TEXTUAL-PARAM-VALUE>
                  <DEFINITION-REF DEST="ECUC-ENUMERATION-PARAM-DEF"
                      >/AUTOSAR/EcucDefs/SwCluC/SwCluCDefinitionSet/
                      SwCluCDefinition/SwCluCSoftwareClusterType</
                      DEFINITION-REF>
```

```
            <VALUE>HOST_SW_CLUSTER</VALUE>
          </ECUC-TEXTUAL-PARAM-VALUE>
        </PARAMETER-VALUES>
      </ECUC-CONTAINER-VALUE>
      <ECUC-CONTAINER-VALUE>
        <SHORT-NAME>ClusterAHB</SHORT-NAME>
        <DEFINITION-REF DEST="ECUC-PARAM-CONF-CONTAINER-DEF">
            /AUTOSAR/EcucDefs/SwCluC/SwCluCDefinitionSet/
            SwCluCDefinition</DEFINITION-REF>
        <PARAMETER-VALUES>
          <ECUC-TEXTUAL-PARAM-VALUE>
            <DEFINITION-REF DEST="ECUC-ENUMERATION-PARAM-DEF"
                >/AUTOSAR/EcucDefs/SwCluC/SwCluCDefinitionSet/
                SwCluCDefinition/
                SwCluCBManifDescriptorTreatment</DEFINITION-
                REF>
            <VALUE>EMBED_DESCRIPTORS</VALUE>
          </ECUC-TEXTUAL-PARAM-VALUE>
          <ECUC-TEXTUAL-PARAM-VALUE>
            <DEFINITION-REF DEST="ECUC-ENUMERATION-PARAM-DEF"
                >/AUTOSAR/EcucDefs/SwCluC/SwCluCDefinitionSet/
                SwCluCDefinition/
                SwCluCBManifOnBoardConnectorControl</
                DEFINITION-REF>
            <VALUE>ENABLE_ON_ECU_CONNECTOR</VALUE>
          </ECUC-TEXTUAL-PARAM-VALUE>
          <ECUC-NUMERICAL-PARAM-VALUE>
            <DEFINITION-REF DEST="ECUC-INTEGER-PARAM-DEF">/
                AUTOSAR/EcucDefs/SwCluC/SwCluCDefinitionSet/
                SwCluCDefinition/SwCluCMachineId</DEFINITION-
                REF>
            <VALUE>0</VALUE>
          </ECUC-NUMERICAL-PARAM-VALUE>
          <ECUC-NUMERICAL-PARAM-VALUE>
            <DEFINITION-REF DEST="ECUC-INTEGER-PARAM-DEF">/
                AUTOSAR/EcucDefs/SwCluC/SwCluCDefinitionSet/
                SwCluCDefinition/SwCluCSoftwareClusterId</
                DEFINITION-REF>
            <VALUE>1</VALUE>
          </ECUC-NUMERICAL-PARAM-VALUE>
          <ECUC-TEXTUAL-PARAM-VALUE>
            <DEFINITION-REF DEST="ECUC-ENUMERATION-PARAM-DEF"
                >/AUTOSAR/EcucDefs/SwCluC/SwCluCDefinitionSet/
                SwCluCDefinition/SwCluCSoftwareClusterType</
                DEFINITION-REF>
            <VALUE>APPLICATION_SW_CLUSTER</VALUE>
          </ECUC-TEXTUAL-PARAM-VALUE>
        </PARAMETER-VALUES>
      </ECUC-CONTAINER-VALUE>
    </SUB-CONTAINERS>
  </ECUC-CONTAINER-VALUE>
  <ECUC-CONTAINER-VALUE>
    <SHORT-NAME>SwCluCGeneral</SHORT-NAME>
    <DEFINITION-REF DEST="ECUC-PARAM-CONF-CONTAINER-DEF">/
        AUTOSAR/EcucDefs/SwCluC/SwCluCGeneral</DEFINITION-REF>
    <REFERENCE-VALUES>
```

```
      <ECUC-REFERENCE-VALUE>
        <DEFINITION-REF DEST="ECUC-REFERENCE-DEF">/AUTOSAR/
            EcucDefs/SwCluC/SwCluCGeneral/
            SwCluCDefinitionSelection</DEFINITION-REF>
        <VALUE-REF DEST="ECUC-CONTAINER-VALUE">/
            AUTOSAR_SwCluC/EcucModuleConfigurationValuess/
            SwCluC/SwCluCDefinitionSet/ClusterHost</VALUE-REF>
      </ECUC-REFERENCE-VALUE>
    </REFERENCE-VALUES>
  </ECUC-CONTAINER-VALUE>
  <ECUC-CONTAINER-VALUE>
    <SHORT-NAME>SwCluCBaseConfigurationCheck</SHORT-NAME>
    <DEFINITION-REF DEST="ECUC-PARAM-CONF-CONTAINER-DEF">/
       AUTOSAR/EcucDefs/SwCluC/SwCluCBaseConfigurationCheck</
       DEFINITION-REF>
    <PARAMETER-VALUES>
      <ECUC-TEXTUAL-PARAM-VALUE>
        <DEFINITION-REF DEST="ECUC-MULTILINE-STRING-PARAM-DEF
            ">/AUTOSAR/EcucDefs/SwCluC/
            SwCluCBaseConfigurationCheck/
            SwCluCAutoBaseConfigDescriptor</DEFINITION-REF>
        <VALUE>compiler flags= -O3 -w -std=c99</VALUE>
      </ECUC-TEXTUAL-PARAM-VALUE>
      <ECUC-TEXTUAL-PARAM-VALUE>
        <DEFINITION-REF DEST="ECUC-MULTILINE-STRING-PARAM-DEF
            ">/AUTOSAR/EcucDefs/SwCluC/
            SwCluCBaseConfigurationCheck/
            SwCluCUserBaseConfigDescriptor</DEFINITION-REF>
        <VALUE>Integration according to Architecture
            Specification 1.0.2</VALUE>
      </ECUC-TEXTUAL-PARAM-VALUE>
    </PARAMETER-VALUES>
    <REFERENCE-VALUES>
      <ECUC-REFERENCE-VALUE>
        <DEFINITION-REF DEST="ECUC-FOREIGN-REFERENCE-DEF">/
            AUTOSAR/EcucDefs/SwCluC/
            SwCluCBaseConfigurationCheck/SwCluCResourceRef</
            DEFINITION-REF>
        <VALUE-REF DEST="CP-SOFTWARE-CLUSTER-SERVICE-RESOURCE
            ">/AUTOSAR/CONC_670/SysResPool/
            CpSoftwareClusterResourcePools/SwClusCResourcePool
            /BaseConfigCheck_AHB</VALUE-REF>
      </ECUC-REFERENCE-VALUE>
    </REFERENCE-VALUES>
  </ECUC-CONTAINER-VALUE>
  <ECUC-CONTAINER-VALUE>
    <SHORT-NAME>SwCluCXcc</SHORT-NAME>
    <DEFINITION-REF DEST="ECUC-PARAM-CONF-CONTAINER-DEF">/
       AUTOSAR/EcucDefs/SwCluC/SwCluCXcc</DEFINITION-REF>
    <PARAMETER-VALUES>
      <ECUC-TEXTUAL-PARAM-VALUE>
        <DEFINITION-REF DEST="ECUC-ENUMERATION-PARAM-DEF">/
            AUTOSAR/EcucDefs/SwCluC/SwCluCXcc/
            SwCluCXccDefaultDataHandling</DEFINITION-REF>
        <VALUE>DEFAULTS_AS_CALPRMS</VALUE>
      </ECUC-TEXTUAL-PARAM-VALUE>
```

```
</PARAMETER-VALUES>
<SUB-CONTAINERS>
  <ECUC-CONTAINER-VALUE>
    <SHORT-NAME>Gr8Xcc</SHORT-NAME>
    <DEFINITION-REF DEST="ECUC-PARAM-CONF-CONTAINER-DEF">
        /AUTOSAR/EcucDefs/SwCluC/SwCluCXcc/
        RteRipsPluginProps</DEFINITION-REF>
    <PARAMETER-VALUES>
      <ECUC-NUMERICAL-PARAM-VALUE>
        <DEFINITION-REF DEST="ECUC-BOOLEAN-PARAM-DEF">/
            AUTOSAR/EcucDefs/SwCluC/SwCluCXcc/
            RteRipsPluginProps/
            RtePluginSupportsIReadIWrite</DEFINITION-REF>
        <VALUE>true</VALUE>
      </ECUC-NUMERICAL-PARAM-VALUE>
      <ECUC-TEXTUAL-PARAM-VALUE>
        <DEFINITION-REF DEST="ECUC-ENUMERATION-PARAM-DEF"
            >/AUTOSAR/EcucDefs/SwCluC/SwCluCXcc/
            RteRipsPluginProps/
            RteRipsGlobalCopyInstantiationPolicy</
            DEFINITION-REF>
        <VALUE>RTE_RIPS_INSTANTIATION_BY_PLUGIN</VALUE>
      </ECUC-TEXTUAL-PARAM-VALUE>
      <ECUC-TEXTUAL-PARAM-VALUE>
        <DEFINITION-REF DEST="ECUC-ENUMERATION-PARAM-DEF"
            >/AUTOSAR/EcucDefs/SwCluC/SwCluCXcc/
            RteRipsPluginProps/
            RteRipsPluginCommunicationScope</DEFINITION-
            REF>
        <VALUE>RTE_RIPS_CROSS_SW_CLUSTER_COM</VALUE>
      </ECUC-TEXTUAL-PARAM-VALUE>
    </PARAMETER-VALUES>
  </ECUC-CONTAINER-VALUE>
  <ECUC-CONTAINER-VALUE>
    <SHORT-NAME>SwCluCXccBaseSocket</SHORT-NAME>
    <DEFINITION-REF DEST="ECUC-PARAM-CONF-CONTAINER-DEF">
        /AUTOSAR/EcucDefs/SwCluC/SwCluCXcc/
        SwCluCXccBaseSocket</DEFINITION-REF>
    <REFERENCE-VALUES>
      <ECUC-REFERENCE-VALUE>
        <DEFINITION-REF DEST="ECUC-REFERENCE-DEF">/
            AUTOSAR/EcucDefs/SwCluC/SwCluCXcc/
            SwCluCXccBaseSocket/SwCluCXccEcucPartitionRef<
            /DEFINITION-REF>
        <VALUE-REF DEST="ECUC-CONTAINER-VALUE">/
            AUTOSAR_EcuC/EcucModuleConfigurationValuess/
            EcuC/EcucPartitionCollection/PartitionCore1QM<
            /VALUE-REF>
      </ECUC-REFERENCE-VALUE>
      <ECUC-REFERENCE-VALUE>
        <DEFINITION-REF DEST="ECUC-FOREIGN-REFERENCE-DEF"
            >/AUTOSAR/EcucDefs/SwCluC/SwCluCXcc/
            SwCluCXccBaseSocket/SwCluCResourceRef</
            DEFINITION-REF>
```

```
            <VALUE-REF DEST="CP-SOFTWARE-CLUSTER-SERVICE-
                RESOURCE">/AUTOSAR/CONC_670/SysResPool/
                CpSoftwareClusterResourcePools/
                SwClusCResourcePool/XccBaseSocket_AHB</VALUE-
                REF>
          </ECUC-REFERENCE-VALUE>
        </REFERENCE-VALUES>
      </ECUC-CONTAINER-VALUE>
    </SUB-CONTAINERS>
  </ECUC-CONTAINER-VALUE>
  <ECUC-CONTAINER-VALUE>
    <SHORT-NAME>SwCluCProxies</SHORT-NAME>
    <DEFINITION-REF DEST="ECUC-PARAM-CONF-CONTAINER-DEF">/
       AUTOSAR/EcucDefs/SwCluC/SwCluCProxies</DEFINITION-REF>
    <PARAMETER-VALUES>
      <ECUC-TEXTUAL-PARAM-VALUE>
        <DEFINITION-REF DEST="ECUC-ENUMERATION-PARAM-DEF">/
           AUTOSAR/EcucDefs/SwCluC/SwCluCProxies/
           SwCluCProxyGenerationNvM</DEFINITION-REF>
        <VALUE>PROXY_DISABLED</VALUE>
      </ECUC-TEXTUAL-PARAM-VALUE>
      <ECUC-TEXTUAL-PARAM-VALUE>
        <DEFINITION-REF DEST="ECUC-ENUMERATION-PARAM-DEF">/
           AUTOSAR/EcucDefs/SwCluC/SwCluCProxies/
           SwCluCProxyGenerationOs</DEFINITION-REF>
        <VALUE>LOW_PROXY</VALUE>
      </ECUC-TEXTUAL-PARAM-VALUE>
    </PARAMETER-VALUES>
    <SUB-CONTAINERS>
      <ECUC-CONTAINER-VALUE>
        <SHORT-NAME>SwCluCOsProxy</SHORT-NAME>
        <DEFINITION-REF DEST="ECUC-PARAM-CONF-CONTAINER-DEF">
           /AUTOSAR/EcucDefs/SwCluC/SwCluCProxies/
           SwCluCOsProxy</DEFINITION-REF>
        <SUB-CONTAINERS>
          <ECUC-CONTAINER-VALUE>
            <SHORT-NAME>OsBaseSocket_AHB</SHORT-NAME>
            <DEFINITION-REF DEST="ECUC-PARAM-CONF-CONTAINER-
                DEF">/AUTOSAR/EcucDefs/SwCluC/SwCluCProxies/
                SwCluCOsProxy/SwCluCOsProxyOsBaseSocket</
                DEFINITION-REF>
            <REFERENCE-VALUES>
              <ECUC-REFERENCE-VALUE>
                <DEFINITION-REF DEST="ECUC-FOREIGN-REFERENCE-
                    DEF">/AUTOSAR/EcucDefs/SwCluC/
                    SwCluCProxies/SwCluCOsProxy/
                    SwCluCOsProxyOsBaseSocket/
                    SwCluCResourceRef</DEFINITION-REF>
                <VALUE-REF DEST="CP-SOFTWARE-CLUSTER-SERVICE-
                    RESOURCE">/AUTOSAR/CONC_670/SysResPool/
                    CpSoftwareClusterResourcePools/
                    OsResourcePool/OsBaseSocket_AHB</VALUE-REF
                    >
              </ECUC-REFERENCE-VALUE>
            </REFERENCE-VALUES>
          </ECUC-CONTAINER-VALUE>
```

```
<ECUC-CONTAINER-VALUE>
  <SHORT-NAME>OsProxyOsT_10ms_Ph1</SHORT-NAME>
  <DEFINITION-REF DEST="ECUC-PARAM-CONF-CONTAINER-
      DEF">/AUTOSAR/EcucDefs/SwCluC/SwCluCProxies/
      SwCluCOsProxy/SwCluCOsProxyOsTask</DEFINITION-
      REF>
  <PARAMETER-VALUES>
    <ECUC-TEXTUAL-PARAM-VALUE>
      <DEFINITION-REF DEST="ECUC-ENUMERATION-PARAM-
          DEF">/AUTOSAR/EcucDefs/SwCluC/
          SwCluCProxies/SwCluCOsProxy/
          SwCluCOsProxyOsTask/
          SwCluCOsProxyTaskActivation</DEFINITION-
          REF>
      <VALUE>OMIT_TASK_ACTIVATION</VALUE>
    </ECUC-TEXTUAL-PARAM-VALUE>
  </PARAMETER-VALUES>
  <REFERENCE-VALUES>
    <ECUC-REFERENCE-VALUE>
      <DEFINITION-REF DEST="ECUC-REFERENCE-DEF">/
          AUTOSAR/EcucDefs/SwCluC/SwCluCProxies/
          SwCluCOsProxy/SwCluCOsProxyOsTask/
          SwCluCOsProxyOsTaskRef</DEFINITION-REF>
      <VALUE-REF DEST="ECUC-CONTAINER-VALUE">/
          AUTOSAR_Os/EcucModuleConfigurationValuess/
          Os/OsTask_10ms</VALUE-REF>
    </ECUC-REFERENCE-VALUE>
    <ECUC-REFERENCE-VALUE>
      <DEFINITION-REF DEST="ECUC-FOREIGN-REFERENCE-
          DEF">/AUTOSAR/EcucDefs/SwCluC/
          SwCluCProxies/SwCluCOsProxy/
          SwCluCOsProxyOsTask/SwCluCResourceRef</
          DEFINITION-REF>
      <VALUE-REF DEST="CP-SOFTWARE-CLUSTER-SERVICE-
          RESOURCE">/AUTOSAR/CONC_670/SysResPool/
          CpSoftwareClusterResourcePools/
          OsResourcePool/OsProxyOsT_10ms_Ph1</VALUE-
          REF>
    </ECUC-REFERENCE-VALUE>
  </REFERENCE-VALUES>
  <SUB-CONTAINERS>
    <ECUC-CONTAINER-VALUE>
      <SHORT-NAME>Disp_ClusterAHB_10ms_Ph1</SHORT-
          NAME>
      <DEFINITION-REF DEST="ECUC-PARAM-CONF-
          CONTAINER-DEF">/AUTOSAR/EcucDefs/SwCluC/
          SwCluCProxies/SwCluCOsProxy/
          SwCluCOsProxyOsTask/
          SwCluCOsProxyOsTaskDispatcher</DEFINITION-
          REF>
      <PARAMETER-VALUES>
        <ECUC-NUMERICAL-PARAM-VALUE>
```

```
                <DEFINITION-REF DEST="ECUC-INTEGER-PARAM-
                    DEF">/AUTOSAR/EcucDefs/SwCluC/
                    SwCluCProxies/SwCluCOsProxy/
                    SwCluCOsProxyOsTask/
                    SwCluCOsProxyOsTaskDispatcher/
                    SwCluCOsProxyMaxNumberOfCallee</
                    DEFINITION-REF>
                <VALUE>1</VALUE>
              </ECUC-NUMERICAL-PARAM-VALUE>
            </PARAMETER-VALUES>
            <SUB-CONTAINERS>
              <ECUC-CONTAINER-VALUE>
                <SHORT-NAME>TE_ClusterAHB_10ms_Ph1</SHORT
                    -NAME>
                <DEFINITION-REF DEST="ECUC-PARAM-CONF-
                    CONTAINER-DEF">/AUTOSAR/EcucDefs/
                    SwCluC/SwCluCProxies/SwCluCOsProxy/
                    SwCluCOsProxyOsTask/
                    SwCluCOsProxyOsTaskDispatcher/
                    SwCluCOsProxyDispatcherTimingEvent</
                    DEFINITION-REF>
                <PARAMETER-VALUES>
                  <ECUC-NUMERICAL-PARAM-VALUE>
                    <DEFINITION-REF DEST="ECUC-FLOAT-
                        PARAM-DEF">/AUTOSAR/EcucDefs/
                        SwCluC/SwCluCProxies/SwCluCOsProxy
                        /SwCluCOsProxyOsTask/
                        SwCluCOsProxyOsTaskDispatcher/
                        SwCluCOsProxyDispatcherTimingEvent
                        /SwCluCOsProxyTimingEventPeriod</
                        DEFINITION-REF>
                    <VALUE>0.01</VALUE>
                  </ECUC-NUMERICAL-PARAM-VALUE>
                </PARAMETER-VALUES>
              </ECUC-CONTAINER-VALUE>
            </SUB-CONTAINERS>
          </ECUC-CONTAINER-VALUE>
        </SUB-CONTAINERS>
      </ECUC-CONTAINER-VALUE>
      <ECUC-CONTAINER-VALUE>
        <SHORT-NAME>OsProxyOsT_10ms_Ph2</SHORT-NAME>
        <DEFINITION-REF DEST="ECUC-PARAM-CONF-CONTAINER-
            DEF">/AUTOSAR/EcucDefs/SwCluC/SwCluCProxies/
            SwCluCOsProxy/SwCluCOsProxyOsTask</DEFINITION-
            REF>
        <PARAMETER-VALUES>
          <ECUC-TEXTUAL-PARAM-VALUE>
            <DEFINITION-REF DEST="ECUC-ENUMERATION-PARAM-
                DEF">/AUTOSAR/EcucDefs/SwCluC/
                SwCluCProxies/SwCluCOsProxy/
                SwCluCOsProxyOsTask/
                SwCluCOsProxyTaskActivation</DEFINITION-
                REF>
            <VALUE>OMIT_TASK_ACTIVATION</VALUE>
          </ECUC-TEXTUAL-PARAM-VALUE>
        </PARAMETER-VALUES>
```

```
<REFERENCE-VALUES>
  <ECUC-REFERENCE-VALUE>
    <DEFINITION-REF DEST="ECUC-REFERENCE-DEF">/
        AUTOSAR/EcucDefs/SwCluC/SwCluCProxies/
        SwCluCOsProxy/SwCluCOsProxyOsTask/
        SwCluCOsProxyOsTaskRef</DEFINITION-REF>
    <VALUE-REF DEST="ECUC-CONTAINER-VALUE">/
        AUTOSAR_Os/EcucModuleConfigurationValuess/
        Os/OsTask_10ms</VALUE-REF>
  </ECUC-REFERENCE-VALUE>
  <ECUC-REFERENCE-VALUE>
    <DEFINITION-REF DEST="ECUC-FOREIGN-REFERENCE-
        DEF">/AUTOSAR/EcucDefs/SwCluC/
        SwCluCProxies/SwCluCOsProxy/
        SwCluCOsProxyOsTask/SwCluCResourceRef</
        DEFINITION-REF>
    <VALUE-REF DEST="CP-SOFTWARE-CLUSTER-SERVICE-
        RESOURCE">/AUTOSAR/CONC_670/SysResPool/
        CpSoftwareClusterResourcePools/
        OsResourcePool/OsProxyOsT_10ms_Ph2</VALUE-
        REF>
  </ECUC-REFERENCE-VALUE>
</REFERENCE-VALUES>
<SUB-CONTAINERS>
  <ECUC-CONTAINER-VALUE>
    <SHORT-NAME>Disp_ClusterAHB_10ms_Ph2</SHORT-
        NAME>
    <DEFINITION-REF DEST="ECUC-PARAM-CONF-
        CONTAINER-DEF">/AUTOSAR/EcucDefs/SwCluC/
        SwCluCProxies/SwCluCOsProxy/
        SwCluCOsProxyOsTask/
        SwCluCOsProxyOsTaskDispatcher</DEFINITION-
        REF>
    <PARAMETER-VALUES>
      <ECUC-NUMERICAL-PARAM-VALUE>
        <DEFINITION-REF DEST="ECUC-INTEGER-PARAM-
            DEF">/AUTOSAR/EcucDefs/SwCluC/
            SwCluCProxies/SwCluCOsProxy/
            SwCluCOsProxyOsTask/
            SwCluCOsProxyOsTaskDispatcher/
            SwCluCOsProxyMaxNumberOfCallee</
            DEFINITION-REF>
        <VALUE>1</VALUE>
      </ECUC-NUMERICAL-PARAM-VALUE>
    </PARAMETER-VALUES>
    <SUB-CONTAINERS>
      <ECUC-CONTAINER-VALUE>
        <SHORT-NAME>TE_ClusterAHB_10ms_Ph2</SHORT
            -NAME>
        <DEFINITION-REF DEST="ECUC-PARAM-CONF-
            CONTAINER-DEF">/AUTOSAR/EcucDefs/
            SwCluC/SwCluCProxies/SwCluCOsProxy/
            SwCluCOsProxyOsTask/
            SwCluCOsProxyOsTaskDispatcher/
            SwCluCOsProxyDispatcherTimingEvent</
            DEFINITION-REF>
```

```
                <PARAMETER-VALUES>
                  <ECUC-NUMERICAL-PARAM-VALUE>
                    <DEFINITION-REF DEST="ECUC-FLOAT-
                        PARAM-DEF">/AUTOSAR/EcucDefs/
                        SwCluC/SwCluCProxies/SwCluCOsProxy
                        /SwCluCOsProxyOsTask/
                        SwCluCOsProxyOsTaskDispatcher/
                        SwCluCOsProxyDispatcherTimingEvent
                        /SwCluCOsProxyTimingEventPeriod</
                        DEFINITION-REF>
                      <VALUE>0.01</VALUE>
                  </ECUC-NUMERICAL-PARAM-VALUE>
                </PARAMETER-VALUES>
              </ECUC-CONTAINER-VALUE>
            </SUB-CONTAINERS>
          </ECUC-CONTAINER-VALUE>
        </SUB-CONTAINERS>
      </ECUC-CONTAINER-VALUE>
      <ECUC-CONTAINER-VALUE>
        <SHORT-NAME>OsProxyOsT_50ms</SHORT-NAME>
        <DEFINITION-REF DEST="ECUC-PARAM-CONF-CONTAINER-
            DEF">/AUTOSAR/EcucDefs/SwCluC/SwCluCProxies/
            SwCluCOsProxy/SwCluCOsProxyOsTask</DEFINITION-
            REF>
        <PARAMETER-VALUES>
          <ECUC-TEXTUAL-PARAM-VALUE>
            <DEFINITION-REF DEST="ECUC-ENUMERATION-PARAM-
                DEF">/AUTOSAR/EcucDefs/SwCluC/
                SwCluCProxies/SwCluCOsProxy/
                SwCluCOsProxyOsTask/
                SwCluCOsProxyTaskActivation</DEFINITION-
                REF>
            <VALUE>OMIT_TASK_ACTIVATION</VALUE>
          </ECUC-TEXTUAL-PARAM-VALUE>
        </PARAMETER-VALUES>
        <REFERENCE-VALUES>
          <ECUC-REFERENCE-VALUE>
            <DEFINITION-REF DEST="ECUC-REFERENCE-DEF">/
                AUTOSAR/EcucDefs/SwCluC/SwCluCProxies/
                SwCluCOsProxy/SwCluCOsProxyOsTask/
                SwCluCOsProxyOsTaskRef</DEFINITION-REF>
            <VALUE-REF DEST="ECUC-CONTAINER-VALUE">/
                AUTOSAR_Os/EcucModuleConfigurationValuess/
                Os/OsTask_50ms</VALUE-REF>
          </ECUC-REFERENCE-VALUE>
          <ECUC-REFERENCE-VALUE>
            <DEFINITION-REF DEST="ECUC-FOREIGN-REFERENCE-
                DEF">/AUTOSAR/EcucDefs/SwCluC/
                SwCluCProxies/SwCluCOsProxy/
                SwCluCOsProxyOsTask/SwCluCResourceRef</
                DEFINITION-REF>
            <VALUE-REF DEST="CP-SOFTWARE-CLUSTER-SERVICE-
                RESOURCE">/AUTOSAR/CONC_670/SysResPool/
                CpSoftwareClusterResourcePools/
                OsResourcePool/OsProxyOsT_50ms</VALUE-REF>
          </ECUC-REFERENCE-VALUE>
```

```
            </REFERENCE-VALUES>
            <SUB-CONTAINERS>
              <ECUC-CONTAINER-VALUE>
                <SHORT-NAME>Disp_ClusterAHB_50ms</SHORT-NAME>
                <DEFINITION-REF DEST="ECUC-PARAM-CONF-
                    CONTAINER-DEF">/AUTOSAR/EcucDefs/SwCluC/
                    SwCluCProxies/SwCluCOsProxy/
                    SwCluCOsProxyOsTask/
                    SwCluCOsProxyOsTaskDispatcher</DEFINITION-
                    REF>
                <PARAMETER-VALUES>
                  <ECUC-NUMERICAL-PARAM-VALUE>
                    <DEFINITION-REF DEST="ECUC-INTEGER-PARAM-
                        DEF">/AUTOSAR/EcucDefs/SwCluC/
                        SwCluCProxies/SwCluCOsProxy/
                        SwCluCOsProxyOsTask/
                        SwCluCOsProxyOsTaskDispatcher/
                        SwCluCOsProxyMaxNumberOfCallee</
                        DEFINITION-REF>
                    <VALUE>1</VALUE>
                  </ECUC-NUMERICAL-PARAM-VALUE>
                </PARAMETER-VALUES>
                <SUB-CONTAINERS>
                  <ECUC-CONTAINER-VALUE>
                    <SHORT-NAME>TE_ClusterAHB_50ms</SHORT-
                        NAME>
                    <DEFINITION-REF DEST="ECUC-PARAM-CONF-
                        CONTAINER-DEF">/AUTOSAR/EcucDefs/
                        SwCluC/SwCluCProxies/SwCluCOsProxy/
                        SwCluCOsProxyOsTask/
                        SwCluCOsProxyOsTaskDispatcher/
                        SwCluCOsProxyDispatcherTimingEvent</
                        DEFINITION-REF>
                    <PARAMETER-VALUES>
                      <ECUC-NUMERICAL-PARAM-VALUE>
                        <DEFINITION-REF DEST="ECUC-FLOAT-
                            PARAM-DEF">/AUTOSAR/EcucDefs/
                            SwCluC/SwCluCProxies/SwCluCOsProxy
                            /SwCluCOsProxyOsTask/
                            SwCluCOsProxyOsTaskDispatcher/
                            SwCluCOsProxyDispatcherTimingEvent
                            /SwCluCOsProxyTimingEventPeriod</
                            DEFINITION-REF>
                        <VALUE>0.05</VALUE>
                      </ECUC-NUMERICAL-PARAM-VALUE>
                    </PARAMETER-VALUES>
                  </ECUC-CONTAINER-VALUE>
                </SUB-CONTAINERS>
              </ECUC-CONTAINER-VALUE>
            </SUB-CONTAINERS>
          </ECUC-CONTAINER-VALUE>
        </SUB-CONTAINERS>
      </ECUC-CONTAINER-VALUE>
    </SUB-CONTAINERS>
  </ECUC-CONTAINER-VALUE>
  <ECUC-CONTAINER-VALUE>
```

```
<SHORT-NAME>SwCluCBManif</SHORT-NAME>
<DEFINITION-REF DEST="ECUC-PARAM-CONF-CONTAINER-DEF">/
    AUTOSAR/EcucDefs/SwCluC/SwCluCBManif</DEFINITION-REF>
<PARAMETER-VALUES>
  <ECUC-NUMERICAL-PARAM-VALUE>
    <DEFINITION-REF DEST="ECUC-INTEGER-PARAM-DEF">/
        AUTOSAR/EcucDefs/SwCluC/SwCluCBManif/
        SwCluCBManifImmutableTablesChecksum</DEFINITION-
        REF>
    <VALUE>513327310</VALUE>
  </ECUC-NUMERICAL-PARAM-VALUE>
  <ECUC-NUMERICAL-PARAM-VALUE>
    <DEFINITION-REF DEST="ECUC-INTEGER-PARAM-DEF">/
        AUTOSAR/EcucDefs/SwCluC/SwCluCBManif/
        SwCluCBManifSubscribedInterfaceValidityMarker</
        DEFINITION-REF>
    <VALUE>4294967295</VALUE>
  </ECUC-NUMERICAL-PARAM-VALUE>
</PARAMETER-VALUES>
<SUB-CONTAINERS>
  <ECUC-CONTAINER-VALUE>
    <SHORT-NAME>pBaseConfigCheck</SHORT-NAME>
    <DEFINITION-REF DEST="ECUC-PARAM-CONF-CONTAINER-DEF">
        /AUTOSAR/EcucDefs/SwCluC/SwCluCBManif/
        SwCluCBManifProvideResourceEntryGroup</DEFINITION-
        REF>
    <REFERENCE-VALUES>
      <ECUC-REFERENCE-VALUE>
        <DEFINITION-REF DEST="ECUC-REFERENCE-DEF">/
            AUTOSAR/EcucDefs/SwCluC/SwCluCBManif/
            SwCluCBManifProvideResourceEntryGroup/
            SwCluCBManifResourceTypeRef</DEFINITION-REF>
        <VALUE-REF DEST="ECUC-CONTAINER-VALUE">/
            AUTOSAR_SwCluC/EcucModuleConfigurationValuess/
            SwCluC/SwCluCBManif/BaseConfigCheck</VALUE-REF
            >
      </ECUC-REFERENCE-VALUE>
    </REFERENCE-VALUES>
    <SUB-CONTAINERS>
      <ECUC-CONTAINER-VALUE>
        <SHORT-NAME>BaseConfigCheck_AHB</SHORT-NAME>
        <DEFINITION-REF DEST="ECUC-PARAM-CONF-CONTAINER-
            DEF">/AUTOSAR/EcucDefs/SwCluC/SwCluCBManif/
            SwCluCBManifProvideResourceEntryGroup/
            SwCluCBManifProvideResourceEntry</DEFINITION-
            REF>
        <PARAMETER-VALUES>
          <ECUC-NUMERICAL-PARAM-VALUE>
            <DEFINITION-REF DEST="ECUC-INTEGER-PARAM-DEF"
                >/AUTOSAR/EcucDefs/SwCluC/SwCluCBManif/
                SwCluCBManifProvideResourceEntryGroup/
                SwCluCBManifProvideResourceEntry/
                SwCluCBManifResourceGuardValue</DEFINITION
                -REF>
            <VALUE>98217643</VALUE>
          </ECUC-NUMERICAL-PARAM-VALUE>
```

```
        <ECUC-TEXTUAL-PARAM-VALUE>
          <DEFINITION-REF DEST="ECUC-STRING-PARAM-DEF">
              /AUTOSAR/EcucDefs/SwCluC/SwCluCBManif/
              SwCluCBManifProvideResourceEntryGroup/
              SwCluCBManifProvideResourceEntry/
              SwCluCBManifProvideSymbol</DEFINITION-REF>
          <VALUE>Checksum</VALUE>
        </ECUC-TEXTUAL-PARAM-VALUE>
      </PARAMETER-VALUES>
      <REFERENCE-VALUES>
        <ECUC-REFERENCE-VALUE>
          <DEFINITION-REF DEST="ECUC-FOREIGN-REFERENCE-
              DEF">/AUTOSAR/EcucDefs/SwCluC/SwCluCBManif
              /SwCluCBManifProvideResourceEntryGroup/
              SwCluCBManifProvideResourceEntry/
              SwCluCBManifResourceRef</DEFINITION-REF>
          <VALUE-REF DEST="CP-SOFTWARE-CLUSTER-SERVICE-
              RESOURCE">/AUTOSAR/CONC_670/SysResPool/
              CpSoftwareClusterResourcePools/
              SwClusCResourcePool/BaseConfigCheck_AHB</
              VALUE-REF>
        </ECUC-REFERENCE-VALUE>
      </REFERENCE-VALUES>
    </ECUC-CONTAINER-VALUE>
    <ECUC-CONTAINER-VALUE>
      <SHORT-NAME>OsBaseConfigCheck_AHB</SHORT-NAME>
      <DEFINITION-REF DEST="ECUC-PARAM-CONF-CONTAINER-
          DEF">/AUTOSAR/EcucDefs/SwCluC/SwCluCBManif/
          SwCluCBManifProvideResourceEntryGroup/
          SwCluCBManifProvideResourceEntry</DEFINITION-
          REF>
      <PARAMETER-VALUES>
        <ECUC-NUMERICAL-PARAM-VALUE>
          <DEFINITION-REF DEST="ECUC-INTEGER-PARAM-DEF"
              >/AUTOSAR/EcucDefs/SwCluC/SwCluCBManif/
              SwCluCBManifProvideResourceEntryGroup/
              SwCluCBManifProvideResourceEntry/
              SwCluCBManifResourceGuardValue</DEFINITION
              -REF>
          <VALUE>668665900</VALUE>
        </ECUC-NUMERICAL-PARAM-VALUE>
        <ECUC-TEXTUAL-PARAM-VALUE>
          <DEFINITION-REF DEST="ECUC-STRING-PARAM-DEF">
              /AUTOSAR/EcucDefs/SwCluC/SwCluCBManif/
              SwCluCBManifProvideResourceEntryGroup/
              SwCluCBManifProvideResourceEntry/
              SwCluCBManifProvideSymbol</DEFINITION-REF>
          <VALUE>Checksum</VALUE>
        </ECUC-TEXTUAL-PARAM-VALUE>
      </PARAMETER-VALUES>
      <REFERENCE-VALUES>
        <ECUC-REFERENCE-VALUE>
```

```
            <DEFINITION-REF DEST="ECUC-FOREIGN-REFERENCE-
                DEF">/AUTOSAR/EcucDefs/SwCluC/SwCluCBManif
                /SwCluCBManifProvideResourceEntryGroup/
                SwCluCBManifProvideResourceEntry/
                SwCluCBManifResourceRef</DEFINITION-REF>
            <VALUE-REF DEST="CP-SOFTWARE-CLUSTER-SERVICE-
                RESOURCE">/AUTOSAR/CONC_670/SysResPool/
                CpSoftwareClusterResourcePools/
                SwClusCResourcePool/OsBaseConfigCheck_AHB<
                /VALUE-REF>
          </ECUC-REFERENCE-VALUE>
        </REFERENCE-VALUES>
      </ECUC-CONTAINER-VALUE>
    </SUB-CONTAINERS>
  </ECUC-CONTAINER-VALUE>
  <ECUC-CONTAINER-VALUE>
    <SHORT-NAME>pXccBaseSocket</SHORT-NAME>
    <DEFINITION-REF DEST="ECUC-PARAM-CONF-CONTAINER-DEF">
        /AUTOSAR/EcucDefs/SwCluC/SwCluCBManif/
        SwCluCBManifProvideResourceEntryGroup</DEFINITION-
        REF>
    <REFERENCE-VALUES>
      <ECUC-REFERENCE-VALUE>
        <DEFINITION-REF DEST="ECUC-REFERENCE-DEF">/
            AUTOSAR/EcucDefs/SwCluC/SwCluCBManif/
            SwCluCBManifProvideResourceEntryGroup/
            SwCluCBManifResourceTypeRef</DEFINITION-REF>
        <VALUE-REF DEST="ECUC-CONTAINER-VALUE">/
            AUTOSAR_SwCluC/EcucModuleConfigurationValuess/
            SwCluC/SwCluCBManif/XccBaseSocket</VALUE-REF>
      </ECUC-REFERENCE-VALUE>
    </REFERENCE-VALUES>
    <SUB-CONTAINERS>
      <ECUC-CONTAINER-VALUE>
        <SHORT-NAME>XccBaseSocket_AHB</SHORT-NAME>
        <DEFINITION-REF DEST="ECUC-PARAM-CONF-CONTAINER-
            DEF">/AUTOSAR/EcucDefs/SwCluC/SwCluCBManif/
            SwCluCBManifProvideResourceEntryGroup/
            SwCluCBManifProvideResourceEntry</DEFINITION-
            REF>
        <PARAMETER-VALUES>
          <ECUC-NUMERICAL-PARAM-VALUE>
            <DEFINITION-REF DEST="ECUC-INTEGER-PARAM-DEF"
                >/AUTOSAR/EcucDefs/SwCluC/SwCluCBManif/
                SwCluCBManifProvideResourceEntryGroup/
                SwCluCBManifProvideResourceEntry/
                SwCluCBManifResourceGuardValue</DEFINITION
                -REF>
            <VALUE>12345678</VALUE>
          </ECUC-NUMERICAL-PARAM-VALUE>
          <ECUC-TEXTUAL-PARAM-VALUE>
            <DEFINITION-REF DEST="ECUC-STRING-PARAM-DEF">
                /AUTOSAR/EcucDefs/SwCluC/SwCluCBManif/
                SwCluCBManifProvideResourceEntryGroup/
                SwCluCBManifProvideResourceEntry/
                SwCluCBManifProvideSymbol</DEFINITION-REF>
```

```
            <VALUE>SwCluC_Xcc_SysCall</VALUE>
          </ECUC-TEXTUAL-PARAM-VALUE>
          <ECUC-TEXTUAL-PARAM-VALUE>
            <DEFINITION-REF DEST="ECUC-STRING-PARAM-DEF">
              /AUTOSAR/EcucDefs/SwCluC/SwCluCBManif/
              SwCluCBManifProvideResourceEntryGroup/
              SwCluCBManifProvideResourceEntry/
              SwCluCBManifDefaultNotifierSymbol</
              DEFINITION-REF>
            <VALUE>&amp;
              SwCluC_Xcc_SysCallNotifier_Default</VALUE>
          </ECUC-TEXTUAL-PARAM-VALUE>
        </PARAMETER-VALUES>
        <REFERENCE-VALUES>
          <ECUC-REFERENCE-VALUE>
            <DEFINITION-REF DEST="ECUC-FOREIGN-REFERENCE-
              DEF">/AUTOSAR/EcucDefs/SwCluC/SwCluCBManif
              /SwCluCBManifProvideResourceEntryGroup/
              SwCluCBManifProvideResourceEntry/
              SwCluCBManifResourceRef</DEFINITION-REF>
            <VALUE-REF DEST="CP-SOFTWARE-CLUSTER-SERVICE-
              RESOURCE">/AUTOSAR/CONC_670/SysResPool/
              CpSoftwareClusterResourcePools/
              SwClusCResourcePool/XccBaseSocket_AHB</
              VALUE-REF>
          </ECUC-REFERENCE-VALUE>
        </REFERENCE-VALUES>
      </ECUC-CONTAINER-VALUE>
    </SUB-CONTAINERS>
  </ECUC-CONTAINER-VALUE>
  <ECUC-CONTAINER-VALUE>
    <SHORT-NAME>rXccBasicSR</SHORT-NAME>
    <DEFINITION-REF DEST="ECUC-PARAM-CONF-CONTAINER-DEF">
      /AUTOSAR/EcucDefs/SwCluC/SwCluCBManif/
      SwCluCBManifRequireResourceEntryGroup</DEFINITION-
      REF>
    <REFERENCE-VALUES>
      <ECUC-REFERENCE-VALUE>
        <DEFINITION-REF DEST="ECUC-REFERENCE-DEF">/
          AUTOSAR/EcucDefs/SwCluC/SwCluCBManif/
          SwCluCBManifRequireResourceEntryGroup/
          SwCluCBManifResourceTypeRef</DEFINITION-REF>
        <VALUE-REF DEST="ECUC-CONTAINER-VALUE">/
          AUTOSAR_SwCluC/EcucModuleConfigurationValuess/
          SwCluC/SwCluCBManif/XccBasicSR</VALUE-REF>
      </ECUC-REFERENCE-VALUE>
    </REFERENCE-VALUES>
    <SUB-CONTAINERS>
      <ECUC-CONTAINER-VALUE>
        <SHORT-NAME>Anton</SHORT-NAME>
        <DEFINITION-REF DEST="ECUC-PARAM-CONF-CONTAINER-
          DEF">/AUTOSAR/EcucDefs/SwCluC/SwCluCBManif/
          SwCluCBManifRequireResourceEntryGroup/
          SwCluCBManifRequireResourceEntry</DEFINITION-
          REF>
        <PARAMETER-VALUES>
```

```
        <ECUC-NUMERICAL-PARAM-VALUE>
          <DEFINITION-REF DEST="ECUC-INTEGER-PARAM-DEF"
              >/AUTOSAR/EcucDefs/SwCluC/SwCluCBManif/
              SwCluCBManifRequireResourceEntryGroup/
              SwCluCBManifRequireResourceEntry/
              SwCluCBManifResourceGuardValue</DEFINITION
              -REF>
          <VALUE>122145</VALUE>
        </ECUC-NUMERICAL-PARAM-VALUE>
        <ECUC-TEXTUAL-PARAM-VALUE>
          <DEFINITION-REF DEST="ECUC-STRING-PARAM-DEF">
              /AUTOSAR/EcucDefs/SwCluC/SwCluCBManif/
              SwCluCBManifRequireResourceEntryGroup/
              SwCluCBManifRequireResourceEntry/
              SwCluCBManifDefaultProvideSymbol</
              DEFINITION-REF>
          <VALUE>SwCluC_Xcc_Buffer_Anton_Default</VALUE
              >
        </ECUC-TEXTUAL-PARAM-VALUE>
      </PARAMETER-VALUES>
      <REFERENCE-VALUES>
        <ECUC-REFERENCE-VALUE>
          <DEFINITION-REF DEST="ECUC-FOREIGN-REFERENCE-
              DEF">/AUTOSAR/EcucDefs/SwCluC/SwCluCBManif
              /SwCluCBManifRequireResourceEntryGroup/
              SwCluCBManifRequireResourceEntry/
              SwCluCBManifResourceRef</DEFINITION-REF>
          <VALUE-REF DEST="CP-SOFTWARE-CLUSTER-
              COMMUNICATION-RESOURCE">/AUTOSAR/CONC_670/
              SysResPool/CpSoftwareClusterResourcePools/
              ComResourcePool/Anton</VALUE-REF>
        </ECUC-REFERENCE-VALUE>
      </REFERENCE-VALUES>
    </ECUC-CONTAINER-VALUE>
    <ECUC-CONTAINER-VALUE>
      <SHORT-NAME>Bernd</SHORT-NAME>
      <DEFINITION-REF DEST="ECUC-PARAM-CONF-CONTAINER-
          DEF">/AUTOSAR/EcucDefs/SwCluC/SwCluCBManif/
          SwCluCBManifRequireResourceEntryGroup/
          SwCluCBManifRequireResourceEntry</DEFINITION-
          REF>
      <PARAMETER-VALUES>
        <ECUC-NUMERICAL-PARAM-VALUE>
          <DEFINITION-REF DEST="ECUC-INTEGER-PARAM-DEF"
              >/AUTOSAR/EcucDefs/SwCluC/SwCluCBManif/
              SwCluCBManifRequireResourceEntryGroup/
              SwCluCBManifRequireResourceEntry/
              SwCluCBManifResourceGuardValue</DEFINITION
              -REF>
          <VALUE>123645</VALUE>
        </ECUC-NUMERICAL-PARAM-VALUE>
        <ECUC-TEXTUAL-PARAM-VALUE>
```

```
                <DEFINITION-REF DEST="ECUC-STRING-PARAM-DEF">
                    /AUTOSAR/EcucDefs/SwCluC/SwCluCBManif/
                    SwCluCBManifRequireResourceEntryGroup/
                    SwCluCBManifRequireResourceEntry/
                    SwCluCBManifDefaultProvideSymbol</
                    DEFINITION-REF>
                <VALUE>SwCluC_Xcc_Buffer_Bernd_Default</VALUE
                    >
              </ECUC-TEXTUAL-PARAM-VALUE>
            </PARAMETER-VALUES>
            <REFERENCE-VALUES>
              <ECUC-REFERENCE-VALUE>
                <DEFINITION-REF DEST="ECUC-FOREIGN-REFERENCE-
                    DEF">/AUTOSAR/EcucDefs/SwCluC/SwCluCBManif
                    /SwCluCBManifRequireResourceEntryGroup/
                    SwCluCBManifRequireResourceEntry/
                    SwCluCBManifResourceRef</DEFINITION-REF>
                <VALUE-REF DEST="CP-SOFTWARE-CLUSTER-
                    COMMUNICATION-RESOURCE">/AUTOSAR/CONC_670/
                    SysResPool/CpSoftwareClusterResourcePools/
                    ComResourcePool/Bernd</VALUE-REF>
              </ECUC-REFERENCE-VALUE>
            </REFERENCE-VALUES>
          </ECUC-CONTAINER-VALUE>
        </SUB-CONTAINERS>
      </ECUC-CONTAINER-VALUE>
      <ECUC-CONTAINER-VALUE>
        <SHORT-NAME>pXccBasicSR</SHORT-NAME>
        <DEFINITION-REF DEST="ECUC-PARAM-CONF-CONTAINER-DEF">
            /AUTOSAR/EcucDefs/SwCluC/SwCluCBManif/
            SwCluCBManifProvideResourceEntryGroup</DEFINITION-
            REF>
        <REFERENCE-VALUES>
          <ECUC-REFERENCE-VALUE>
            <DEFINITION-REF DEST="ECUC-REFERENCE-DEF">/
                AUTOSAR/EcucDefs/SwCluC/SwCluCBManif/
                SwCluCBManifProvideResourceEntryGroup/
                SwCluCBManifResourceTypeRef</DEFINITION-REF>
            <VALUE-REF DEST="ECUC-CONTAINER-VALUE">/
                AUTOSAR_SwCluC/EcucModuleConfigurationValuess/
                SwCluC/SwCluCBManif/XccBasicSR</VALUE-REF>
          </ECUC-REFERENCE-VALUE>
        </REFERENCE-VALUES>
        <SUB-CONTAINERS>
          <ECUC-CONTAINER-VALUE>
            <SHORT-NAME>Celine</SHORT-NAME>
            <DEFINITION-REF DEST="ECUC-PARAM-CONF-CONTAINER-
                DEF">/AUTOSAR/EcucDefs/SwCluC/SwCluCBManif/
                SwCluCBManifProvideResourceEntryGroup/
                SwCluCBManifProvideResourceEntry</DEFINITION-
                REF>
            <PARAMETER-VALUES>
              <ECUC-NUMERICAL-PARAM-VALUE>
```

```
            <DEFINITION-REF DEST="ECUC-INTEGER-PARAM-DEF"
               >/AUTOSAR/EcucDefs/SwCluC/SwCluCBManif/
               SwCluCBManifProvideResourceEntryGroup/
               SwCluCBManifProvideResourceEntry/
               SwCluCBManifResourceGuardValue</DEFINITION
               -REF>
            <VALUE>433177199</VALUE>
          </ECUC-NUMERICAL-PARAM-VALUE>
          <ECUC-TEXTUAL-PARAM-VALUE>
            <DEFINITION-REF DEST="ECUC-STRING-PARAM-DEF">
               /AUTOSAR/EcucDefs/SwCluC/SwCluCBManif/
               SwCluCBManifProvideResourceEntryGroup/
               SwCluCBManifProvideResourceEntry/
               SwCluCBManifProvideSymbol</DEFINITION-REF>
            <VALUE>SwCluC_Xcc_Celine</VALUE>
          </ECUC-TEXTUAL-PARAM-VALUE>
        </PARAMETER-VALUES>
        <REFERENCE-VALUES>
          <ECUC-REFERENCE-VALUE>
            <DEFINITION-REF DEST="ECUC-FOREIGN-REFERENCE-
               DEF">/AUTOSAR/EcucDefs/SwCluC/SwCluCBManif
               /SwCluCBManifProvideResourceEntryGroup/
               SwCluCBManifProvideResourceEntry/
               SwCluCBManifResourceRef</DEFINITION-REF>
            <VALUE-REF DEST="CP-SOFTWARE-CLUSTER-
               COMMUNICATION-RESOURCE">/AUTOSAR/CONC_670/
               SysResPool/CpSoftwareClusterResourcePools/
               ComResourcePool/Celine</VALUE-REF>
          </ECUC-REFERENCE-VALUE>
        </REFERENCE-VALUES>
      </ECUC-CONTAINER-VALUE>
    </SUB-CONTAINERS>
  </ECUC-CONTAINER-VALUE>
  <ECUC-CONTAINER-VALUE>
    <SHORT-NAME>pOsBaseSocket</SHORT-NAME>
    <DEFINITION-REF DEST="ECUC-PARAM-CONF-CONTAINER-DEF">
       /AUTOSAR/EcucDefs/SwCluC/SwCluCBManif/
       SwCluCBManifProvideResourceEntryGroup</DEFINITION-
       REF>
    <REFERENCE-VALUES>
      <ECUC-REFERENCE-VALUE>
        <DEFINITION-REF DEST="ECUC-REFERENCE-DEF">/
           AUTOSAR/EcucDefs/SwCluC/SwCluCBManif/
           SwCluCBManifProvideResourceEntryGroup/
           SwCluCBManifResourceTypeRef</DEFINITION-REF>
        <VALUE-REF DEST="ECUC-CONTAINER-VALUE">/
           AUTOSAR_SwCluC/EcucModuleConfigurationValuess/
           SwCluC/SwCluCBManif/OsBaseSocket</VALUE-REF>
      </ECUC-REFERENCE-VALUE>
    </REFERENCE-VALUES>
    <SUB-CONTAINERS>
      <ECUC-CONTAINER-VALUE>
        <SHORT-NAME>OsBaseSocket_AHB</SHORT-NAME>
```

```
<DEFINITION-REF DEST="ECUC-PARAM-CONF-CONTAINER-
    DEF">/AUTOSAR/EcucDefs/SwCluC/SwCluCBManif/
    SwCluCBManifProvideResourceEntryGroup/
    SwCluCBManifProvideResourceEntry</DEFINITION-
    REF>
<PARAMETER-VALUES>
  <ECUC-NUMERICAL-PARAM-VALUE>
    <DEFINITION-REF DEST="ECUC-INTEGER-PARAM-DEF"
        >/AUTOSAR/EcucDefs/SwCluC/SwCluCBManif/
        SwCluCBManifProvideResourceEntryGroup/
        SwCluCBManifProvideResourceEntry/
        SwCluCBManifResourceGuardValue</DEFINITION
        -REF>
    <VALUE>89127834</VALUE>
  </ECUC-NUMERICAL-PARAM-VALUE>
  <ECUC-TEXTUAL-PARAM-VALUE>
    <DEFINITION-REF DEST="ECUC-STRING-PARAM-DEF">
        /AUTOSAR/EcucDefs/SwCluC/SwCluCBManif/
        SwCluCBManifProvideResourceEntryGroup/
        SwCluCBManifProvideResourceEntry/
        SwCluCBManifProvideSymbol</DEFINITION-REF>
    <VALUE>&amp;activateTask</VALUE>
  </ECUC-TEXTUAL-PARAM-VALUE>
  <ECUC-TEXTUAL-PARAM-VALUE>
    <DEFINITION-REF DEST="ECUC-STRING-PARAM-DEF">
        /AUTOSAR/EcucDefs/SwCluC/SwCluCBManif/
        SwCluCBManifProvideResourceEntryGroup/
        SwCluCBManifProvideResourceEntry/
        SwCluCBManifDefaultNotifierSymbol</
        DEFINITION-REF>
    <VALUE>&amp;
        SwCluC_OsProxy_SysCallNotifier_Default</
        VALUE>
  </ECUC-TEXTUAL-PARAM-VALUE>
</PARAMETER-VALUES>
<REFERENCE-VALUES>
  <ECUC-REFERENCE-VALUE>
    <DEFINITION-REF DEST="ECUC-FOREIGN-REFERENCE-
        DEF">/AUTOSAR/EcucDefs/SwCluC/SwCluCBManif
        /SwCluCBManifProvideResourceEntryGroup/
        SwCluCBManifProvideResourceEntry/
        SwCluCBManifResourceRef</DEFINITION-REF>
    <VALUE-REF DEST="CP-SOFTWARE-CLUSTER-SERVICE-
        RESOURCE">/AUTOSAR/CONC_670/SysResPool/
        CpSoftwareClusterResourcePools/
        OsResourcePool/OsBaseSocket_AHB</VALUE-REF
        >
  </ECUC-REFERENCE-VALUE>
</REFERENCE-VALUES>
</ECUC-CONTAINER-VALUE>
</SUB-CONTAINERS>
</ECUC-CONTAINER-VALUE>
<ECUC-CONTAINER-VALUE>
  <SHORT-NAME>pOsProxyOsTask</SHORT-NAME>
```

```
<DEFINITION-REF DEST="ECUC-PARAM-CONF-CONTAINER-DEF">
    /AUTOSAR/EcucDefs/SwCluC/SwCluCBManif/
    SwCluCBManifProvideResourceEntryGroup</DEFINITION-
    REF>
<REFERENCE-VALUES>
  <ECUC-REFERENCE-VALUE>
    <DEFINITION-REF DEST="ECUC-REFERENCE-DEF">/
        AUTOSAR/EcucDefs/SwCluC/SwCluCBManif/
        SwCluCBManifProvideResourceEntryGroup/
        SwCluCBManifResourceTypeRef</DEFINITION-REF>
    <VALUE-REF DEST="ECUC-CONTAINER-VALUE">/
        AUTOSAR_SwCluC/EcucModuleConfigurationValuess/
        SwCluC/SwCluCBManif/OsProxyOsTask</VALUE-REF>
  </ECUC-REFERENCE-VALUE>
</REFERENCE-VALUES>
<SUB-CONTAINERS>
  <ECUC-CONTAINER-VALUE>
    <SHORT-NAME>OsProxyOsT_10ms_Ph1</SHORT-NAME>
    <DEFINITION-REF DEST="ECUC-PARAM-CONF-CONTAINER-
        DEF">/AUTOSAR/EcucDefs/SwCluC/SwCluCBManif/
        SwCluCBManifProvideResourceEntryGroup/
        SwCluCBManifProvideResourceEntry</DEFINITION-
        REF>
    <PARAMETER-VALUES>
      <ECUC-NUMERICAL-PARAM-VALUE>
        <DEFINITION-REF DEST="ECUC-INTEGER-PARAM-DEF"
            >/AUTOSAR/EcucDefs/SwCluC/SwCluCBManif/
            SwCluCBManifProvideResourceEntryGroup/
            SwCluCBManifProvideResourceEntry/
            SwCluCBManifResourceGuardValue</DEFINITION
            -REF>
        <VALUE>456767</VALUE>
      </ECUC-NUMERICAL-PARAM-VALUE>
      <ECUC-TEXTUAL-PARAM-VALUE>
        <DEFINITION-REF DEST="ECUC-STRING-PARAM-DEF">
            /AUTOSAR/EcucDefs/SwCluC/SwCluCBManif/
            SwCluCBManifProvideResourceEntryGroup/
            SwCluCBManifProvideResourceEntry/
            SwCluCBManifDefaultNotifierSymbol</
            DEFINITION-REF>
        <VALUE>&amp;SwCluC_OsProxy_defaultProxyTask</
            VALUE>
      </ECUC-TEXTUAL-PARAM-VALUE>
    </PARAMETER-VALUES>
    <REFERENCE-VALUES>
      <ECUC-REFERENCE-VALUE>
        <DEFINITION-REF DEST="ECUC-FOREIGN-REFERENCE-
            DEF">/AUTOSAR/EcucDefs/SwCluC/SwCluCBManif
            /SwCluCBManifProvideResourceEntryGroup/
            SwCluCBManifProvideResourceEntry/
            SwCluCBManifResourceRef</DEFINITION-REF>
        <VALUE-REF DEST="CP-SOFTWARE-CLUSTER-SERVICE-
            RESOURCE">/AUTOSAR/CONC_670/SysResPool/
            CpSoftwareClusterResourcePools/
            OsResourcePool/OsProxyOsT_10ms_Ph1</VALUE-
            REF>
```

```
        </ECUC-REFERENCE-VALUE>
      </REFERENCE-VALUES>
    </ECUC-CONTAINER-VALUE>
    <ECUC-CONTAINER-VALUE>
      <SHORT-NAME>OsProxyOsT_10ms_Ph2</SHORT-NAME>
      <DEFINITION-REF DEST="ECUC-PARAM-CONF-CONTAINER-
          DEF">/AUTOSAR/EcucDefs/SwCluC/SwCluCBManif/
          SwCluCBManifProvideResourceEntryGroup/
          SwCluCBManifProvideResourceEntry</DEFINITION-
          REF>
      <PARAMETER-VALUES>
        <ECUC-TEXTUAL-PARAM-VALUE>
          <DEFINITION-REF DEST="ECUC-STRING-PARAM-DEF">
              /AUTOSAR/EcucDefs/SwCluC/SwCluCBManif/
              SwCluCBManifProvideResourceEntryGroup/
              SwCluCBManifProvideResourceEntry/
              SwCluCBManifDefaultNotifierSymbol</
              DEFINITION-REF>
          <VALUE>&amp;amp;SwCluC_OsProxy_defaultProxyTask</
              VALUE>
        </ECUC-TEXTUAL-PARAM-VALUE>
        <ECUC-NUMERICAL-PARAM-VALUE>
          <DEFINITION-REF DEST="ECUC-INTEGER-PARAM-DEF"
              >/AUTOSAR/EcucDefs/SwCluC/SwCluCBManif/
              SwCluCBManifProvideResourceEntryGroup/
              SwCluCBManifProvideResourceEntry/
              SwCluCBManifResourceGuardValue</DEFINITION
              -REF>
          <VALUE>456767</VALUE>
        </ECUC-NUMERICAL-PARAM-VALUE>
      </PARAMETER-VALUES>
      <REFERENCE-VALUES>
        <ECUC-REFERENCE-VALUE>
          <DEFINITION-REF DEST="ECUC-FOREIGN-REFERENCE-
              DEF">/AUTOSAR/EcucDefs/SwCluC/SwCluCBManif
              /SwCluCBManifProvideResourceEntryGroup/
              SwCluCBManifProvideResourceEntry/
              SwCluCBManifResourceRef</DEFINITION-REF>
          <VALUE-REF DEST="CP-SOFTWARE-CLUSTER-SERVICE-
              RESOURCE">/AUTOSAR/CONC_670/SysResPool/
              CpSoftwareClusterResourcePools/
              OsResourcePool/OsProxyOsT_10ms_Ph2</VALUE-
              REF>
        </ECUC-REFERENCE-VALUE>
      </REFERENCE-VALUES>
    </ECUC-CONTAINER-VALUE>
    <ECUC-CONTAINER-VALUE>
      <SHORT-NAME>OsProxyOsT_50ms</SHORT-NAME>
      <DEFINITION-REF DEST="ECUC-PARAM-CONF-CONTAINER-
          DEF">/AUTOSAR/EcucDefs/SwCluC/SwCluCBManif/
          SwCluCBManifProvideResourceEntryGroup/
          SwCluCBManifProvideResourceEntry</DEFINITION-
          REF>
      <PARAMETER-VALUES>
        <ECUC-NUMERICAL-PARAM-VALUE>
```

```
            <DEFINITION-REF DEST="ECUC-INTEGER-PARAM-DEF"
               >/AUTOSAR/EcucDefs/SwCluC/SwCluCBManif/
               SwCluCBManifProvideResourceEntryGroup/
               SwCluCBManifProvideResourceEntry/
               SwCluCBManifResourceGuardValue</DEFINITION
               -REF>
            <VALUE>456789</VALUE>
          </ECUC-NUMERICAL-PARAM-VALUE>
          <ECUC-TEXTUAL-PARAM-VALUE>
            <DEFINITION-REF DEST="ECUC-STRING-PARAM-DEF">
               /AUTOSAR/EcucDefs/SwCluC/SwCluCBManif/
               SwCluCBManifProvideResourceEntryGroup/
               SwCluCBManifProvideResourceEntry/
               SwCluCBManifDefaultNotifierSymbol</
               DEFINITION-REF>
            <VALUE>&amp;SwCluC_OsProxy_defaultProxyTask</
               VALUE>
          </ECUC-TEXTUAL-PARAM-VALUE>
        </PARAMETER-VALUES>
        <REFERENCE-VALUES>
          <ECUC-REFERENCE-VALUE>
            <DEFINITION-REF DEST="ECUC-FOREIGN-REFERENCE-
               DEF">/AUTOSAR/EcucDefs/SwCluC/SwCluCBManif
               /SwCluCBManifProvideResourceEntryGroup/
               SwCluCBManifProvideResourceEntry/
               SwCluCBManifResourceRef</DEFINITION-REF>
            <VALUE-REF DEST="CP-SOFTWARE-CLUSTER-SERVICE-
               RESOURCE">/AUTOSAR/CONC_670/SysResPool/
               CpSoftwareClusterResourcePools/
               OsResourcePool/OsProxyOsT_50ms</VALUE-REF>
          </ECUC-REFERENCE-VALUE>
        </REFERENCE-VALUES>
      </ECUC-CONTAINER-VALUE>
    </SUB-CONTAINERS>
  </ECUC-CONTAINER-VALUE>
  <ECUC-CONTAINER-VALUE>
    <SHORT-NAME>BaseConfigCheck</SHORT-NAME>
    <DEFINITION-REF DEST="ECUC-PARAM-CONF-CONTAINER-DEF">
       /AUTOSAR/EcucDefs/SwCluC/SwCluCBManif/
       SwCluCBManifResourceType</DEFINITION-REF>
    <PARAMETER-VALUES>
      <ECUC-NUMERICAL-PARAM-VALUE>
        <DEFINITION-REF DEST="ECUC-INTEGER-PARAM-DEF">/
           AUTOSAR/EcucDefs/SwCluC/SwCluCBManif/
           SwCluCBManifResourceType/
           SwCluCBManifResourceTypeId</DEFINITION-REF>
        <VALUE>255</VALUE>
      </ECUC-NUMERICAL-PARAM-VALUE>
    </PARAMETER-VALUES>
    <SUB-CONTAINERS>
      <ECUC-CONTAINER-VALUE>
        <SHORT-NAME>dummy</SHORT-NAME>
        <DEFINITION-REF DEST="ECUC-PARAM-CONF-CONTAINER-
           DEF">/AUTOSAR/EcucDefs/SwCluC/SwCluCBManif/
           SwCluCBManifResourceType/
           SwCluCBManifProvideHandle</DEFINITION-REF>
```

```
            <PARAMETER-VALUES>
              <ECUC-TEXTUAL-PARAM-VALUE>
                <DEFINITION-REF DEST="ECUC-ENUMERATION-PARAM-
                    DEF">/AUTOSAR/EcucDefs/SwCluC/SwCluCBManif
                    /SwCluCBManifResourceType/
                    SwCluCBManifProvideHandle/
                    SwCluCBManifNativeHandleType</DEFINITION-
                    REF>
                <VALUE>VALUE</VALUE>
              </ECUC-TEXTUAL-PARAM-VALUE>
            </PARAMETER-VALUES>
          </ECUC-CONTAINER-VALUE>
        </SUB-CONTAINERS>
      </ECUC-CONTAINER-VALUE>
      <ECUC-CONTAINER-VALUE>
        <SHORT-NAME>XccBaseSocket</SHORT-NAME>
        <DEFINITION-REF DEST="ECUC-PARAM-CONF-CONTAINER-DEF">
            /AUTOSAR/EcucDefs/SwCluC/SwCluCBManif/
            SwCluCBManifResourceType</DEFINITION-REF>
        <PARAMETER-VALUES>
          <ECUC-NUMERICAL-PARAM-VALUE>
            <DEFINITION-REF DEST="ECUC-INTEGER-PARAM-DEF">/
                AUTOSAR/EcucDefs/SwCluC/SwCluCBManif/
                SwCluCBManifResourceType/
                SwCluCBManifResourceTypeId</DEFINITION-REF>
            <VALUE>254</VALUE>
          </ECUC-NUMERICAL-PARAM-VALUE>
        </PARAMETER-VALUES>
        <SUB-CONTAINERS>
          <ECUC-CONTAINER-VALUE>
            <SHORT-NAME>TransAction</SHORT-NAME>
            <DEFINITION-REF DEST="ECUC-PARAM-CONF-CONTAINER-
                DEF">/AUTOSAR/EcucDefs/SwCluC/SwCluCBManif/
                SwCluCBManifResourceType/
                SwCluCBManifProvideHandle</DEFINITION-REF>
            <PARAMETER-VALUES>
              <ECUC-TEXTUAL-PARAM-VALUE>
                <DEFINITION-REF DEST="ECUC-ENUMERATION-PARAM-
                    DEF">/AUTOSAR/EcucDefs/SwCluC/SwCluCBManif
                    /SwCluCBManifResourceType/
                    SwCluCBManifProvideHandle/
                    SwCluCBManifNativeHandleType</DEFINITION-
                    REF>
                <VALUE>FUNCTION_REFERENCE</VALUE>
              </ECUC-TEXTUAL-PARAM-VALUE>
            </PARAMETER-VALUES>
          </ECUC-CONTAINER-VALUE>
          <ECUC-CONTAINER-VALUE>
            <SHORT-NAME>TransActionNotifier</SHORT-NAME>
            <DEFINITION-REF DEST="ECUC-PARAM-CONF-CONTAINER-
                DEF">/AUTOSAR/EcucDefs/SwCluC/SwCluCBManif/
                SwCluCBManifResourceType/
                SwCluCBManifNotifierHandle</DEFINITION-REF>
            <PARAMETER-VALUES>
              <ECUC-TEXTUAL-PARAM-VALUE>
```

```
            <DEFINITION-REF DEST="ECUC-ENUMERATION-PARAM-
              DEF">/AUTOSAR/EcucDefs/SwCluC/SwCluCBManif
              /SwCluCBManifResourceType/
              SwCluCBManifNotifierHandle/
              SwCluCBManifNativeHandleType</DEFINITION-
              REF>
            <VALUE>FUNCTION_REFERENCE</VALUE>
          </ECUC-TEXTUAL-PARAM-VALUE>
        </PARAMETER-VALUES>
      </ECUC-CONTAINER-VALUE>
    </SUB-CONTAINERS>
  </ECUC-CONTAINER-VALUE>
  <ECUC-CONTAINER-VALUE>
    <SHORT-NAME>XccBasicSR</SHORT-NAME>
    <DEFINITION-REF DEST="ECUC-PARAM-CONF-CONTAINER-DEF">
      /AUTOSAR/EcucDefs/SwCluC/SwCluCBManif/
      SwCluCBManifResourceType</DEFINITION-REF>
    <PARAMETER-VALUES>
      <ECUC-NUMERICAL-PARAM-VALUE>
        <DEFINITION-REF DEST="ECUC-INTEGER-PARAM-DEF">/
          AUTOSAR/EcucDefs/SwCluC/SwCluCBManif/
          SwCluCBManifResourceType/
          SwCluCBManifResourceTypeId</DEFINITION-REF>
        <VALUE>1</VALUE>
      </ECUC-NUMERICAL-PARAM-VALUE>
    </PARAMETER-VALUES>
    <SUB-CONTAINERS>
      <ECUC-CONTAINER-VALUE>
        <SHORT-NAME>dataBuffer</SHORT-NAME>
        <DEFINITION-REF DEST="ECUC-PARAM-CONF-CONTAINER-
          DEF">/AUTOSAR/EcucDefs/SwCluC/SwCluCBManif/
          SwCluCBManifResourceType/
          SwCluCBManifProvideHandle</DEFINITION-REF>
        <PARAMETER-VALUES>
          <ECUC-TEXTUAL-PARAM-VALUE>
            <DEFINITION-REF DEST="ECUC-ENUMERATION-PARAM-
              DEF">/AUTOSAR/EcucDefs/SwCluC/SwCluCBManif
              /SwCluCBManifResourceType/
              SwCluCBManifProvideHandle/
              SwCluCBManifNativeHandleType</DEFINITION-
              REF>
            <VALUE>DATA_REFERENCE</VALUE>
          </ECUC-TEXTUAL-PARAM-VALUE>
        </PARAMETER-VALUES>
      </ECUC-CONTAINER-VALUE>
    </SUB-CONTAINERS>
  </ECUC-CONTAINER-VALUE>
  <ECUC-CONTAINER-VALUE>
    <SHORT-NAME>OsProxyOsTask</SHORT-NAME>
    <DEFINITION-REF DEST="ECUC-PARAM-CONF-CONTAINER-DEF">
      /AUTOSAR/EcucDefs/SwCluC/SwCluCBManif/
      SwCluCBManifResourceType</DEFINITION-REF>
    <PARAMETER-VALUES>
      <ECUC-NUMERICAL-PARAM-VALUE>
```

```
            <DEFINITION-REF DEST="ECUC-INTEGER-PARAM-DEF">/
                AUTOSAR/EcucDefs/SwCluC/SwCluCBManif/
                SwCluCBManifResourceType/
                SwCluCBManifResourceTypeId</DEFINITION-REF>
            <VALUE>243</VALUE>
          </ECUC-NUMERICAL-PARAM-VALUE>
        </PARAMETER-VALUES>
        <SUB-CONTAINERS>
          <ECUC-CONTAINER-VALUE>
            <SHORT-NAME>CallTaskBody</SHORT-NAME>
            <DEFINITION-REF DEST="ECUC-PARAM-CONF-CONTAINER-
                DEF">/AUTOSAR/EcucDefs/SwCluC/SwCluCBManif/
                SwCluCBManifResourceType/
                SwCluCBManifNotifierHandle</DEFINITION-REF>
            <PARAMETER-VALUES>
              <ECUC-TEXTUAL-PARAM-VALUE>
                <DEFINITION-REF DEST="ECUC-ENUMERATION-PARAM-
                    DEF">/AUTOSAR/EcucDefs/SwCluC/SwCluCBManif
                    /SwCluCBManifResourceType/
                    SwCluCBManifNotifierHandle/
                    SwCluCBManifNativeHandleType</DEFINITION-
                    REF>
                <VALUE>FUNCTION_REFERENCE</VALUE>
              </ECUC-TEXTUAL-PARAM-VALUE>
            </PARAMETER-VALUES>
          </ECUC-CONTAINER-VALUE>
        </SUB-CONTAINERS>
      </ECUC-CONTAINER-VALUE>
      <ECUC-CONTAINER-VALUE>
        <SHORT-NAME>OsBaseSocket</SHORT-NAME>
        <DEFINITION-REF DEST="ECUC-PARAM-CONF-CONTAINER-DEF">
            /AUTOSAR/EcucDefs/SwCluC/SwCluCBManif/
            SwCluCBManifResourceType</DEFINITION-REF>
        <PARAMETER-VALUES>
          <ECUC-NUMERICAL-PARAM-VALUE>
            <DEFINITION-REF DEST="ECUC-INTEGER-PARAM-DEF">/
                AUTOSAR/EcucDefs/SwCluC/SwCluCBManif/
                SwCluCBManifResourceType/
                SwCluCBManifResourceTypeId</DEFINITION-REF>
            <VALUE>253</VALUE>
          </ECUC-NUMERICAL-PARAM-VALUE>
        </PARAMETER-VALUES>
        <SUB-CONTAINERS>
          <ECUC-CONTAINER-VALUE>
            <SHORT-NAME>SysCall</SHORT-NAME>
            <DEFINITION-REF DEST="ECUC-PARAM-CONF-CONTAINER-
                DEF">/AUTOSAR/EcucDefs/SwCluC/SwCluCBManif/
                SwCluCBManifResourceType/
                SwCluCBManifProvideHandle</DEFINITION-REF>
            <PARAMETER-VALUES>
              <ECUC-TEXTUAL-PARAM-VALUE>
```

```
                        <DEFINITION-REF DEST="ECUC-ENUMERATION-PARAM-
                            DEF">/AUTOSAR/EcucDefs/SwCluC/SwCluCBManif
                            /SwCluCBManifResourceType/
                            SwCluCBManifProvideHandle/
                            SwCluCBManifNativeHandleType</DEFINITION-
                            REF>
                        <VALUE>FUNCTION_REFERENCE</VALUE>
                      </ECUC-TEXTUAL-PARAM-VALUE>
                    </PARAMETER-VALUES>
                  </ECUC-CONTAINER-VALUE>
                  <ECUC-CONTAINER-VALUE>
                    <SHORT-NAME>Notifier</SHORT-NAME>
                    <DEFINITION-REF DEST="ECUC-PARAM-CONF-CONTAINER-
                        DEF">/AUTOSAR/EcucDefs/SwCluC/SwCluCBManif/
                        SwCluCBManifResourceType/
                        SwCluCBManifNotifierHandle</DEFINITION-REF>
                    <PARAMETER-VALUES>
                      <ECUC-TEXTUAL-PARAM-VALUE>
                        <DEFINITION-REF DEST="ECUC-ENUMERATION-PARAM-
                            DEF">/AUTOSAR/EcucDefs/SwCluC/SwCluCBManif
                            /SwCluCBManifResourceType/
                            SwCluCBManifNotifierHandle/
                            SwCluCBManifNativeHandleType</DEFINITION-
                            REF>
                        <VALUE>FUNCTION_REFERENCE</VALUE>
                      </ECUC-TEXTUAL-PARAM-VALUE>
                    </PARAMETER-VALUES>
                  </ECUC-CONTAINER-VALUE>
                </SUB-CONTAINERS>
              </ECUC-CONTAINER-VALUE>
            </SUB-CONTAINERS>
          </ECUC-CONTAINER-VALUE>
        </CONTAINERS>
      </ECUC-MODULE-CONFIGURATION-VALUES>
    </ELEMENTS>
  </AR-PACKAGE>
 </AR-PACKAGES>
</AR-PACKAGE>
</AR-PACKAGES>
</AUTOSAR>
```

Listing A.23: DOC_SwCluC_Ecuc_SwCluC_Host.arxml

B Referenced Meta Classes

Class	***AbstractAccessPoint*** (abstract)			
Note	Abstract class indicating an access point from an `ExecutableEntity`.			
Base	*ARObject*, *AtpClassifier*, *AtpFeature*, *AtpStructureElement*, *Identifiable*, *MultilanguageReferrable*, *Referrable*			
Subclasses	AsynchronousServerCallResultPoint, ExternalTriggeringPointIdent, InternalTriggeringPoint, ModeAccessPointIdent, ModeSwitchPoint, ParameterAccess, *ServerCallPoint*, VariableAccess			
Aggregated by	*AtpClassifier*.atpFeature			
Attribute	***Type***	***Mult.***	***Kind***	***Note***
returnValue Provision	RteApiReturnValue ProvisionEnum	0..1	attr	This attribute controls the provision of return values for RTE APIs that correspond to the enclosing access point. This Attribute is only used by the AUTOSAR Classic Platform.

Table B.1: AbstractAccessPoint

Class	**BswExternalTriggerOccurredEvent**			
Note	A BswEvent resulting from a trigger released by another module or cluster.			
Base	*ARObject*, *AbstractEvent*, *BswEvent*, *BswScheduleEvent*, *Identifiable*, *MultilanguageReferrable*, *Referrable*			
Aggregated by	BswInternalBehavior.event			
Attribute	***Type***	***Mult.***	***Kind***	***Note***
trigger	Trigger	0..1	ref	The trigger associated with this event. The trigger is external to this module. **Tags:** atp.Splitkey=trigger

Table B.2: BswExternalTriggerOccurredEvent

Class	**BswInternalTriggerOccurredEvent**			
Note	A BswEvent, which can happen sporadically. The event is activated by explicit calls from the module to the BSW Scheduler. The main purpose for such an event is to cause a context switch, e.g. from an ISR context into a task context. Activation and switching are handled within the same module or cluster only.			
Base	*ARObject*, *AbstractEvent*, *BswEvent*, *BswScheduleEvent*, *Identifiable*, *MultilanguageReferrable*, *Referrable*			
Aggregated by	BswInternalBehavior.event			
Attribute	***Type***	***Mult.***	***Kind***	***Note***
eventSource	BswInternalTriggering Point	0..1	ref	The activation point is the source of this event. **Tags:** atp.Splitkey=eventSource This Attribute is only used by the AUTOSAR Classic Platform.

Table B.3: BswInternalTriggerOccurredEvent

Class	**BswModeSwitchEvent**			
Note	A BswEvent resulting from a mode switch.			
Base	*ARObject*, *AbstractEvent*, *BswEvent*, *BswScheduleEvent*, *Identifiable*, *MultilanguageReferrable*, *Referrable*			
Aggregated by	BswInternalBehavior.event			
Attribute	***Type***	***Mult.***	***Kind***	***Note***

▽

△

Class	**BswModeSwitchEvent**			
activation	ModeActivationKind	0..1	attr	Kind of activation w.r.t. to the referred mode.
mode (ordered)	ModeDeclaration	0..2	iref	Reference to one or two Modes that initiate the Mode Switch Event. **InstanceRef implemented by:** ModeInBswModule DescriptionInstanceRef

Table B.4: BswModeSwitchEvent

Class	**BswModuleDescription**			
Note	Root element for the description of a single BSW module or BSW cluster. In case it describes a BSW module, the short name of this element equals the name of the BSW module. **Tags:** atp.recommendedPackage=BswModuleDescriptions This Class is only used by the AUTOSAR Classic Platform.			
Base	*ARElement*, *ARObject*, *AtpBlueprint*, *AtpClassifier*, *AtpFeature*, *AtpStructureElement*, *Collectable Element*, *Identifiable*, *MultilanguageReferrable*, *PackageableElement*, *Referrable*			
Aggregated by	ARPackage.element, *AtpClassifier*.atpFeature			
Attribute	***Type***	***Mult.***	***Kind***	***Note***
bswModule Dependency	BswModuleDependency	*	aggr	Describes the dependency to another BSW module. **Stereotypes:** atpVariation **Tags:** atp.Splitkey=bswModuleDependency, bswModule Dependency.shortName, bswModule Dependency.variationPoint.shortLabel vh.latestBindingTime=preCompileTime xml.sequenceOffset=20
bswModule Documentation	SwComponent Documentation	0..1	aggr	This adds a documentation to the BSW module. **Stereotypes:** atpVariation **Tags:** atp.Splitkey=bswModuleDocumentation, bswModule Documentation.variationPoint.shortLabel vh.latestBindingTime=preCompileTime xml.sequenceOffset=6
expectedEntry	BswModuleEntry	*	ref	Indicates an entry which is required by this module. Replacement of outgoingCallback / requiredEntry. **Stereotypes:** atpVariation **Tags:** atp.Splitkey=expectedEntry, expectedEntry.bswModule Entry, expectedEntry.variationPoint.shortLabel vh.latestBindingTime=preCompileTime
implemented Entry	BswModuleEntry	*	ref	Specifies an entry provided by this module which can be called by other modules. This includes "main" functions, interrupt routines, and callbacks. Replacement of providedEntry / expectedCallback. **Stereotypes:** atpVariation **Tags:** atp.Splitkey=implementedEntry, implementedEntry.bsw ModuleEntry, implementedEntry.variationPoint.shortLabel vh.latestBindingTime=preCompileTime

▽

△

Class	**BswModuleDescription**			
internalBehavior	BswInternalBehavior	*	aggr	The various BswInternalBehaviors associated with a Bsw ModuleDescription can be distributed over several physical files. Therefore the aggregation is <<atp Splitable>>. **Tags:** atp.Splitkey=internalBehavior, internalBehavior.short Name xml.sequenceOffset=65
moduleId	PositiveInteger	0..1	attr	Refers to the BSW Module Identifier defined by the AUTOSAR standard. For non-standardized modules, a proprietary identifier can be optionally chosen. **Tags:** xml.sequenceOffset=5
providedClient ServerEntry	BswModuleClientServer Entry	*	aggr	Specifies that this module provides a client server entry which can be called from another partition or core.This entry is declared locally to this context and will be connected to the requiredClientServerEntry of another or the same module via the configuration of the BSW Scheduler. **Stereotypes:** atpVariation **Tags:** atp.Splitkey=providedClientServerEntry, providedClient ServerEntry.shortName, providedClientServer Entry.variationPoint.shortLabel vh.latestBindingTime=preCompileTime xml.sequenceOffset=45
providedData	VariableDataPrototype	*	aggr	Specifies a data prototype provided by this module in order to be read from another partition or core.The providedData is declared locally to this context and will be connected to the requiredData of another or the same module via the configuration of the BSW Scheduler. **Stereotypes:** atpVariation **Tags:** atp.Splitkey=providedData, providedData.shortName, providedData.variationPoint.shortLabel vh.latestBindingTime=preCompileTime xml.sequenceOffset=55
providedMode Group	ModeDeclarationGroup Prototype	*	aggr	A set of modes which is owned and provided by this module or cluster. It can be connected to the required ModeGroups of other modules or clusters via the configuration of the BswScheduler. It can also be synchronized with modes provided via ports by an associated ServiceSwComponentType, EcuAbstraction SwComponentType or ComplexDeviceDriverSw ComponentType. **Stereotypes:** atpVariation **Tags:** atp.Splitkey=providedModeGroup, providedMode Group.shortName, providedModeGroup.variation Point.shortLabel vh.latestBindingTime=preCompileTime xml.sequenceOffset=25

▽

△

Class	**BswModuleDescription**			
releasedTrigger	Trigger	*	aggr	A Trigger released by this module or cluster. It can be connected to the requiredTriggers of other modules or clusters via the configuration of the BswScheduler. It can also be synchronized with Triggers provided via ports by an associated ServiceSwComponentType, Ecu AbstractionSwComponentType or ComplexDeviceDriver SwComponentType. **Stereotypes:** atpVariation **Tags:** atp.Splitkey=releasedTrigger, releasedTrigger.shortName, releasedTrigger.variationPoint.shortLabel vh.latestBindingTime=preCompileTime xml.sequenceOffset=35
requiredClient ServerEntry	BswModuleClientServer Entry	*	aggr	Specifies that this module requires a client server entry which can be implemented on another partition or core.This entry is declared locally to this context and will be connected to the providedClientServerEntry of another or the same module via the configuration of the BSW Scheduler. **Stereotypes:** atpVariation **Tags:** atp.Splitkey=requiredClientServerEntry, requiredClient ServerEntry.shortName, requiredClientServer Entry.variationPoint.shortLabel vh.latestBindingTime=preCompileTime xml.sequenceOffset=50
requiredData	VariableDataPrototype	*	aggr	Specifies a data prototype required by this module in oder to be provided from another partition or core.The required Data is declared locally to this context and will be connected to the providedData of another or the same module via the configuration of the BswScheduler. **Stereotypes:** atpVariation **Tags:** atp.Splitkey=requiredData, requiredData.shortName, requiredData.variationPoint.shortLabel vh.latestBindingTime=preCompileTime xml.sequenceOffset=60
requiredMode Group	ModeDeclarationGroup Prototype	*	aggr	Specifies that this module or cluster depends on a certain mode group. The requiredModeGroup is local to this context and will be connected to the providedModeGroup of another module or cluster via the configuration of the BswScheduler. **Stereotypes:** atpVariation **Tags:** atp.Splitkey=requiredModeGroup, requiredMode Group.shortName, requiredModeGroup.variation Point.shortLabel vh.latestBindingTime=preCompileTime xml.sequenceOffset=30

▽

△

Class	**BswModuleDescription**			
requiredTrigger	Trigger	*	aggr	Specifies that this module or cluster reacts upon an external trigger.This requiredTrigger is declared locally to this context and will be connected to the providedTrigger of another module or cluster via the configuration of the BswScheduler. **Stereotypes:** atpVariation **Tags:** atp.Splitkey=requiredTrigger, requiredTrigger.shortName, requiredTrigger.variationPoint.shortLabel vh.latestBindingTime=preCompileTime xml.sequenceOffset=40

Table B.5: BswModuleDescription

Class	***BswModuleEntity*** (abstract)			
Note	Specifies the smallest code fragment which can be described for a BSW module or cluster within AUTOSAR.			
Base	*ARObject*, *ExecutableEntity*, *Identifiable*, *MultilanguageReferrable*, *Referrable*			
Subclasses	BswCalledEntity, BswInterruptEntity, BswSchedulableEntity			
Aggregated by	BswInternalBehavior.entity			
Attribute	***Type***	***Mult.***	***Kind***	***Note***
accessedModeGroup	ModeDeclarationGroupPrototype	*	ref	A mode group which is accessed via API call by this entity. It shall be a ModeDeclarationGroupPrototype required by this module or cluster. **Stereotypes:** atpVariation **Tags:** atp.Splitkey=accessedModeGroup, accessedModeGroup.modeDeclarationGroupPrototype, accessedModeGroup.variationPoint.shortLabel vh.latestBindingTime=preCompileTime
activationPoint	BswInternalTriggeringPoint	*	ref	Activation point used by the module entity to activate one or more internal triggers. **Stereotypes:** atpVariation **Tags:** atp.Splitkey=activationPoint, activationPoint.bswInternalTriggeringPoint, activationPoint.variationPoint.shortLabel vh.latestBindingTime=preCompileTime This Attribute is only used by the AUTOSAR Classic Platform.
callPoint	BswModuleCallPoint	*	aggr	A call point used in the code of this entity. The variability of this association is especially targeted at debug scenarios: It is possible to have one variant calling into the AUTOSAR debug module and another one which doesn't. **Stereotypes:** atpVariation **Tags:** atp.Splitkey=callPoint, callPoint.shortName, callPoint.variationPoint.shortLabel vh.latestBindingTime=preCompileTime
dataReceivePoint	BswVariableAccess	*	aggr	The data is received via the BSW Scheduler. **Stereotypes:** atpVariation **Tags:** atp.Splitkey=dataReceivePoint, dataReceivePoint.shortName, dataReceivePoint.variationPoint.shortLabel vh.latestBindingTime=preCompileTime

▽

△

Class	***BswModuleEntity*** (abstract)			
dataSendPoint	BswVariableAccess	*	aggr	The data is sent via the BSW Scheduler. **Stereotypes:** atpVariation **Tags:** atp.Splitkey=dataSendPoint, dataSendPoint.shortName, dataSendPoint.variationPoint.shortLabel vh.latestBindingTime=preCompileTime
implemented Entry	BswModuleEntry	0..1	ref	The entry which is implemented by this module entity. **Tags:** atp.Splitkey=implementedEntry This Attribute is only used by the AUTOSAR Classic Platform.
issuedTrigger	Trigger	*	ref	A trigger issued by this entity via BSW Scheduler API call. It shall be a BswTrigger released (i.e. owned) by this module or cluster. **Stereotypes:** atpVariation **Tags:** atp.Splitkey=issuedTrigger, issuedTrigger.trigger, issued Trigger.variationPoint.shortLabel vh.latestBindingTime=preCompileTime
managedMode Group	ModeDeclarationGroup Prototype	*	ref	A mode group which is managed by this entity. It shall be a ModeDeclarationGroupPrototype provided by this module or cluster. **Stereotypes:** atpVariation **Tags:** atp.Splitkey=managedModeGroup, managedMode Group.modeDeclarationGroupPrototype, managedMode Group.variationPoint.shortLabel vh.latestBindingTime=preCompileTime
schedulerName Prefix	BswSchedulerName Prefix	0..1	ref	A prefix to be used in generated names for the Bsw ModuleScheduler in the context of this BswModuleEntity, for example entry point prototypes, macros for dealing with exclusive areas, header file names. Details are defined in the SWS RTE. The prefix supersedes default rules for the prefix of those names. **Tags:** atp.Splitkey=schedulerNamePrefix

Table B.6: BswModuleEntity

Class	**BswSchedulableEntity**			
Note	BSW module entity, which is designed for control by the BSW Scheduler. It may for example implement a so-called "main" function.			
Base	*ARObject*, *BswModuleEntity*, *ExecutableEntity*, *Identifiable*, *MultilanguageReferrable*, *Referrable*			
Aggregated by	BswInternalBehavior.entity			
Attribute	***Type***	***Mult.***	***Kind***	***Note***
–	–	–	–	–

Table B.7: BswSchedulableEntity

Class	**BswVariableAccess**
Note	The presence of a BswVariableAccess implies that a BswModuleEntity needs access to a VariableData Prototype via the BSW Scheduler. The kind of access is specified by the role in which the class is used.

▽

△

Class	**BswVariableAccess**			
Base	*ARObject*, *Referrable*			
Aggregated by	*BswModuleEntity*.dataReceivePoint, *BswModuleEntity*.dataSendPoint			
Attribute	***Type***	***Mult.***	***Kind***	***Note***
accessed Variable	VariableDataPrototype	0..1	ref	The data accessed via the BSW Scheduler. **Tags:** atp.Splitkey=accessedVariable
context Limitation	BswDistinguished Partition	*	ref	The existence of this reference indicates that the variable is received resp. sent only in the context of the referred BswDistinguishedPartitions. **Tags:** atp.Splitkey=contextLimitation

Table B.8: BswVariableAccess

Class	**ClientServerInterface**			
Note	A client/server interface declares a number of operations that can be invoked on a server by a client. **Tags:** atp.recommendedPackage=PortInterfaces			
Base	*ARElement*, *ARObject*, *AtpBlueprint*, *AtpClassifier*, *AtpType*, *CollectableElement*, *Identifiable*, *MultilanguageReferrable*, *PackageableElement*, *PortInterface*, *Referrable*			
Aggregated by	ARPackage.element			
Attribute	***Type***	***Mult.***	***Kind***	***Note***
operation	ClientServerOperation	*	aggr	`ClientServerOperation`(s) of this `ClientServerInterface`. **Stereotypes:** atpVariation **Tags:** atp.Splitkey=operation, operation.shortName, operation.variationPoint.shortLabel vh.latestBindingTime=blueprintDerivationTime This Attribute is only used by the AUTOSAR Classic Platform.
possibleError	ApplicationError	*	aggr	Application errors that are defined as part of this interface. **Tags:** atp.Splitkey=possibleError, possibleError.short Name

Table B.9: ClientServerInterface

Class	**CompositionSwComponentType**			
Note	A `CompositionSwComponentType` aggregates `SwComponentPrototype`s (that in turn are typed by `SwComponentType`)s as well as `SwConnector`s for primarily connecting `SwComponentPrototype`s among each others and towards the surface of the `CompositionSwComponentType`. By this means, a hierarchical structures of software-components can be created. **Tags:** atp.recommendedPackage=SwComponentTypes			
Base	*ARElement*, *ARObject*, *AtpBlueprint*, *AtpClassifier*, *AtpType*, *CollectableElement*, *Identifiable*, *MultilanguageReferrable*, *PackageableElement*, *Referrable*, *SwComponentType*			
Aggregated by	ARPackage.element			
Attribute	***Type***	***Mult.***	***Kind***	***Note***

▽

△

Class	**CompositionSwComponentType**			
component	SwComponent Prototype	*	aggr	The instantiated components that are part of this composition. The aggregation of `SwComponentPrototype` is subject to variability with the purpose to support the conditional existence of a `SwComponentPrototype`. Please be aware: if the conditional existence of `SwComponentPrototype`s is resolved post-build, the deselected `SwComponentPrototype`s are still contained in the ECUs build but the instances are inactive in that they are not scheduled by the RTE. The use case for having 0 components owned by the `CompositionSwComponentType` could be to deliver an empty `CompositionSwComponentType` to e.g. a supplier for filling the internal structure. **Stereotypes:** atpVariation **Tags:** atp.Splitkey=component, component.shortName, component.variationPoint.shortLabel vh.latestBindingTime=postBuild
connector	SwConnector	*	aggr	`SwConnector`s have the principal ability to establish a connection among `PortPrototype`s. They can have many roles in the context of a `CompositionSwComponentType`. Details are refined by subclasses. The aggregation of `SwConnector`s is subject to variability with the purpose to support variant data flow. **Stereotypes:** atpVariation **Tags:** atp.Splitkey=connector, connector.shortName, connector.variationPoint.shortLabel vh.latestBindingTime=postBuild
constantValue Mapping	ConstantSpecification MappingSet	*	ref	Reference to the `ConstantSpecificationMapping` to be applied for initValues of `PPortComSpec`s and `RPortComSpec`. **Tags:** atp.Splitkey=constantValueMapping
dataType Mapping	DataTypeMappingSet	*	ref	Reference to the `DataTypeMappingSet` to be applied for the used `ApplicationDataType`s in `PortInterface`s. Background: when developing subsystems it may happen that `ApplicationDataType`s are used on the surface of `CompositionSwComponentType`s. In this case it would be reasonable to be able to also provide the intended mapping to the `ImplementationDataType`s. However, this mapping shall be informal and not technically binding for the implementors mainly because the RTE generator is not concerned about the `CompositionSwComponentType`s. Rationale: if the mapping of `ApplicationDataType`s on the delegated and inner `PortPrototype` matches then the mapping to `ImplementationDataType`s is not impacting compatibility. **Tags:** atp.Splitkey=dataTypeMapping

▽

△

Class	**CompositionSwComponentType**			
instantiation RTEEventProps	InstantiationRTEEvent Props	*	aggr	This allows to define instantiation specific properties for RTE Events, in particular for instance specific scheduling. **Stereotypes:** atpVariation **Tags:** atp.Splitkey=instantiationRTEEventProps, instantiation RTEEventProps.shortLabel, instantiationRTEEvent Props.variationPoint.shortLabel vh.latestBindingTime=codeGenerationTime This Attribute is only used by the AUTOSAR Classic Platform.
physical Dimension Mapping	PhysicalDimension MappingSet	0..1	ref	This reference identifies the `PhysicalDimensionMappingSet` that is applicable in the context of the enclosing `CompositionSwComponentType`. The `PhysicalDimensionMapping`s contained in the `PhysicalDimensionMappingSet` shall be taken into account for the assessment of the compatibility of `PhysicalDimension`s in the context of creation of a `PortInterfaceMapping` in the scope of the `CompositionSwComponentType`. **Tags:** atp.Splitkey=physicalDimensionMapping

Table B.10: CompositionSwComponentType

Class	**CpSoftwareCluster**			
Note	This meta class provides the ability to define a CP Software Cluster. Each CP Software Cluster can be integrated and build individually. It defines the sub-set of hierarchical tree(s) of Software Components belonging to this CP Software Cluster. Resources required or provided by this CP Software Cluster are given in the according mappings. **Tags:** atp.recommendedPackage=CpSoftwareClusters This Class is only used by the AUTOSAR Classic Platform.			
Base	*ARElement*, *ARObject*, *CollectableElement*, *Identifiable*, *MultilanguageReferrable*, *Packageable Element*, *Referrable*			
Aggregated by	ARPackage.element			
Attribute	***Type***	***Mult.***	***Kind***	***Note***
softwareCluster Id	PositiveInteger	0..1	attr	This attribute represents the value of the id of the corresponding CP software cluster.
swComponent Assignment	SwComponent PrototypeAssignment	*	aggr	This is the collection of SwComponentPrototype Assignments **Stereotypes:** atpVariation **Tags:** atp.Splitkey=swComponentAssignment, swComponent Assignment.variationPoint.shortLabel vh.latestBindingTime=postBuild

▽

△

Class	**CpSoftwareCluster**			
swComposition	CompositionSw ComponentType	*	ref	Software Components in the context of a CompositionSw ComponentType belonging to this CP Software Cluster. This reference can be used to describe the belonging SWCs when the CP Software Cluster is described out of the context of a System, e.g. reusable CP Software Cluster. **Stereotypes:** atpVariation **Tags:** atp.Splitkey=swComposition, swComposition.composition SwComponentType, swComposition.variationPoint.short Label vh.latestBindingTime=systemDesignTime

Table B.11: CpSoftwareCluster

Class	**CpSoftwareClusterCommunicationResource**			
Note	Represents a single resource required or provided by a CP Software Cluster which relates to the port based communication on VFB level. This Class is only used by the AUTOSAR Classic Platform.			
Base	*ARObject*, *CpSoftwareClusterResource*, *Identifiable*, *MultilanguageReferrable*, *Referrable*			
Aggregated by	CpSoftwareClusterResourcePool.resource			
Attribute	*Type*	*Mult.*	*Kind*	*Note*
communication ResourceProps	CpSoftwareCluster Communication ResourceProps	0..1	aggr	This aggregation supports the further qualification of the enclosing CpSoftwareClusterCommunicationRecource by means of additional attributes depending on the nature of the CpSoftwareClusterCommunicationRecource. **Tags:** atp.Splitkey=communicationResourceProps

Table B.12: CpSoftwareClusterCommunicationResource

Class	***CpSoftwareClusterResource*** (abstract)			
Note	Represents a single resource required or provided by a CP Software Cluster. **Tags:** atp.recommendedPackage=Resources This Class is only used by the AUTOSAR Classic Platform.			
Base	*ARObject*, *Identifiable*, *MultilanguageReferrable*, *Referrable*			
Subclasses	CpSoftwareClusterCommunicationResource, CpSoftwareClusterServiceResource			
Aggregated by	CpSoftwareClusterResourcePool.resource			
Attribute	*Type*	*Mult.*	*Kind*	*Note*
dependent Resource	RoleBasedResource Dependency	*	aggr	Link to a resource which depends on this resource to implement them. **Tags:** atp.Splitkey=dependentResource
globalResource Id	PositiveInteger	0..1	attr	A unique identifiers per resource used for the connection process. The identifier is required to be unique in the scope of a single machine. If software clusters are designed to be reused on multiple machines the uniqueness requirements applies for all the intended machines.
isMandatory	Boolean	0..1	attr	This attribute indicates, that the resource is mandatory to operate the Software Cluster. If the resource is not provided on the machine the connection process of any Software Cluster requiring this resource gets aborted.

Table B.13: CpSoftwareClusterResource

Class	**CpSoftwareClusterResourcePool**			
Note	Represents the pool of resources which can be provided or required by CP Software Clusters. **Tags:** atp.recommendedPackage=CpSoftwareClusterResourcePools This Class is only used by the AUTOSAR Classic Platform.			
Base	*ARElement*, *ARObject*, *CollectableElement*, *Identifiable*, *MultilanguageReferrable*, *Packageable Element*, *Referrable*			
Aggregated by	ARPackage.element			
Attribute	***Type***	***Mult.***	***Kind***	***Note***
ecuScope	EcuInstance	*	ref	This reference identifies the EcuInstance in which the resource pool is defined. **Tags:** atp.Splitkey=ecuScope
resource	CpSoftwareCluster Resource	*	aggr	This aggregation represents the collection of resources in the enclosing resource pool. **Tags:** atp.Splitkey=resource, resource.shortName

Table B.14: CpSoftwareClusterResourcePool

Class	***DataMapping*** (abstract)			
Note	Mapping of port elements (data elements and parameters) to frames and signals.			
Base	*ARObject*			
Subclasses	ClientServerToSignalMapping, SenderReceiverToSignalGroupMapping, SenderReceiverToSignal Mapping, TriggerToSignalMapping			
Aggregated by	SystemMapping.dataMapping			
Attribute	***Type***	***Mult.***	***Kind***	***Note***
introduction	DocumentationBlock	0..1	aggr	This represents introductory documentation about the data mapping. **Tags:** atp.Splitkey=introduction

Table B.15: DataMapping

Class	**EcuInstance**			
Note	ECUInstances are used to define the ECUs used in the topology. The type of the ECU is defined by a reference to an ECU specified with the ECU resource description. **Tags:** atp.recommendedPackage=EcuInstances			
Base	*ARObject*, *CollectableElement*, *FibexElement*, *Identifiable*, *MultilanguageReferrable*, *Packageable Element*, *Referrable*			
Aggregated by	ARPackage.element			
Attribute	***Type***	***Mult.***	***Kind***	***Note***
associatedCom IPduGroup	ISignalIPduGroup	*	ref	With this reference it is possible to identify which ISignal IPduGroups are applicable for which Communication Connector/ ECU. Only top level ISignalIPduGroups shall be referenced by an EcuInstance. If an ISignalIPduGroup contains other ISignalIPduGroups than these contained ISignalIPdu Groups shall not be referenced by the EcuInstance. Contained ISignalIPduGroups are associated to an Ecu Instance via the top level ISignalIPduGroup. **Tags:** atp.Splitkey=associatedComIPduGroup This Attribute is only used by the AUTOSAR Classic Platform.



△

Class	**EcuInstance**			
associated ConsumedProvided ServiceInstance Group	ConsumedProvided ServiceInstanceGroup	*	ref	With this reference it is possible to identify which ConsumedProvidedServiceInstanceGroups are applicable for which ECUInstance. **Stereotypes:** atpVariation **Tags:** atp.Splitkey=associatedConsumedProvidedService InstanceGroup, associatedConsumedProvidedService InstanceGroup.consumedProvidedServiceInstanceGroup, associatedConsumedProvidedServiceInstance Group.variationPoint.shortLabel vh.latestBindingTime=postBuild
associatedPdur IPduGroup	PdurIPduGroup	*	ref	With this reference it is possible to identify which PduR IPdu Groups are applicable for which Communication Connector/ ECU. **Tags:** atp.Splitkey=associatedPdurIPduGroup
channel Synchronous Wakeup	Boolean	0..1	attr	If this parameter is available and set to true, then all available channels will be woken up as soon as at least one channel wakeup occurs. If PNCs are configured, then all PNCs will be requested upon a channel wakeup.
clientIdRange	ClientIdRange	0..1	aggr	Restriction of the Client Identifier for this Ecu to an allowed range of numerical values. The Client Identifier of the transaction handle is generated by the client RTE for inter-Ecu Client/Server communication. **Tags:** atp.Splitkey=clientIdRange
com Configuration GwTimeBase	TimeValue	0..1	attr	The period between successive calls to Com_Main FunctionRouteSignals of the AUTOSAR COM module in seconds. This Attribute is only used by the AUTOSAR Classic Platform.
com ConfigurationRx TimeBase	TimeValue	0..1	attr	The period between successive calls to Com_Main FunctionRx of the AUTOSAR COM module in seconds. This Attribute is only used by the AUTOSAR Classic Platform.
com ConfigurationTx TimeBase	TimeValue	0..1	attr	The period between successive calls to Com_Main FunctionTx of the AUTOSAR COM module in seconds. This Attribute is only used by the AUTOSAR Classic Platform.
comEnable MDTForCyclic Transmission	Boolean	0..1	attr	Enables for the Com module of this EcuInstance the minimum delay time monitoring for cyclic and repeated transmissions (TransmissionModeTiming has cyclic Timing assigned or eventControlledTiming with numberOf Repetitions > 0). This Attribute is only used by the AUTOSAR Classic Platform.
commController	Communication Controller	*	aggr	CommunicationControllers of the ECU. **Stereotypes:** atpVariation **Tags:** atp.Splitkey=commController, commController.short Name, commController.variationPoint.shortLabel vh.latestBindingTime=postBuild
connector	Communication Connector	*	aggr	All channels controlled by a single controller. **Stereotypes:** atpVariation **Tags:** atp.Splitkey=connector, connector.shortName, connector.variationPoint.shortLabel vh.latestBindingTime=postBuild

▽

△

Class	EcuInstance			
dltConfig	DltConfig	0..1	aggr	Describes the Dlt configuration on this EcuInstance. **Tags:** atp.Splitkey=dltConfig This Attribute is only used by the AUTOSAR Classic Platform.
doIpConfig	DoIpConfig	0..1	aggr	DoIp configuration on this EcuInstance. **Tags:** atp.Splitkey=doIpConfig atp.Status=draft This Attribute is only used by the AUTOSAR Classic Platform.
ecuTaskProxy	OsTaskProxy	*	ref	Reference to OsTaskProxies assigned to the Ecu Instance. **Tags:** atp.Splitkey=ecuTaskProxy This Attribute is only used by the AUTOSAR Classic Platform.
ethSwitchPort Group Derivation	Boolean	0..1	attr	Defines whether the derivation of SwitchPortGroups based on VLAN and/or CouplingPort.pncMapping shall be performed for this EcuInstance. If not defined the derivation shall not be done. This Attribute is only used by the AUTOSAR Classic Platform.
firewallRule	StateDependentFirewall	*	ref	Firewall rules defined in the context of an EcuInstance. **Tags:** atp.Splitkey=firewallRule
j1939Node	J1939Node	*	aggr	Optional collection of J1939Nodes defined on this Ecu Instance. **Tags:** atp.Splitkey=j1939Node, j1939Node.shortName This Attribute is only used by the AUTOSAR Classic Platform.
partition	EcuPartition	*	aggr	Optional definition of Partitions within an Ecu. **Tags:** atp.Splitkey=partition, partition.shortName This Attribute is only used by the AUTOSAR Classic Platform.
pncNmRequest	Boolean	0..1	attr	Defines if this EcuInstance shall request Nm on all its PhysicalChannels which have Nm variant set to FULL each time a PNC is requested.
pncPrepare SleepTimer	TimeValue	0..1	attr	Time in seconds the PNC state machine shall wait in PNC_PREPARE_SLEEP.
pnc Synchronous Wakeup	Boolean	0..1	attr	If this parameter is available and set to true then all available PNCs will be woken up as soon as a channel wakeup occurs. This is ensured by adding all PNCs to all channel wakeup sources during upstream mapping.
pnResetTime	TimeValue	0..1	attr	Specifies the runtime of the reset timer in seconds. This reset time is valid for the reset of PN requests in the EIRA and in the ERA.
sleepMode Supported	Boolean	0..1	attr	Specifies whether the ECU instance may be put to a "low power mode" • true: sleep mode is supported • false: sleep mode is not supported Note: This flag may only be set to "true" if the feature is supported by both hardware and basic software. This Attribute is only used by the AUTOSAR Classic Platform.

▽

△

Class	**EcuInstance**			
tcpIpIcmpProps	EthTcpIpIcmpProps	0..1	ref	EcuInstance specific ICMP (Internet Control Message Protocol) attributes **Tags:** atp.Splitkey=tcpIpIcmpProps This Attribute is only used by the AUTOSAR Classic Platform.
tcpIpProps	EthTcpIpProps	0..1	ref	EcuInstance specific TcpIp Stack attributes. **Tags:** atp.Splitkey=tcpIpProps This Attribute is only used by the AUTOSAR Classic Platform.
wakeUpOver BusSupported	Boolean	0..1	attr	Driver support for wakeup over Bus. This Attribute is only used by the AUTOSAR Classic Platform.

Table B.16: EcuInstance

Class	***ExecutableEntity*** (abstract)			
Note	Abstraction of executable code.			
Base	*ARObject*, *Identifiable*, *MultilanguageReferrable*, *Referrable*			
Subclasses	*BswModuleEntity*, RunnableEntity			
Attribute	***Type***	***Mult.***	***Kind***	***Note***
activation Reason	ExecutableEntity ActivationReason	*	aggr	If the `ExecutableEntity` provides at least one `activationReason` element the RTE resp. BSW Scheduler shall provide means to read the activation vector of this executable entity execution. If no `activationReason` element is provided the feature of being able to determine the activating RTEEvent is disabled for this `ExecutableEntity`. **Tags:** atp.Splitkey=activationReason, activation Reason.shortName
canEnter	ExclusiveArea	*	ref	This means that the executable entity can enter/leave the referenced exclusive area through explicit API calls. **Stereotypes:** atpVariation **Tags:** atp.Splitkey=canEnter, canEnter.exclusiveArea, can Enter.variationPoint.shortLabel vh.latestBindingTime=preCompileTime
exclusiveArea NestingOrder	ExclusiveAreaNesting Order	*	ref	This represents the set of ExclusiveAreaNestingOrders recognized by this ExecutableEntity. **Tags:** atp.Splitkey=exclusiveAreaNestingOrder
minimumStart Interval	TimeValue	0..1	attr	Specifies the time in seconds by which two consecutive starts of an ExecutableEntity are guaranteed to be separated.
reentrancyLevel	ReentrancyLevelEnum	0..1	attr	The reentrancy level of this ExecutableEntity. See the documentation of the enumeration type ReentrancyLevel Enum for details. Please note that nonReentrant interfaces can have also reentrant or multicoreReentrant implementations, and reentrant interfaces can also have multicoreReentrant implementations.

▽

△

Class	***ExecutableEntity*** (abstract)			
runsInside	ExclusiveArea	*	ref	The executable entity runs completely inside the referenced exclusive area. **Stereotypes:** atpVariation **Tags:** atp.Splitkey=runsInside, runsInside.exclusiveArea, runsInside.variationPoint.shortLabel vh.latestBindingTime=preCompileTime
swAddrMethod	SwAddrMethod	0..1	ref	Addressing method related to this code entity. Via an association to the same SwAddrMethod, it can be specified that several code entities (even of different modules or components) shall be located in the same memory without already specifying the memory section itself. **Tags:** atp.Splitkey=swAddrMethod

Table B.17: ExecutableEntity

Class	**ExternalTriggerOccurredEvent**			
Note	This event is raised when the referenced Trigger has occurred.			
Base	*ARObject*, *AbstractEvent*, *AtpClassifier*, *AtpFeature*, *AtpStructureElement*, *Identifiable*, *MultilanguageReferrable*, *RTEEvent*, *Referrable*			
Aggregated by	*AtpClassifier*.atpFeature, SwcInternalBehavior.event			
Attribute	***Type***	***Mult.***	***Kind***	***Note***
trigger	Trigger	0..1	iref	The referenced Trigger raises this ExternalTriggerOccurredEvent. **Tags:** atp.Splitkey=trigger, trigger.contextRPort, trigger.targetTrigger **InstanceRef implemented by:** RTriggerInAtomicSwcInstanceRef

Table B.18: ExternalTriggerOccurredEvent

Class	**ExternalTriggeringPoint**			
Note	If a RunnableEntity owns an ExternalTriggeringPoint it is entitled to raise an ExternalTriggerOccurred Event.			
Base	*ARObject*			
Aggregated by	RunnableEntity.externalTriggeringPoint			
Attribute	***Type***	***Mult.***	***Kind***	***Note***
ident	ExternalTriggeringPointIdent	0..1	aggr	The aggregation in the role ident provides the ability to make the ExternalTriggeringPoint identifiable. From the semantical point of view, the ExternalTriggering Point is considered a first-class Identifiable and therefore the aggregation in the role ident shall always exist (until it may be possible to let ModeAccessPoint directly inherit from Identifiable). **Stereotypes:** atpIdentityContributor **Tags:** xml.sequenceOffset=-100

▽

△

Class	**ExternalTriggeringPoint**			
trigger	Trigger	0..1	iref	The trigger taken for the ExternalTriggeringPoint. **Tags:** atp.Splitkey=trigger, trigger.contextPPort, trigger.target Trigger xml.namePlural=TRIGGER-IREF xml.roleElement=false xml.roleWrapperElement=true xml.typeElement=true xml.typeWrapperElement=false **InstanceRef implemented by:** PTriggerInAtomicSwc TypeInstanceRef

Table B.19: ExternalTriggeringPoint

Class	***InternalBehavior*** (abstract)			
Note	Common base class (abstract) for the internal behavior of both software components and basic software modules/clusters.			
Base	*ARObject*, *AtpClassifier*, *AtpFeature*, *AtpStructureElement*, *Identifiable*, *MultilanguageReferrable*, *Referrable*			
Subclasses	BswInternalBehavior, SwcInternalBehavior			
Aggregated by	*AtpClassifier*.atpFeature			
Attribute	***Type***	***Mult.***	***Kind***	***Note***
constant Memory	ParameterData Prototype	*	aggr	Describes a read only memory object containing characteristic value(s) implemented by this Internal Behavior. The shortName of ParameterDataPrototype has to be equal to the ''C' identifier of the described constant. The characteristic value(s) might be shared between Sw ComponentPrototypes of the same SwComponentType. The aggregation of constantMemory is subject to variability with the purpose to support variability in the software component or module implementations. Typically different algorithms in the implementation are requiring different number of memory objects. **Stereotypes:** atpVariation **Tags:** atp.Splitkey=constantMemory, constantMemory.short Name, constantMemory.variationPoint.shortLabel vh.latestBindingTime=preCompileTime
constantValue Mapping	ConstantSpecification MappingSet	*	ref	Reference to the ConstantSpecificationMapping to be applied for the particular InternalBehavior **Tags:** atp.Splitkey=constantValueMapping
dataType Mapping	DataTypeMappingSet	*	ref	Reference to the DataTypeMapping to be applied for the particular InternalBehavior **Tags:** atp.Splitkey=dataTypeMapping

▽

△

Class	***InternalBehavior*** (abstract)			
exclusiveArea	ExclusiveArea	*	aggr	This specifies an ExclusiveArea for this InternalBehavior. The exclusiveArea is local to the component resp. module. The aggregation of ExclusiveAreas is subject to variability. Note: the number of ExclusiveAreas might vary due to the conditional existence of RunnableEntities or BswModuleEntities. **Stereotypes:** atpVariation **Tags:** atp.Splitkey=exclusiveArea, exclusiveArea.shortName, exclusiveArea.variationPoint.shortLabel vh.latestBindingTime=preCompileTime
exclusiveArea NestingOrder	ExclusiveAreaNesting Order	*	aggr	This represents the set of ExclusiveAreaNestingOrder owned by the InternalBehavior. **Stereotypes:** atpVariation **Tags:** atp.Splitkey=exclusiveAreaNestingOrder, exclusiveArea NestingOrder.shortName, exclusiveAreaNesting Order.variationPoint.shortLabel vh.latestBindingTime=preCompileTime
staticMemory	VariableDataPrototype	*	aggr	Describes a read and writeable static memory object representing measurerment variables implemented by this software component. The term "static" is used in the meaning of "non-temporary" and does not necessarily specify a linker encapsulation. This kind of memory is only supported if supportsMultipleInstantiation is FALSE. The shortName of the VariableDataPrototype has to be equal with the ''C' identifier of the described variable. The aggregation of staticMemory is subject to variability with the purpose to support variability in the software component's implementations. Typically different algorithms in the implementation are requiring different number of memory objects. **Stereotypes:** atpVariation **Tags:** atp.Splitkey=staticMemory, staticMemory.shortName, staticMemory.variationPoint.shortLabel vh.latestBindingTime=preCompileTime

Table B.20: InternalBehavior

Class	**InternalTriggerOccurredEvent**			
Note	This event is raised when the referenced `InternalTriggeringPoint` has occurred.			
Base	*ARObject*, *AbstractEvent*, *AtpClassifier*, *AtpFeature*, *AtpStructureElement*, *Identifiable*, *MultilanguageReferrable*, *RTEEvent*, *Referrable*			
Aggregated by	*AtpClassifier*.atpFeature, SwcInternalBehavior.event			
Attribute	***Type***	***Mult.***	***Kind***	***Note***
eventSource	InternalTriggeringPoint	0..1	ref	The referenced `InternalTriggeringPoint` raises this `InternalTriggerOccurredEvent`. **Tags:** atp.Splitkey=eventSource

Table B.21: InternalTriggerOccurredEvent

Class	ModeAccessPoint			
Note	A ModeAccessPoint is required by a RunnableEntity owned by a Mode Manager or Mode User. Its semantics implies the ability to access the current mode (provided by the RTE) of a ModeDeclaration GroupPrototype's ModeDeclarationGroup.			
Base	*ARObject*			
Aggregated by	RunnableEntity.modeAccessPoint			
Attribute	**Type**	**Mult.**	**Kind**	**Note**
ident	ModeAccessPointIdent	0..1	aggr	The aggregation in the role ident provides the ability to make the ModeAccessPoint identifiable. From the semantical point of view, the ModeAccessPoint is considered a first-class Identifiable and therefore the aggregation in the role ident shall always exist (until it may be possible to let ModeAccessPoint directly inherit from Identifiable). **Stereotypes:** atpIdentityContributor **Tags:** xml.sequenceOffset=-100
modeGroup	ModeDeclarationGroup Prototype	0..1	iref	The mode declaration group that is accessed by this runnable. **Tags:** atp.Splitkey=modeGroup, modeGroup.contextPPort, modeGroup.contextRPort, modeGroup.targetModeGroup xml.typeElement=true **InstanceRef implemented by:** ModeGroupInAtomicSwc InstanceRef

Table B.22: ModeAccessPoint

Class	ModeDeclarationGroupPrototype			
Note	The ModeDeclarationGroupPrototype specifies a set of Modes (ModeDeclarationGroup) which is provided or required in the given context.			
Base	*ARObject*, *AtpFeature*, *AtpPrototype*, *Identifiable*, *MultilanguageReferrable*, *Referrable*			
Aggregated by	*AtpClassifier*.atpFeature, BswModuleDescription.providedModeGroup, BswModuleDescription.requiredModeGroup, FirewallStateSwitchInterface.firewallStateMachine, FunctionGroupSet.functionGroup, ModeSwitchInterface.modeGroup, Process.processStateMachine, StateManagementStateNotification.stateMachine			
Attribute	**Type**	**Mult.**	**Kind**	**Note**
swCalibrationAccess	SwCalibrationAccessEnum	0..1	attr	This allows for specifying whether or not the enclosing ModeDeclarationGroupPrototype can be measured at run-time. This Attribute is only used by the AUTOSAR Classic Platform.
type	ModeDeclarationGroup	0..1	tref	The "collection of ModeDeclarations" (= ModeDeclaration Group) supported by a component **Stereotypes:** isOfType **Tags:** atp.Splitkey=type

Table B.23: ModeDeclarationGroupPrototype

Class	ModeSwitchInterface
Note	A mode switch interface declares a `ModeDeclarationGroupPrototype` to be sent and received. **Tags:** atp.recommendedPackage=PortInterfaces
Base	*ARElement*, *ARObject*, *AtpBlueprint*, *AtpClassifier*, *AtpType*, *CollectableElement*, *Identifiable*, *MultilanguageReferrable*, *PackageableElement*, *PortInterface*, *Referrable*
Aggregated by	ARPackage.element

▽

△

Class	**ModeSwitchInterface**			
Attribute	***Type***	***Mult.***	***Kind***	***Note***
modeGroup	ModeDeclarationGroup Prototype	0..1	aggr	The `ModeDeclarationGroupPrototype` of this mode interface. **Tags:** atp.Splitkey=modeGroup, modeGroup.shortName

Table B.24: ModeSwitchInterface

Class	**ModeSwitchPoint**			
Note	A `ModeSwitchPoint` is required by a `RunnableEntity` owned a Mode Manager. Its semantics implies the ability to initiate a mode switch.			
Base	*ARObject*, *AbstractAccessPoint*, *AtpClassifier*, *AtpFeature*, *AtpStructureElement*, *Identifiable*, *MultilanguageReferrable*, *Referrable*			
Aggregated by	*AtpClassifier*.atpFeature, RunnableEntity.modeSwitchPoint			
Attribute	***Type***	***Mult.***	***Kind***	***Note***
modeGroup	ModeDeclarationGroup Prototype	0..1	iref	The mode declaration group that is switched by this runnable. **Tags:** atp.Splitkey=modeGroup, modeGroup.context PPort, modeGroup.targetModeGroup **InstanceRef implemented by:** PModeGroupInAtomic SwcInstanceRef

Table B.25: ModeSwitchPoint

Class	**NonqueuedSenderComSpec**			
Note	Communication attributes for non-queued sender/receiver communication (sender side)			
Base	*ARObject*, *PPortComSpec*, *SenderComSpec*			
Aggregated by	*AbstractProvidedPortPrototype*.providedComSpec, PortPrototypeBlueprint.providedComSpec			
Attribute	***Type***	***Mult.***	***Kind***	***Note***
dataFilter	DataFilter	0..1	aggr	The applicable filter algorithm for filtering the value of the corresponding dataElement. **Tags:** atp.Splitkey=dataFilter
initValue	ValueSpecification	0..1	aggr	Initial value to be sent if sender component is not yet fully initialized, but receiver needs data already. **Tags:** atp.Splitkey=initValue

Table B.26: NonqueuedSenderComSpec

Class	**PPortPrototype**			
Note	Component port providing a certain port interface.			
Base	*ARObject*, *AbstractProvidedPortPrototype*, *AtpFeature*, *AtpPrototype*, *Identifiable*, *MultilanguageReferrable*, *PortPrototype*, *Referrable*			
Aggregated by	*AtpClassifier*.atpFeature, *SwComponentType*.port			
Attribute	***Type***	***Mult.***	***Kind***	***Note***
provided Interface	PortInterface	0..1	tref	The interface that this port provides. **Stereotypes:** isOfType **Tags:** atp.Splitkey=providedInterface

Table B.27: PPortPrototype

Class	ParameterAccess			
Note	The presence of a ParameterAccess implies that a RunnableEntity needs access to a ParameterDataPrototype.			
Base	*ARObject*, *AbstractAccessPoint*, *AtpClassifier*, *AtpFeature*, *AtpStructureElement*, *Identifiable*, *MultilanguageReferrable*, *Referrable*			
Aggregated by	*AtpClassifier*.atpFeature, RunnableEntity.parameterAccess			
Attribute	**Type**	**Mult.**	**Kind**	**Note**
accessed Parameter	AutosarParameterRef	0..1	aggr	Reference to the accessed calibration parameter. **Tags:** atp.Splitkey=accessedParameter
swDataDef Props	SwDataDefProps	0..1	aggr	This allows denote instance and access specific properties, mainly input values and common axis. **Tags:** atp.Splitkey=swDataDefProps

Table B.28: ParameterAccess

Class	ParameterDataPrototype			
Note	A ParameterDataPrototype represents a formalized generic piece of information that is typically immutable by the application software layer, but mutable by measurement and calibration tools. ParameterDataPrototype is used in various contexts and the specific context gives the otherwise generic ParameterDataPrototype a dedicated semantics.			
Base	*ARObject*, *AtpFeature*, *AtpPrototype*, *AutosarDataPrototype*, *DataPrototype*, *Identifiable*, *Multilanguage Referrable*, *Referrable*			
Aggregated by	*AtpClassifier*.atpFeature, BswInternalBehavior.perInstanceParameter, *InternalBehavior*.constant Memory, NvBlockDescriptor.romBlock, ParameterInterface.parameter, SwcInternalBehavior.perInstance Parameter, SwcInternalBehavior.sharedParameter			
Attribute	**Type**	**Mult.**	**Kind**	**Note**
initValue	ValueSpecification	0..1	aggr	Specifies initial value(s) of the ParameterDataPrototype **Tags:** atp.Splitkey=initValue

Table B.29: ParameterDataPrototype

Class	PortElementToCommunicationResourceMapping			
Note	This meta class maps a communication resource to CP Software Clusters. In this case the kind of Port Prototype specified whether the Software Cluster has to provide or to require the resource. This Class is only used by the AUTOSAR Classic Platform.			
Base	*ARObject*, *Identifiable*, *MultilanguageReferrable*, *Referrable*			
Aggregated by	CpSoftwareClusterMappingSet.portElementToComResourceMapping, SystemMapping.portElementTo ComResourceMapping			
Attribute	**Type**	**Mult.**	**Kind**	**Note**
clientServer Operation	ClientServerOperation	0..1	iref	ClientServerOperation instance qualifying the communication resource **Tags:** atp.Splitkey=clientServerOperation, clientServer Operation.contextComposition, clientServer Operation.contextComponent, clientServer Operation.contextPort, clientServerOperation.target Operation **InstanceRef implemented by:** OperationInSystem InstanceRef
communication Resource	CpSoftwareCluster Communication Resource	0..1	ref	Communication resource for which the mapping applies. **Tags:** atp.Splitkey=communicationResource

▽

△

Class	**PortElementToCommunicationResourceMapping**			
mode Declaration GroupPrototype	ModeDeclarationGroup Prototype	0..1	iref	ModeDeclarationGroupPrototype instance qualifying the communication resource **Tags:** atp.Splitkey=modeDeclarationGroupPrototype, modeDeclarationGroupPrototype.contextComposition, modeDeclarationGroupPrototype.contextComponent, modeDeclarationGroupPrototype.contextPort, mode DeclarationGroupPrototype.targetModeDeclarationGroup Prototype **InstanceRef implemented by:** ModeDeclarationGroup PrototypeInSystemInstanceRef
parameterData Prototype	ParameterData Prototype	0..1	iref	ParameterDataPrototype instance qualifying the communication resource. **Tags:** atp.Splitkey=parameterDataPrototype, parameter DataPrototype.contextComposition, parameterData Prototype.contextComponent, parameterData Prototype.contextPort, parameterDataPrototype.target ParameterDataPrototype **InstanceRef implemented by:** ParameterDataPrototype InSystemInstanceRef
trigger	Trigger	0..1	iref	Trigger instance qualifying the communication resource. **Tags:** atp.Splitkey=trigger, trigger.contextComposition, trigger.contextComponent, trigger.contextPort, trigger.targetTrigger **InstanceRef implemented by:** TriggerInSystemInstance Ref
variableData Prototype	VariableDataPrototype	0..1	iref	VariableDataPrototype instance qualifying the communication resource **Tags:** atp.Splitkey=variableDataPrototype, variableData Prototype.contextComponent, variableData Prototype.contextComposition, variableData Prototype.contextPort, variableDataPrototype.targetData Prototype **InstanceRef implemented by:** VariableDataPrototypeIn SystemInstanceRef

Table B.30: PortElementToCommunicationResourceMapping

Class	***PortInterface*** (abstract)			
Note	Abstract base class for an interface that is either provided or required by a port of a software component.			
Base	*ARElement*, *ARObject*, *AtpBlueprint*, *AtpClassifier*, *AtpType*, *CollectableElement*, *Identifiable*, *MultilanguageReferrable*, *PackageableElement*, *Referrable*			
Subclasses	ClientServerInterface, *DataInterface*, ModeSwitchInterface, TriggerInterface			
Aggregated by	ARPackage.element			
Attribute	***Type***	***Mult.***	***Kind***	***Note***

▽

△

Class	***PortInterface*** (abstract)			
isService	Boolean	0..1	attr	This flag is set if the `PortInterface` is to be used for communication between an • `ApplicationSwComponentType` or • `ServiceProxySwComponentType` or • `SensorActuatorSwComponentType` or • `ComplexDeviceDriverSwComponentType` • `ServiceSwComponentType` • `EcuAbstractionSwComponentType` and a `ServiceSwComponentType` (namely an AUTOSAR Service) located on the same ECU. Otherwise the flag is not set. **Stereotypes:** atpVariation **Tags:** vh.latestBindingTime=blueprintDerivationTime This Attribute is only used by the AUTOSAR Classic Platform.
serviceKind	ServiceProviderEnum	0..1	attr	This attribute provides further details about the nature of the applied service. This Attribute is only used by the AUTOSAR Classic Platform.

Table B.31: PortInterface

Class	***PortPrototype*** (abstract)			
Note	Base class for the ports of an AUTOSAR software component. The aggregation of PortPrototypes is subject to variability with the purpose to support the conditional existence of ports.			
Base	*ARObject*, *AtpFeature*, *AtpPrototype*, *Identifiable*, *MultilanguageReferrable*, *Referrable*			
Subclasses	*AbstractProvidedPortPrototype*, *AbstractRequiredPortPrototype*			
Aggregated by	*AtpClassifier*.atpFeature, *SwComponentType*.port			
Attribute	***Type***	***Mult.***	***Kind***	***Note***
clientServer Annotation	ClientServerAnnotation	*	aggr	Annotation of this `PortPrototype` with respect to client/server communication. **Tags:** atp.Splitkey=clientServerAnnotation
delegatedPort Annotation	DelegatedPort Annotation	0..1	aggr	Annotations on this delegated port. **Tags:** atp.Splitkey=delegatedPortAnnotation
ioHwAbstraction Server Annotation	IoHwAbstractionServer Annotation	*	aggr	Annotations on this IO Hardware Abstraction port. **Tags:** atp.Splitkey=ioHwAbstractionServerAnnotation
modePort Annotation	ModePortAnnotation	*	aggr	Annotations on this mode port. **Tags:** atp.Splitkey=modePortAnnotation
nvDataPort Annotation	NvDataPortAnnotation	*	aggr	Annotations on this non voilatile data port. **Tags:** atp.Splitkey=nvDataPortAnnotation
parameterPort Annotation	ParameterPort Annotation	*	aggr	Annotations on this parameter port. **Tags:** atp.Splitkey=parameterPortAnnotation
senderReceiver Annotation	SenderReceiver Annotation	*	aggr	Collection of annotations of this ports sender/receiver communication. **Tags:** atp.Splitkey=senderReceiverAnnotation
triggerPort Annotation	TriggerPortAnnotation	*	aggr	Annotations on this trigger port. **Tags:** atp.Splitkey=triggerPortAnnotation

Table B.32: PortPrototype

Class	**RunnableEntity**			
Note	A `RunnableEntity` represents the smallest code-fragment that is provided by an `AtomicSwComponentType` and are executed under control of the RTE. `RunnableEntity`s are for instance set up to respond to data reception or operation invocation on a server.			
Base	*ARObject*, *AtpClassifier*, *AtpFeature*, *AtpStructureElement*, *ExecutableEntity*, *Identifiable*, *MultilanguageReferrable*, *Referrable*			
Aggregated by	*AtpClassifier*.atpFeature, SwcInternalBehavior.runnable			
Attribute	***Type***	***Mult.***	***Kind***	***Note***
argument (ordered)	RunnableEntity Argument	*	aggr	This represents the formal definition of an argument to a RunnableEntity.
asynchronous ServerCall ResultPoint	AsynchronousServer CallResultPoint	*	aggr	The server call result point admits a runnable to fetch the result of an asynchronous server call. The aggregation of AsynchronousServerCallResultPoint is subject to variability with the purpose to support the conditional existence of client server PortPrototypes and the variant existence of server call result points in the implementation. **Stereotypes:** atpVariation **Tags:** atp.Splitkey=asynchronousServerCallResultPoint, asynchronousServerCallResultPoint.shortName, asynchronousServerCallResultPoint.variationPoint.shortLabel vh.latestBindingTime=preCompileTime This Attribute is only used by the AUTOSAR Classic Platform.
canBeInvoked Concurrently	Boolean	0..1	attr	If the value of this attribute is set to "true" the enclosing `RunnableEntity` can be invoked concurrently (even for one instance of the corresponding `AtomicSwComponentType`). This implies that it is the responsibility of the implementation of the `RunnableEntity` to take care of this form of concurrency.
dataRead Access	VariableAccess	*	aggr	RunnableEntity has implicit read access to dataElement of a sender-receiver PortPrototype or nv data of a nv data PortPrototype. The aggregation of dataReadAccess is subject to variability with the purpose to support the conditional existence of sender receiver ports or the variant existence of dataReadAccess in the implementation. **Stereotypes:** atpVariation **Tags:** atp.Splitkey=dataReadAccess, dataReadAccess.shortName, dataReadAccess.variationPoint.shortLabel vh.latestBindingTime=preCompileTime



△

Class	**RunnableEntity**			
dataReceive PointBy Argument	VariableAccess	*	aggr	RunnableEntity has explicit read access to dataElement of a sender-receiver PortPrototype or nv data of a nv data PortPrototype. The result is passed back to the application by means of an argument in the function signature. The aggregation of dataReceivePointByArgument is subject to variability with the purpose to support the conditional existence of sender receiver PortPrototype or the variant existence of data receive points in the implementation. **Stereotypes:** atpVariation **Tags:** atp.Splitkey=dataReceivePointByArgument, dataReceive PointByArgument.shortName, dataReceivePointBy Argument.variationPoint.shortLabel vh.latestBindingTime=preCompileTime
dataReceive PointByValue	VariableAccess	*	aggr	RunnableEntity has explicit read access to dataElement of a sender-receiver PortPrototype or nv data of a nv data PortPrototype. The result is passed back to the application by means of the return value. The aggregation of dataReceivePointBy Value is subject to variability with the purpose to support the conditional existence of sender receiver ports or the variant existence of data receive points in the implementation. **Stereotypes:** atpVariation **Tags:** atp.Splitkey=dataReceivePointByValue, dataReceivePoint ByValue.shortName, dataReceivePointByValue.variation Point.shortLabel vh.latestBindingTime=preCompileTime
dataSendPoint	VariableAccess	*	aggr	RunnableEntity has explicit write access to dataElement of a sender-receiver PortPrototype or nv data of a nv data PortPrototype. The aggregation of dataSendPoint is subject to variability with the purpose to support the conditional existence of sender receiver PortPrototype or the variant existence of data send points in the implementation. **Stereotypes:** atpVariation **Tags:** atp.Splitkey=dataSendPoint, dataSendPoint.shortName, dataSendPoint.variationPoint.shortLabel vh.latestBindingTime=preCompileTime
dataWrite Access	VariableAccess	*	aggr	RunnableEntity has implicit write access to dataElement of a sender-receiver PortPrototype or nv data of a nv data PortPrototype. The aggregation of dataWriteAccess is subject to variability with the purpose to support the conditional existence of sender receiver ports or the variant existence of dataWriteAccess in the implementation. **Stereotypes:** atpVariation **Tags:** atp.Splitkey=dataWriteAccess, dataWriteAccess.short Name, dataWriteAccess.variationPoint.shortLabel vh.latestBindingTime=preCompileTime

▽

△

Class	**RunnableEntity**			
external TriggeringPoint	ExternalTriggeringPoint	*	aggr	The aggregation of ExternalTriggeringPoint is subject to variability with the purpose to support the conditional existence of trigger ports or the variant existence of external triggering points in the implementation. **Stereotypes:** atpVariation **Tags:** atp.Splitkey=externalTriggeringPoint, externalTriggering Point.ident.shortName, externalTriggeringPoint.variation Point.shortLabel vh.latestBindingTime=preCompileTime
internal TriggeringPoint	InternalTriggeringPoint	*	aggr	The aggregation of InternalTriggeringPoint is subject to variability with the purpose to support the variant existence of internal triggering points in the implementation. **Stereotypes:** atpVariation **Tags:** atp.Splitkey=internalTriggeringPoint, internalTriggering Point.shortName, internalTriggeringPoint.variation Point.shortLabel vh.latestBindingTime=preCompileTime
modeAccess Point	ModeAccessPoint	*	aggr	The runnable has a mode access point. The aggregation of ModeAccessPoint is subject to variability with the purpose to support the conditional existence of mode ports or the variant existence of mode access points in the implementation. **Stereotypes:** atpVariation **Tags:** atp.Splitkey=modeAccessPoint, modeAccess Point.ident.shortName, modeAccessPoint.variation Point.shortLabel vh.latestBindingTime=preCompileTime
modeSwitch Point	ModeSwitchPoint	*	aggr	The runnable has a mode switch point. The aggregation of ModeSwitchPoint is subject to variability with the purpose to support the conditional existence of mode ports or the variant existence of mode switch points in the implementation. **Stereotypes:** atpVariation **Tags:** atp.Splitkey=modeSwitchPoint, modeSwitchPoint.short Name, modeSwitchPoint.variationPoint.shortLabel vh.latestBindingTime=preCompileTime
parameter Access	ParameterAccess	*	aggr	The presence of a ParameterAccess implies that a RunnableEntity needs read only access to a Parameter DataPrototype which may either be local or within a Port Prototype. The aggregation of ParameterAccess is subject to variability with the purpose to support the conditional existence of parameter ports and component local parameters as well as the variant existence of Parameter Access (points) in the implementation. **Stereotypes:** atpVariation **Tags:** atp.Splitkey=parameterAccess, parameterAccess.short Name, parameterAccess.variationPoint.shortLabel vh.latestBindingTime=preCompileTime

▽

△

Class	**RunnableEntity**			
readLocal Variable	VariableAccess	*	aggr	The presence of a readLocalVariable implies that a RunnableEntity needs read access to a VariableData Prototype in the role of implicitInterRunnableVariable or explicitInterRunnableVariable. The aggregation of readLocalVariable is subject to variability with the purpose to support the conditional existence of implicitInterRunnableVariable and explicit InterRunnableVariable or the variant existence of read LocalVariable (points) in the implementation. **Stereotypes:** atpVariation **Tags:** atp.Splitkey=readLocalVariable, readLocalVariable.short Name, readLocalVariable.variationPoint.shortLabel vh.latestBindingTime=preCompileTime
serverCallPoint	ServerCallPoint	*	aggr	The RunnableEntity has a ServerCallPoint. The aggregation of ServerCallPoint is subject to variability with the purpose to support the conditional existence of client server PortPrototypes or the variant existence of server call points in the implementation. **Stereotypes:** atpVariation **Tags:** atp.Splitkey=serverCallPoint, serverCallPoint.shortName, serverCallPoint.variationPoint.shortLabel vh.latestBindingTime=preCompileTime This Attribute is only used by the AUTOSAR Classic Platform.
symbol	CIdentifier	0..1	attr	The symbol describing this `RunnableEntity`'s entry point. This is considered the API of the `RunnableEntity` and is required during the RTE contract phase.
waitPoint	WaitPoint	*	aggr	The `WaitPoint` associated with the `RunnableEntity`. **Tags:** atp.Splitkey=waitPoint, waitPoint.shortName
writtenLocal Variable	VariableAccess	*	aggr	The presence of a writtenLocalVariable implies that a RunnableEntity needs write access to a VariableData Prototype in the role of implicitInterRunnableVariable or explicitInterRunnableVariable. The aggregation of writtenLocalVariable is subject to variability with the purpose to support the conditional existence of implicitInterRunnableVariable and explicit InterRunnableVariable or the variant existence of written LocalVariable (points) in the implementation. **Stereotypes:** atpVariation **Tags:** atp.Splitkey=writtenLocalVariable, writtenLocal Variable.shortName, writtenLocalVariable.variation Point.shortLabel vh.latestBindingTime=preCompileTime

Table B.33: RunnableEntity

Class	**SenderReceiverInterface**
Note	A sender/receiver interface declares a number of data elements to be sent and received. **Tags:** atp.recommendedPackage=PortInterfaces
Base	*ARElement*, *ARObject*, *AtpBlueprint*, *AtpClassifier*, *AtpType*, *CollectableElement*, *DataInterface*, *Identifiable*, *MultilanguageReferrable*, *PackageableElement*, *PortInterface*, *Referrable*
Aggregated by	ARPackage.element

▽

△

Class	**SenderReceiverInterface**			
Attribute	***Type***	***Mult.***	***Kind***	***Note***
dataElement	VariableDataPrototype	*	aggr	The data elements of this `SenderReceiverInterface`. **Tags:** atp.Splitkey=dataElement, dataElement.shortName
invalidationPolicy	InvalidationPolicy	*	aggr	InvalidationPolicy for a particular dataElement **Tags:** atp.Splitkey=invalidationPolicy
metaDataItemSet	MetaDataItemSet	*	aggr	This aggregation defines fixed sets of meta-data items associated with `dataElement`s of the enclosing `SenderReceiverInterface` **Tags:** atp.Splitkey=metaDataItemSet

Table B.34: SenderReceiverInterface

Class	***ServerCallPoint*** (abstract)			
Note	If a RunnableEntity owns a `ServerCallPoint` it is entitled to invoke a particular `ClientServerOperation` of a specific `RPortPrototype` of the corresponding `AtomicSwComponentType`. This Class is only used by the AUTOSAR Classic Platform.			
Base	*ARObject*, *AbstractAccessPoint*, *AtpClassifier*, *AtpFeature*, *AtpStructureElement*, *Identifiable*, *MultilanguageReferrable*, *Referrable*			
Subclasses	AsynchronousServerCallPoint, SynchronousServerCallPoint			
Aggregated by	*AtpClassifier*.atpFeature, RunnableEntity.serverCallPoint			
Attribute	***Type***	***Mult.***	***Kind***	***Note***
operation	ClientServerOperation	0..1	iref	The operation that is called by this runnable. **Tags:** atp.Splitkey=operation, operation.contextRPort, operation.targetRequiredOperation **InstanceRef implemented by:** ROperationInAtomicSwcInstanceRef
timeout	TimeValue	0..1	attr	Time in seconds before the server call times out and returns with an error message. It depends on the call type (synchronous or asynchronous) how this is reported.

Table B.35: ServerCallPoint

Class	**SwcModeSwitchEvent**			
Note	This event is raised when the specified mode change occurs.			
Base	*ARObject*, *AbstractEvent*, *AtpClassifier*, *AtpFeature*, *AtpStructureElement*, *Identifiable*, *MultilanguageReferrable*, *RTEEvent*, *Referrable*			
Aggregated by	*AtpClassifier*.atpFeature, SwcInternalBehavior.event			
Attribute	***Type***	***Mult.***	***Kind***	***Note***
activation	ModeActivationKind	0..1	attr	Specifies if the event is raised on entering or exiting a specific mode or is raised on the transition between two modes.
mode (ordered)	ModeDeclaration	0..2	iref	The referenced mode or the transition between two modes raises this SwcModeSwitchEvent. **InstanceRef implemented by:** RModeInAtomicSwcInstanceRef

Table B.36: SwcModeSwitchEvent

Class	Trigger			
Note	A trigger which is provided (i.e. released) or required (i.e. used to activate something) in the given context.			
Base	*ARObject*, *AtpClassifier*, *AtpFeature*, *AtpStructureElement*, *Identifiable*, *MultilanguageReferrable*, *Referrable*			
Aggregated by	*AtpClassifier*.atpFeature, BswModuleDescription.releasedTrigger, BswModuleDescription.requiredTrigger, ServiceInterface.trigger, TriggerInterface.trigger			
Attribute	**Type**	**Mult.**	**Kind**	**Note**
swImplPolicy	SwImplPolicyEnum	0..1	attr	This attribute, when set to value queued, allows for a queued processing of Triggers. This Attribute is only used by the AUTOSAR Classic Platform.
triggerPeriod	MultidimensionalTime	0..1	aggr	Optional definition of a period in case of a periodically (time or angle) driven external trigger. **Tags:** atp.Splitkey=triggerPeriod This Attribute is only used by the AUTOSAR Classic Platform.

Table B.37: Trigger

Class	TriggerInterface			
Note	A trigger interface declares a number of triggers that can be sent by an trigger source. **Tags:** atp.recommendedPackage=PortInterfaces			
Base	*ARElement*, *ARObject*, *AtpBlueprint*, *AtpClassifier*, *AtpType*, *CollectableElement*, *Identifiable*, *MultilanguageReferrable*, *PackageableElement*, *PortInterface*, *Referrable*			
Aggregated by	ARPackage.element			
Attribute	**Type**	**Mult.**	**Kind**	**Note**
trigger	Trigger	*	aggr	The Trigger of this trigger interface. **Tags:** atp.Splitkey=trigger, trigger.shortName

Table B.38: TriggerInterface

Class	VariableAccess			
Note	The presence of a `VariableAccess` implies that a `RunnableEntity` needs access to a `VariableDataPrototype`. The kind of access is specified by the role in which the class is used.			
Base	*ARObject*, *AbstractAccessPoint*, *AtpClassifier*, *AtpFeature*, *AtpStructureElement*, *Identifiable*, *MultilanguageReferrable*, *Referrable*			
Aggregated by	*AtpClassifier*.atpFeature, *ReceiverComSpec*.replaceWith, RunnableEntity.dataReadAccess, RunnableEntity.dataReceivePointByArgument, RunnableEntity.dataReceivePointByValue, RunnableEntity.dataSendPoint, RunnableEntity.dataWriteAccess, RunnableEntity.readLocalVariable, RunnableEntity.writtenLocalVariable			
Attribute	**Type**	**Mult.**	**Kind**	**Note**
accessedVariable	AutosarVariableRef	0..1	aggr	This denotes the accessed variable. **Tags:** atp.Splitkey=accessedVariable
scope	VariableAccessScopeEnum	0..1	attr	This attribute allows for constraining the scope of the corresponding communication. For example, it possible to express whether the communication is intended to cross the boundary of an ECU or whether it is intended not to cross the boundary of a single partition.

Table B.39: VariableAccess

Class	**VariableDataPrototype**			
Note	A `VariableDataPrototype` represents a formalized generic piece of information that is typically mutable by the application software layer. `VariableDataPrototype` is used in various contexts and the specific context gives the otherwise generic `VariableDataPrototype` a dedicated semantics.			
Base	*ARObject*, *AtpFeature*, *AtpPrototype*, *AutosarDataPrototype*, *DataPrototype*, *Identifiable*, *Multilanguage Referrable*, *Referrable*			
Aggregated by	ApplicationInterface.indication, *AtpClassifier*.atpFeature, BswInternalBehavior.arTypedPerInstance Memory, BswModuleDescription.providedData, BswModuleDescription.requiredData, BulkNvData Descriptor.bulkNvBlock, DiagnosticSovdAccessArgument.contentObject, *InternalBehavior*.staticMemory, NvBlockDescriptor.ramBlock, NvDataInterface.nvData, SenderReceiverInterface.dataElement, Service Interface.event, SwcInternalBehavior.arTypedPerInstanceMemory, SwcInternalBehavior.explicitInter RunnableVariable, SwcInternalBehavior.implicitInterRunnableVariable			
Attribute	***Type***	***Mult.***	***Kind***	***Note***
initValue	ValueSpecification	0..1	aggr	Specifies initial value(s) of the VariableDataPrototype **Tags:** atp.Splitkey=initValue

Table B.40: VariableDataPrototype

C Referenced ECUC Configuration Parameters

C.1 BswM

C.1.1 BswMRule

[ECUC_BswM_00806] Definition of EcucParamConfContainerDef BswMRule

Container Name	BswMRule	
Parent Container	BswMArbitration	
Upstream mapping defined	–	
Description	Each instance of this container describes a BswM arbitration rule. The rule either consists of a simple mode condition or a more complex logical expression. This container also references the action lists that shall be invoked when the rule is evaluated to True or False.	
Multiplicity	0..*	
Post-Build Multiplicity	Loadable	Selectable
Configuration Parameters		

Included Parameters		
Parameter Name	**Multiplicity**	**ECUC ID**
BswMNestedExecutionOnly	1	[ECUC_BswM_00935]
BswMRuleInitState	1	[ECUC_BswM_00888]
BswMRuleExpressionRef	1	[ECUC_BswM_00819]
BswMRuleFalseActionList	0..1	[ECUC_BswM_00818]
BswMRuleTrueActionList	0..1	[ECUC_BswM_00817]

No Included Containers

[ECUC_BswM_00935] Definition of EcucBooleanParamDef BswMNestedExecutionOnly

Parameter Name	BswMNestedExecutionOnly
Parent Container	BswMRule
Upstream mapping defined	–
Description	This parameter defines for its related Rule if the Rule is an Independent rule or a Subordinate rule; false: an Independent rule, i.e. to be evaluated each time applicable (both as standalone Rule driven by its own BswMModeRequestSource and when referenced by another Rule). true: a Subordinated rule, to be evaluated ONLY as a result of being referenced in one or more Action Lists.
Multiplicity	1
Type	EcucBooleanParamDef
Default value	false
Pre-Compile only	true

[ECUC_BswM_00888] Definition of EcucEnumerationParamDef BswMRuleInitState

Parameter Name	BswMRuleInitState	
Parent Container	BswMRule	
Upstream mapping defined	–	
Description	This parameter is a part of the reset/initialization behavior of BswM. Action lists are executed when the result of a rule evaluation have changed since the last evaluation. This parameter defines the "previous evaluation result" of a rule to be used after initialization of the BswM. If this parameter is set to BSWM_UNDEFINED, the evaluation result is always treated as changed at the first evaluation of the rule after initialization. If this parameter is set to BSWM_TRUE, the evaluation result is treated as changed if the rule is evaluated to false. If this parameter is set to BSWM_FALSE, the evaluation result is treated as changed if the rule is evaluated to true.	
Multiplicity	1	
Type	EcucEnumerationParamDef	
Range	BSWM_FALSE	False
	BSWM_TRUE	True
	BSWM_UNDEFINED	Undefined
Pre-Compile only	true	

[ECUC_BswM_00819] Definition of EcucReferenceDef BswMRuleExpressionRef

Parameter Name	BswMRuleExpressionRef
Parent Container	BswMRule
Upstream mapping defined	–
Description	This is a reference to the logical expression that is evaluated for each rule.
Multiplicity	1
Type	Reference to BswMLogicalExpression
Pre-Compile only	true

[ECUC_BswM_00818] Definition of EcucReferenceDef BswMRuleFalseActionList

Parameter Name	BswMRuleFalseActionList	
Parent Container	BswMRule	
Upstream mapping defined	–	
Description	This is a reference to the action list that shall be executed when the rule is evaluated to False	
Multiplicity	0..1	
Type	Reference to BswMActionList	
Post-Build Multiplicity	Loadable	Selectable
Post-Build Value	Loadable	Selectable

[ECUC_BswM_00817] Definition of EcucReferenceDef BswMRuleTrueActionList

Parameter Name	BswMRuleTrueActionList	
Parent Container	BswMRule	
Upstream mapping defined	–	
Description	This is a reference to the action list that shall be executed when the rule is evaluated to True	
Multiplicity	0..1	
Type	Reference to BswMActionList	
Post-Build Multiplicity	Loadable	Selectable
Post-Build Value	Loadable	Selectable

C.1.2 BswMLogicalExpression

[ECUC_BswM_00808] Definition of EcucParamConfContainerDef BswMLogical Expression

Container Name	BswMLogicalExpression
Parent Container	BswMArbitration
Upstream mapping defined	–
Description	This container describes the logical expressions that can be used for the mode arbitration. The logical expressions are built of a set of arguments and a logical operator. Each argument can either be a mode condition or a sub-expression to allow definition of more complex logical expressions. There may be an unlimited number of arguments in each logical expression. Note that the order of evaluation of the expressions is not defined.
Multiplicity	0..*
Pre-Compile only	true
Configuration Parameters	

Included Parameters		
Parameter Name	**Multiplicity**	**ECUC ID**
BswMLogicalOperator	0..1	[ECUC_BswM_00814]
BswMArgumentRef	1..*	[ECUC_BswM_00820]

No Included Containers

[ECUC_BswM_00814] Definition of EcucEnumerationParamDef BswMLogicalOperator

Parameter Name	BswMLogicalOperator
Parent Container	BswMLogicalExpression
Upstream mapping defined	–
Description	This parameter specifies the logical operator to be used in the logical expression. If the logical operator is set to something other than BSWM_NOT, and the expression only consists of a single condition, then this parameter will have no effect.
Multiplicity	0..1
Type	EcucEnumerationParamDef

▽

△

Range	BSWM_AND	And (&&)
	BSWM_NAND	Not And (NAND)
	BSWM_NOT	Not (!)
	BSWM_OR	Or (||)
	BSWM_XOR	Exclusive Or (XOR)
Pre-Compile only	true	

[ECUC_BswM_00820] Definition of EcucChoiceReferenceDef BswMArgumentRef

Parameter Name	BswMArgumentRef
Parent Container	BswMLogicalExpression
Upstream mapping defined	–
Description	This is a choice reference either to a mode condition or a sub-expression. In case the BswMLogicalExpression.BswMLogicalOperator equals BSWM_NAND only two operands are supported. In case the BswMLogicalExpression.BswMLogical Operator equals BSWM_NOT only one operand is supported.
Multiplicity	1..*
Type	Choice reference to [BswMLogicalExpression, BswMModeCondition]
Pre-Compile only	true

C.1.3 BswMModeRequestPort

[ECUC_BswM_00805] Definition of EcucParamConfContainerDef BswMModeRequestPort

Container Name	BswMModeRequestPort
Parent Container	BswMArbitration
Upstream mapping defined	–
Description	Each instance of this container defines a mode request interface that is used to requests or indicate modes from/to the BswM. These interfaces are implemented as ports or as ordinary C-functions based upon if the request is made by an SW-C or a BSW module. There are different types of mode requests: 1. Mode requests from the SW-C:s 2. Mode Requests from other BSW modules such as the DCM. 3. State/mode indications from the RTE or other BSW modules such as the bus specific State Managers. Note that the BswM treats all request and indications in the exact same way.
Multiplicity	0..*
Pre-Compile only	true
Configuration Parameters	

Included Parameters		
Parameter Name	**Multiplicity**	**ECUC ID**
BswMRequestProcessing	1	[ECUC_BswM_00822]

Included Containers		
Container Name	**Multiplicity**	**Description**
BswMModeInitValue	0..1	This container defines the initial mode value that is used by Bsw M for the corresponding mode request after initialization. The initial mode value is defined by configuring either BswMBsw ModeInitValue or BswMCompuScaleModeValue. This container is optional.
BswMModeRequestSource	1	This choice container specifies the source of the mode request or state/mode indication. The requester of a mode can be both SW-C:s and other BSW Modules, such as the bus specific State Managers.

[ECUC_BswM_00822] Definition of EcucEnumerationParamDef BswMRequest Processing

Parameter Name	BswMRequestProcessing	
Parent Container	BswMModeRequestPort	
Upstream mapping defined	–	
Description	This parameter defines if the processing of the mode arbitration shall be done immediately when a mode request is received or if it shall be deferred to the processing of the main function of BswM.	
Multiplicity	1	
Type	EcucEnumerationParamDef	
Range	BSWM_DEFERRED	Deferred
	BSWM_IMMEDIATE	Immediate
Pre-Compile only	true	

C.1.4 BswMActionList

[ECUC_BswM_00809] Definition of EcucParamConfContainerDef BswMAction List

Container Name	BswMActionList	
Parent Container	BswMModeControl	
Upstream mapping defined	–	
Description	Each instance of this container defines an action list that is invoked based on the BswM Rules. An action list contains a list of numbered action items to be processed. An action list can also include other action lists.	
Multiplicity	0..*	
Post-Build Multiplicity	Loadable	Selectable
Configuration Parameters		

Included Parameters		
Parameter Name	**Multiplicity**	**ECUC ID**
BswMActionListExecution	1	[ECUC_BswM_00894]
BswMActionListPriority	0..1	[ECUC_BswM_01076]

Included Containers		
Container Name	**Multiplicity**	**Description**
BswMActionListItem	1..*	This container defines an item in an action list.

[ECUC_BswM_00894] Definition of EcucEnumerationParamDef BswMActionList Execution

Parameter Name	BswMActionListExecution	
Parent Container	BswMActionList	
Upstream mapping defined	–	
Description	This parameter controls if the corresponding action list shall be executed every time the rule is evaluated or only when the result of the evaluation changes. This parameter does not have an effect when this action list is executed within another action list.	
Multiplicity	1	
Type	EcucEnumerationParamDef	
Range	BSWM_CONDITION	Action list shall be executed every time the rule is evaluated.
	BSWM_TRIGGER	Action list shall be executed every time the result of the evaluation changes.
Pre-Compile only	true	

[ECUC_BswM_01076] Definition of EcucIntegerParamDef BswMActionListPriority

Parameter Name	BswMActionListPriority	
Parent Container	BswMActionList	
Upstream mapping defined	–	
Description	This controls the order of execution, in the case when multiple action lists are executed during a single mode control cycle. Highest priority action list will be executed first. Zero (0) is lowest priority, and 255 is highest priority.	
Multiplicity	0..1	
Type	EcucIntegerParamDef	
Range	0 .. 255	
Default value	0	
Pre-Compile only	true	

C.1.5 BswMAction

[ECUC_BswM_00810] Definition of EcucParamConfContainerDef BswMAction

Container Name	BswMAction
Parent Container	BswMModeControl
Upstream mapping defined	–
Description	Each container of this type defines an action. These actions can be part of one or several action lists.
Multiplicity	0..*
Pre-Compile only	true
Configuration Parameters	

No Included Parameters

Included Containers		
Container Name	**Multiplicity**	**Description**
BswMAvailableActions	1	Choice container including the available actions to be used in the action lists.

C.1.6 BswMSwitchPort

[ECUC_BswM_00950] Definition of EcucParamConfContainerDef BswMSwitch Port

Container Name	BswMSwitchPort
Parent Container	BswMModeControl
Upstream mapping defined	–
Description	Represents an output mode-switch port to be generated by the BswM. If BswMMode SwitchInterfaceRef is configured then a PPortPrototype is generated in the SWCD. If BswMSchMModeDeclarationGroupRef is configured then a ModeDeclarationGroup Prototype is generated in the ProvidedModeGroups of the BSWMD. If both BswMMode SwitchInterfaceRef and BswMSchMModeDeclarationGroupRef are configured then an SwcBswSynchronizedModeGroupPrototype is also generated in the BSWMD (see Chapter 6.11 of the BSW Module Description Template SWS and EXP ModemanagementGuide)..
Multiplicity	0..*
Pre-Compile only	true
Configuration Parameters	

Included Parameters		
Parameter Name	**Multiplicity**	**ECUC ID**
BswMModeSwitchInterfaceRef	0..1	[ECUC_BswM_00951]
BswMSchMModeDeclarationGroupRef	0..1	[ECUC_BswM_01031]

No Included Containers

[ECUC_BswM_00951] Definition of EcucForeignReferenceDef BswMModeSwitch InterfaceRef

Parameter Name	BswMModeSwitchInterfaceRef
Parent Container	BswMSwitchPort
Upstream mapping defined	[6, CP_TPS_SoftwareComponentTemplate]
Description	Reference to the ModeSwitchInterface from which the BswM will generate a PPort Prototype.
Multiplicity	0..1
Type	Foreign reference to MODE-SWITCH-INTERFACE
Pre-Compile only	true

[ECUC_BswM_01031] Definition of EcucForeignReferenceDef BswMSchMMode DeclarationGroupRef

Parameter Name	BswMSchMModeDeclarationGroupRef
Parent Container	BswMSwitchPort
Upstream mapping defined	[6, CP_TPS_SoftwareComponentTemplate]
Description	Reference to the ModeDeclarationGroup from which the BswM will generate a Mode DeclarationGroupPrototype.
Multiplicity	0..1
Type	Foreign reference to MODE-DECLARATION-GROUP
Pre-Compile only	true

C.2 MemMap

C.2.1 MemMapAddressingModeSet

[ECUC_MemMap_00002] Definition of EcucParamConfContainerDef MemMapAddressingModeSet

Container Name	MemMapAddressingModeSet
Parent Container	MemMap
Upstream mapping defined	–
Description	Defines a set of addressing modes which might apply to a SwAddrMethod.
Multiplicity	0..*
Pre-Compile only	true
Configuration Parameters	

Included Parameters		
Parameter Name	**Multiplicity**	**ECUC ID**
MemMapSupportedAddressingMethodOption	0..*	[ECUC_MemMap_00009]
MemMapSupportedMemoryAllocationKeywordPolicy	0..*	[ECUC_MemMap_00017]
MemMapSupportedSectionInitializationPolicy	0..*	[ECUC_MemMap_00008]
MemMapSupportedSectionType	0..*	[ECUC_MemMap_00007]

Included Containers		
Container Name	**Multiplicity**	**Description**
MemMapAddressingMode	1..*	Defines a addressing mode with a set of #pragma statements implementing the start and the stop of a section.

[ECUC_MemMap_00009] Definition of EcucStringParamDef MemMapSupported AddressingMethodOption

Parameter Name	MemMapSupportedAddressingMethodOption
Parent Container	MemMapAddressingModeSet
Upstream mapping defined	–

▽

△

Description	This constrains the usage of this addressing mode set for Generic Mappings to swAddr Methods. The attribute option of a swAddrMethod mapped via MemMapGenericMapping to this MemMapAddressingModeSet shall be equal to one of the configured MemMap SupportedAddressMethodOption's
Multiplicity	0..*
Type	EcucStringParamDef
Default value	–
Regular Expression	[a-zA-Z]([a-zA-Z0-9]|_[a-zA-Z0-9])*_?
Pre-Compile only	true

[ECUC_MemMap_00017] Definition of EcucEnumerationParamDef MemMapSupportedMemoryAllocationKeywordPolicy

Parameter Name	MemMapSupportedMemoryAllocationKeywordPolicy	
Parent Container	MemMapAddressingModeSet	
Upstream mapping defined	–	
Description	This constrains the usage of this addressing mode set for Generic Mappings to swAddr Methods. The attribute MemoryAllocationKeywordPolicy of a swAddrMethod mapped via MemMapGenericMapping to this MemMapAddressingModeSet shall be equal to one of the configured MemMapSupportedMemoryAllocationKeywordPolicy's	
Multiplicity	0..*	
Type	EcucEnumerationParamDef	
Range	MEMMAP_ALLOCATION_KEYWORD_POLICY_ADDR_METHOD_SHORT_NAME	The Memory Allocation Keyword is build with the short name of the SwAddrMethod. This is the default value if the atttribute does not exist in the SwAddrMethod.
	MEMMAP_ALLOCATION_KEYWORD_POLICY_ADDR_METHOD_SHORT_NAME_AND_ALIGNMENT	The Memory Allocation Keyword is build with the the short name of the SwAddrMethod and the alignment attribute of the MemorySection. This requests a separation of objects in memory dependent from the alignment and is not applicable for RunnableEntitys and Bsw SchedulableEntitys.
Pre-Compile only	true	

[ECUC_MemMap_00008] Definition of EcucStringParamDef MemMapSupportedSectionInitializationPolicy

Parameter Name	MemMapSupportedSectionInitializationPolicy
Parent Container	MemMapAddressingModeSet
Upstream mapping defined	–

▽

△

Description	This constrains the usage of this addressing mode set for Generic Mappings to swAddr Methods. The sectionIntializationPolicy attribute value of a swAddrMethod mapped via MemMap GenericMapping to this MemMapAddressingModeSet shall be equal to one of the configured MemMapSupportedSectionIntializationPolicy's. Please note that SectionInitializationPolicyType describes the intended initialization of MemorySections. The following values are standardized in AUTOSAR Methodology (see chapter 7.2.1): • INIT • CLEARED • POWER-ON-CLEARED Note: The values are defined similar to the representation of enumeration types in the XML schema to ensure backward compatibility.
Multiplicity	0..*
Type	EcucStringParamDef
Default value	–
Regular Expression	–
Pre-Compile only	true

[ECUC_MemMap_00007] Definition of EcucEnumerationParamDef MemMapSupportedSectionType

Parameter Name	MemMapSupportedSectionType	
Parent Container	MemMapAddressingModeSet	
Upstream mapping defined	–	
Description	This constrains the usage of this addressing mode set for Generic Mappings to swAddr Methods. The attribute sectionType of a swAddrMethod mapped via MemMapGenericMapping or MemMapSectionSpecificMapping to this MemMapAddressingModeSet shall be equal to one of the configured MemMapSupportedSectionType's.	
Multiplicity	0..*	
Type	EcucEnumerationParamDef	
Range	MEMMAP_SECTION_TYPE_CAL_PRM	To be used for calibratable constants of ECU-functions.
	MEMMAP_SECTION_TYPE_CODE	To be used for mapping code to application block, boot block, external flash etc.
	MEMMAP_SECTION_TYPE_CONFIG_DATA	Constants with attributes that show that they reside in one segment for module configuration.
	MEMMAP_SECTION_TYPE_CONST	To be used for global or static constants.
	MEMMAP_SECTION_TYPE_EXCLUDE_FROM_FLASH	Values existing in the ECU but not dropped down in the binary file. No upload should be needed to obtain access to the ECU data. The ECU will never be touched by the instrumentation tool, with the exception of upload. These are memory areas which are not overwritten by downloading the executable.
	MEMMAP_SECTION_TYPE_VAR	To be used for global or static variables. The expected initialization is specified with the attribute sectionInitializationPolicy.
Pre-Compile only	true	

C.2.2 EcucPartition

[ECUC_EcuC_00005] Definition of EcucParamConfContainerDef EcucPartition

Container Name	EcucPartition
Parent Container	EcucPartitionCollection
Upstream mapping defined	[7, CP_TPS_SystemTemplate]
Description	Definition of one Partition on this ECU. One Partition will be implemented using one Os-Application.
Multiplicity	0..*
Pre-Compile only	true
Configuration Parameters	

Included Parameters		
Parameter Name	**Multiplicity**	**ECUC ID**
EcucPartitionId	1	[ECUC_EcuC_00085]
EcucEcuPartitionRef	0..1	[ECUC_EcuC_00083]
EcucPartitionBswModuleDistinguishedPartition	0..*	[ECUC_EcuC_00068]
EcucPartitionCoreRef	1	[ECUC_EcuC_00086]
EcucPartitionSoftwareComponentInstanceRef	0..*	[ECUC_EcuC_00036]

No Included Containers

[ECUC_EcuC_00085] Definition of EcucIntegerParamDef EcucPartitionId

Parameter Name	EcucPartitionId	
Parent Container	EcucPartition	
Upstream mapping defined	–	
Description	ID of the partition.	
Multiplicity	1	
Type	EcucIntegerParamDef	
Range	0 .. 65535	
Default value	–	
Pre-Compile only	true	

[ECUC_EcuC_00083] Definition of EcucForeignReferenceDef EcucEcuPartitionRef

Parameter Name	EcucEcuPartitionRef
Parent Container	EcucPartition
Upstream mapping defined	–
Description	Reference to the EcuPartition to define the link to the partition described in the System description. **Tags:** atp.Status=draft
Multiplicity	0..1
Type	Foreign reference to ECU-PARTITION
Pre-Compile only	true

[ECUC_EcuC_00068] Definition of EcucForeignReferenceDef EcucPartitionBswModuleDistinguishedPartition

Parameter Name	EcucPartitionBswModuleDistinguishedPartition
Parent Container	EcucPartition
Upstream mapping defined	[8, CP_TPS_BSWModuleDescriptionTemplate]
Description	This maps the abstract partition of the Bsw Module to a concrete Partition existing in the ECU.
Multiplicity	0..*
Type	Foreign reference to BSW-DISTINGUISHED-PARTITION
Pre-Compile only	true

[ECUC_EcuC_00086] Definition of EcucReferenceDef EcucPartitionCoreRef

Parameter Name	EcucPartitionCoreRef
Parent Container	EcucPartition
Upstream mapping defined	–
Description	Reference to the core definition. This reference is used to describe to which core the EcucPartition is bound.
Multiplicity	1
Type	Reference to EcucCoreDefinition
Pre-Compile only	true

[ECUC_EcuC_00036] Definition of EcucInstanceReferenceDef EcucPartitionSoftwareComponentInstanceRef

Parameter Name	EcucPartitionSoftwareComponentInstanceRef
Parent Container	EcucPartition
Upstream mapping defined	[6, CP_TPS_SoftwareComponentTemplate]
Description	References the SW Component instances from the Ecu Extract that shall be executed in this partition.
Multiplicity	0..*
Type	Instance reference to SW-COMPONENT-PROTOTYPE context: ROOT-SW-COMPOSITION-PROTOTYPE
Pre-Compile only	true

C.3 Os

C.3.1 OsAlarm

[ECUC_Os_00003] Definition of EcucParamConfContainerDef OsAlarm

Container Name	OsAlarm
Parent Container	Os
Upstream mapping defined	–

▽

△

Description	An OsAlarm may be used to asynchronously inform or activate a specific task. It is possible to start alarms automatically at system start-up depending on the application mode.
Multiplicity	0..*
Pre-Compile only	true
Configuration Parameters	

Included Parameters		
Parameter Name	**Multiplicity**	**ECUC ID**
OsAlarmAccessingApplication	0..*	[ECUC_Os_00004]
OsAlarmCounterRef	1	[ECUC_Os_00005]

Included Containers		
Container Name	**Multiplicity**	**Description**
OsAlarmAction	1	This container defines which type of notification is used when the alarm expires.
OsAlarmAutostart	0..1	If present this container defines if an alarm is started automatically at system start-up depending on the application mode.

[ECUC_Os_00004] Definition of EcucReferenceDef OsAlarmAccessingApplication

Parameter Name	OsAlarmAccessingApplication
Parent Container	OsAlarm
Upstream mapping defined	–
Description	Reference to applications which have an access to this object.
Multiplicity	0..*
Type	Reference to OsApplication
Pre-Compile only	true

[ECUC_Os_00005] Definition of EcucReferenceDef OsAlarmCounterRef

Parameter Name	OsAlarmCounterRef
Parent Container	OsAlarm
Upstream mapping defined	–
Description	Reference to the assigned counter for that alarm
Multiplicity	1
Type	Reference to OsCounter
Pre-Compile only	true

C.3.2 OsApplication

[ECUC_Os_00114] Definition of EcucParamConfContainerDef OsApplication

Container Name	OsApplication
Parent Container	Os
Upstream mapping defined	–
Description	An AUTOSAR OS must be capable of supporting a collection of OS objects (tasks, interrupts, alarms, hooks etc.) that form a cohesive functional unit. This collection of objects is termed an OS-Application. All objects which belong to the same OS-Application have access to each other. Access means to allow to use these objects within API services. Access by other applications can be granted separately.
Multiplicity	0..*
Pre-Compile only	true
Configuration Parameters	

Included Parameters		
Parameter Name	Multiplicity	ECUC ID
OsTrusted	1	[ECUC_Os_00115]
OsTrustedApplicationDelayTimingViolationCall	1	[ECUC_Os_00395]
OsTrustedApplicationWithProtection	1	[ECUC_Os_00394]
OsAppAlarmRef	0..*	[ECUC_Os_00231]
OsAppCounterRef	0..*	[ECUC_Os_00234]
OsAppEcucPartitionRef	1	[ECUC_Os_00392]
OsAppIsrRef	0..*	[ECUC_Os_00221]
OsAppScheduleTableRef	0..*	[ECUC_Os_00230]
OsAppTaskRef	0..*	[ECUC_Os_00116]
OsMemoryMappingCodeLocationRef	0..1	[ECUC_Os_00402]

Included Containers		
Container Name	Multiplicity	Description
OsApplicationHooks	1	Container to structure the OS-Application-specific hooks
OsApplicationTrustedFunction	0..*	Container to structure the configuration parameters of trusted functions

[ECUC_Os_00115] Definition of EcucBooleanParamDef OsTrusted

Parameter Name	OsTrusted
Parent Container	OsApplication
Upstream mapping defined	–
Description	Parameter to specify if an OS-Application is trusted or not. true: OS-Application is trusted false: OS-Application is not trusted (default) Dependency: Required for scalability classes 3 and 4.
Multiplicity	1
Type	EcucBooleanParamDef
Default value	false
Pre-Compile only	true

[ECUC_Os_00395] Definition of EcucBooleanParamDef OsTrustedApplication DelayTimingViolationCall

Parameter Name	OsTrustedApplicationDelayTimingViolationCall
Parent Container	OsApplication
Upstream mapping defined	–
Description	Parameter to specify if a timing violation which occurs within an trusted OS-Application is raised immediately or if it is delayed until the current task returns to the calling OS-Application (return of CallTrustedFunction) true: violation / call to ProtectionHook() is delayed false: timing violation cause an immediate call to the ProtectionHook().
Multiplicity	1
Type	EcucBooleanParamDef
Default value	true
Pre-Compile only	true

[ECUC_Os_00394] Definition of EcucBooleanParamDef OsTrustedApplication WithProtection

Parameter Name	OsTrustedApplicationWithProtection
Parent Container	OsApplication
Upstream mapping defined	–
Description	Parameter to specify if a trusted OS-Application is executed with memory protection or not. true: OS-Application runs within a protected environment. This means that write access is limited. false: OS-Application has full write access (default)
Multiplicity	1
Type	EcucBooleanParamDef
Default value	false
Pre-Compile only	true

[ECUC_Os_00231] Definition of EcucReferenceDef OsAppAlarmRef

Parameter Name	OsAppAlarmRef
Parent Container	OsApplication
Upstream mapping defined	–
Description	Specifies the OsAlarms that belong to the OsApplication.
Multiplicity	0..*
Type	Reference to OsAlarm
Pre-Compile only	true

[ECUC_Os_00234] Definition of EcucReferenceDef OsAppCounterRef

Parameter Name	OsAppCounterRef
Parent Container	OsApplication
Upstream mapping defined	–
Description	References the OsCounters that belong to the OsApplication.
Multiplicity	0..*

▽

△

Type	Reference to OsCounter
Pre-Compile only	true

[ECUC_Os_00392] Definition of EcucReferenceDef OsAppEcucPartitionRef

Parameter Name	OsAppEcucPartitionRef
Parent Container	OsApplication
Upstream mapping defined	–
Description	Denotes which "EcucPartition" is implemented by this "OSApplication".
Multiplicity	1
Type	Reference to EcucPartition
Pre-Compile only	true

[ECUC_Os_00221] Definition of EcucReferenceDef OsAppIsrRef

Parameter Name	OsAppIsrRef
Parent Container	OsApplication
Upstream mapping defined	–
Description	references which OsIsrs belong to the OsApplication
Multiplicity	0..*
Type	Reference to OsIsr
Pre-Compile only	true

[ECUC_Os_00230] Definition of EcucReferenceDef OsAppScheduleTableRef

Parameter Name	OsAppScheduleTableRef
Parent Container	OsApplication
Upstream mapping defined	–
Description	References the OsScheduleTables that belong to the OsApplication.
Multiplicity	0..*
Type	Reference to OsScheduleTable
Pre-Compile only	true

[ECUC_Os_00116] Definition of EcucReferenceDef OsAppTaskRef

Parameter Name	OsAppTaskRef
Parent Container	OsApplication
Upstream mapping defined	–
Description	references which OsTasks belong to the OsApplication
Multiplicity	0..*
Type	Reference to OsTask
Pre-Compile only	true

[ECUC_Os_00402] Definition of EcucForeignReferenceDef OsMemoryMapping CodeLocationRef

Parameter Name	OsMemoryMappingCodeLocationRef
Parent Container	OsApplication, OsApplicationHooks, OsHooks, OsIsr, OsTask
Upstream mapping defined	–
Description	Reference to the memory mapping containing details about the section where the code is placed.
Multiplicity	0..1
Type	Foreign reference to SW-ADDR-METHOD
Pre-Compile only	true

C.3.3 OsCounter

[ECUC_Os_00026] Definition of EcucParamConfContainerDef OsCounter

Container Name	OsCounter
Parent Container	Os
Upstream mapping defined	–
Description	Configuration information for the counters that belong to the OsApplication.
Multiplicity	0..*
Pre-Compile only	true
Configuration Parameters	

Included Parameters		
Parameter Name	**Multiplicity**	**ECUC ID**
OsCounterMaxAllowedValue	1	[ECUC_Os_00027]
OsCounterMinCycle	1	[ECUC_Os_00028]
OsCounterTicksPerBase	1	[ECUC_Os_00029]
OsCounterType	1	[ECUC_Os_00255]
OsSecondsPerTick	0..1	[ECUC_Os_00030]
OsCounterAccessingApplication	0..*	[ECUC_Os_00031]

Included Containers		
Container Name	**Multiplicity**	**Description**
OsDriver	0..1	This Container contains the information who will drive the counter. This configuration is only valid if the counter has Os CounterType set to HARDWARE. If the container does not exist (multiplicity=0) the timer is managed by the OS internally (OSINTERNAL). If the container exists the OS can use the GPT interface to manage the timer. The user have to supply the GPT channel. If the counter is driven by some other (external to the OS) source (like a TPU for example) this must be described as a vendor specific extension.

▽

△

Included Containers		
Container Name	**Multiplicity**	**Description**
OsTimeConstant	0..*	Allows the user to define constants which can be e.g. used to compare time values with timer tick values. A time value will be converted to a timer tick value during generation and can later on accessed via the OsConstName. The conversation is done by rounding time values to the nearest fitting tick value.

[ECUC_Os_00027] Definition of EcucIntegerParamDef OsCounterMaxAllowed Value

Parameter Name	OsCounterMaxAllowedValue	
Parent Container	OsCounter	
Upstream mapping defined	–	
Description	Maximum possible allowed value of the system counter in ticks.	
Multiplicity	1	
Type	EcucIntegerParamDef	
Range	1 .. 18446744073709551615	
Default value	–	
Pre-Compile only	true	

[ECUC_Os_00028] Definition of EcucIntegerParamDef OsCounterMinCycle

Parameter Name	OsCounterMinCycle	
Parent Container	OsCounter	
Upstream mapping defined	–	
Description	The MINCYCLE attribute specifies the minimum allowed number of counter ticks for a cyclic alarm linked to the counter.	
Multiplicity	1	
Type	EcucIntegerParamDef	
Range	1 .. 18446744073709551615	
Default value	–	
Pre-Compile only	true	

[ECUC_Os_00029] Definition of EcucIntegerParamDef OsCounterTicksPerBase

Parameter Name	OsCounterTicksPerBase	
Parent Container	OsCounter	
Upstream mapping defined	–	
Description	The TICKSPERBASE attribute specifies the number of ticks required to reach a counterspecific unit. The interpretation is implementation-specific.	
Multiplicity	1	
Type	EcucIntegerParamDef	
Range	1 .. 4294967295	
Default value	–	
Pre-Compile only	true	

[ECUC_Os_00255] Definition of EcucEnumerationParamDef OsCounterType

Parameter Name	OsCounterType	
Parent Container	OsCounter	
Upstream mapping defined	–	
Description	This parameter contains the natural type or unit of the counter.	
Multiplicity	1	
Type	EcucEnumerationParamDef	
Range	HARDWARE	This counter is driven by some hardware e.g. a hardware timer unit.
	SOFTWARE	The counter is driven by some software which calls the IncrementCounter service.
Pre-Compile only	true	

[ECUC_Os_00030] Definition of EcucFloatParamDef OsSecondsPerTick

Parameter Name	OsSecondsPerTick	
Parent Container	OsCounter	
Upstream mapping defined	–	
Description	Time of one counter tick in seconds.	
Multiplicity	0..1	
Type	EcucFloatParamDef	
Range	[0 .. INF]	
Default value	–	
Pre-Compile only	true	

[ECUC_Os_00031] Definition of EcucReferenceDef OsCounterAccessingApplication

Parameter Name	OsCounterAccessingApplication
Parent Container	OsCounter
Upstream mapping defined	–
Description	Reference to applications which have an access to this object.
Multiplicity	0..*
Type	Reference to OsApplication
Pre-Compile only	true

C.3.4 OsEvent

[ECUC_Os_00033] Definition of EcucParamConfContainerDef OsEvent

Container Name	OsEvent
Parent Container	Os
Upstream mapping defined	–

▽

△

Description	Representation of OS events in the configuration context. Adopted from the ISO 17356-6 specification.
Multiplicity	0..*
Pre-Compile only	true
Configuration Parameters	

Included Parameters		
Parameter Name	**Multiplicity**	**ECUC ID**
OsEventMask	0..1	[ECUC_Os_00034]

No Included Containers

[ECUC_Os_00034] Definition of EcucIntegerParamDef OsEventMask

Parameter Name	OsEventMask
Parent Container	OsEvent
Upstream mapping defined	–
Description	If event mask would be set to AUTO in OIL, this parameter should be omitted here.
Multiplicity	0..1
Type	EcucIntegerParamDef
Range	0 .. 18446744073709551615
Default value	–
Pre-Compile only	true

C.3.5 OsScheduleTable

[ECUC_Os_00141] Definition of EcucParamConfContainerDef OsScheduleTable

Container Name	OsScheduleTable
Parent Container	Os
Upstream mapping defined	–
Description	An OsScheduleTable addresses the synchronization issue by providing an encapsulation of a statically defined set of alarms that cannot be modified at runtime.
Multiplicity	0..*
Pre-Compile only	true
Configuration Parameters	

Included Parameters		
Parameter Name	**Multiplicity**	**ECUC ID**
OsScheduleTableDuration	1	[ECUC_Os_00053]
OsScheduleTableRepeating	1	[ECUC_Os_00144]
OsScheduleTableCounterRef	1	[ECUC_Os_00145]
OsSchTblAccessingApplication	0..*	[ECUC_Os_00054]

Included Containers		
Container Name	**Multiplicity**	**Description**
OsScheduleTableAutostart	0..1	This container specifies if and how the schedule table is started on startup of the Operating System. The options to start a schedule table correspond to the API calls to start schedule tables during runtime.
OsScheduleTableExpiryPoint	1..*	The point on a Schedule Table at which the OS activates tasks and/or sets events
OsScheduleTableSync	0..1	This container specifies the synchronization parameters of the schedule table.

[ECUC_Os_00053] Definition of EcucIntegerParamDef OsScheduleTableDuration

Parameter Name	OsScheduleTableDuration
Parent Container	OsScheduleTable
Upstream mapping defined	–
Description	This parameter defines the modulus of the schedule table (in ticks).
Multiplicity	1
Type	EcucIntegerParamDef
Range	0 .. 18446744073709551615
Default value	–
Pre-Compile only	true

[ECUC_Os_00144] Definition of EcucBooleanParamDef OsScheduleTableRepeating

Parameter Name	OsScheduleTableRepeating
Parent Container	OsScheduleTable
Upstream mapping defined	–
Description	true: first expiry point on the schedule table shall be processed at final expiry point delay ticks after the final expiry point is processed. false: the schedule table processing stops when the final expiry point is processed.
Multiplicity	1
Type	EcucBooleanParamDef
Default value	–
Pre-Compile only	true

[ECUC_Os_00145] Definition of EcucReferenceDef OsScheduleTableCounterRef

Parameter Name	OsScheduleTableCounterRef
Parent Container	OsScheduleTable
Upstream mapping defined	–
Description	This parameter contains a reference to the counter which drives the schedule table.
Multiplicity	1
Type	Reference to OsCounter
Pre-Compile only	true

[ECUC_Os_00054] Definition of EcucReferenceDef OsSchTblAccessingApplication

Parameter Name	OsSchTblAccessingApplication
Parent Container	OsScheduleTable
Upstream mapping defined	–
Description	Reference to applications which have an access to this object.
Multiplicity	0..*
Type	Reference to OsApplication
Pre-Compile only	true

C.3.6 OsScheduleTableExpiryPoint

[ECUC_Os_00143] Definition of EcucParamConfContainerDef OsScheduleTableExpiryPoint

Container Name	OsScheduleTableExpiryPoint
Parent Container	OsScheduleTable
Upstream mapping defined	–
Description	The point on a Schedule Table at which the OS activates tasks and/or sets events
Multiplicity	1..*
Pre-Compile only	true
Configuration Parameters	

Included Parameters		
Parameter Name	**Multiplicity**	**ECUC ID**
OsScheduleTblExpPointOffset	1	[ECUC_Os_00062]

Included Containers		
Container Name	**Multiplicity**	**Description**
OsScheduleTableEventSetting	0..*	Event that is triggered by that schedule table.
OsScheduleTableTaskActivation	0..*	Task that is triggered by that schedule table.
OsScheduleTableTaskReplenish	0..*	Task that is replenished by that expiry point
OsScheduleTblAdjustableExpPoint	0..1	Adjustable expiry point

[ECUC_Os_00062] Definition of EcucIntegerParamDef OsScheduleTblExpPointOffset

Parameter Name	OsScheduleTblExpPointOffset	
Parent Container	OsScheduleTableExpiryPoint	
Upstream mapping defined	–	
Description	The offset from zero (in ticks) at which the expiry point is to be processed.	
Multiplicity	1	
Type	EcucIntegerParamDef	
Range	0 .. 18446744073709551615	

▽

△

Default value	–
Pre-Compile only	true

C.3.7 OsTask

[ECUC_Os_00073] Definition of EcucParamConfContainerDef OsTask

Container Name	OsTask
Parent Container	Os
Upstream mapping defined	[7, CP_TPS_SystemTemplate]
Description	This container represents an ISO 17356 task.
Multiplicity	0..*
Pre-Compile only	true
Configuration Parameters	

Included Parameters		
Parameter Name	**Multiplicity**	**ECUC ID**
OsTaskActivation	1	[ECUC_Os_00074]
OsTaskPeriod	0..1	[ECUC_Os_00404]
OsTaskPriority	1	[ECUC_Os_00075]
OsTaskSchedule	1	[ECUC_Os_00076]
OsMemoryMappingCodeLocationRef	0..1	[ECUC_Os_00402]
OsTaskAccessingApplication	0..*	[ECUC_Os_00077]
OsTaskEventRef	0..*	[ECUC_Os_00078]
OsTaskResourceRef	0..*	[ECUC_Os_00079]

Included Containers		
Container Name	**Multiplicity**	**Description**
OsTaskAutostart	0..1	This container determines whether the task is activated during the system start-up procedure or not for some specific application modes. If the task shall be activated during the system start-up, this container is present and holds the references to the application modes in which the task is auto-started.
OsTaskTimingProtection	0..1	This container contains all parameters regarding timing protection of the task.

[ECUC_Os_00074] Definition of EcucIntegerParamDef OsTaskActivation

Parameter Name	OsTaskActivation
Parent Container	OsTask
Upstream mapping defined	–
Description	This attribute defines the maximum number of queued activation requests for the task. A value equal to "1" means that at any time only a single activation is permitted for this task. Note that the value must be a natural number starting at 1.
Multiplicity	1

▽

△

Type	EcucIntegerParamDef	
Range	1 .. 4294967295	
Default value	–	
Pre-Compile only	true	

[ECUC_Os_00404] Definition of EcucFloatParamDef OsTaskPeriod

Parameter Name	OsTaskPeriod	
Parent Container	OsTask	
Upstream mapping defined	[7, CP_TPS_SystemTemplate]	
Description	This parameter specifies the period in seconds of this task in case of a cyclically activated task. If this parameter is not given the task can be activated sporadicly or cyclically with a unknown period value. This value is information, e.g. for time base calculations in the RTE in case Timing Events are mapped onto this OsTask.Be aware, that this parameter is not supposed to be relevant for the OS! This information is given as part of the OS configuration to support configuration work flows using a fixed set of OsTasks.	
Multiplicity	0..1	
Type	EcucFloatParamDef	
Range	[-INF .. INF]	
Default value	–	
Pre-Compile only	true	

[ECUC_Os_00075] Definition of EcucIntegerParamDef OsTaskPriority

Parameter Name	OsTaskPriority	
Parent Container	OsTask	
Upstream mapping defined	[7, CP_TPS_SystemTemplate]	
Description	The priority of a task is defined by the value of this attribute. This value has to be understood as a relative value, i.e. the values show only the relative ordering of the tasks. ISO 17356-3 defines the lowest priority as zero (0); larger values correspond to higher priorities.	
Multiplicity	1	
Type	EcucIntegerParamDef	
Range	0 .. 4294967295	
Default value	–	
Pre-Compile only	true	

[ECUC_Os_00076] Definition of EcucEnumerationParamDef OsTaskSchedule

Parameter Name	OsTaskSchedule
Parent Container	OsTask
Upstream mapping defined	[7, CP_TPS_SystemTemplate]
Description	The OsTaskSchedule attribute defines the preemptability of the task. If this attribute is set to NON, no internal resources may be assigned to this task.

▽

△

Multiplicity	1	
Type	EcucEnumerationParamDef	
Range	FULL	Task is preemptable.
	NON	Task is not preemptable.
Pre-Compile only	true	

For parameter table [ECUC_Os_00402] OsMemoryMappingCodeLocationRef, see definition below container OsApplication.

[ECUC_Os_00077] Definition of EcucReferenceDef OsTaskAccessingApplication

Parameter Name	OsTaskAccessingApplication
Parent Container	OsTask
Upstream mapping defined	–
Description	Reference to applications which have an access to this object.
Multiplicity	0..*
Type	Reference to OsApplication
Pre-Compile only	true

[ECUC_Os_00078] Definition of EcucReferenceDef OsTaskEventRef

Parameter Name	OsTaskEventRef
Parent Container	OsTask
Upstream mapping defined	–
Description	This reference defines the list of events the extended task may react on.
Multiplicity	0..*
Type	Reference to OsEvent
Pre-Compile only	true

[ECUC_Os_00079] Definition of EcucReferenceDef OsTaskResourceRef

Parameter Name	OsTaskResourceRef
Parent Container	OsTask
Upstream mapping defined	–
Description	This reference defines a list of resources accessed by this task.
Multiplicity	0..*
Type	Reference to OsResource
Pre-Compile only	true

D Referenced C-API

D.1 RTE

D.1.1 RTE Lifecycle API Reference

D.1.1.1 Rte_Init

[SWS_Rte_91142] Definition of API function Rte_Init_<InitContainer>

Service Name	Rte_Init_<InitContainer>

Syntax	`void Rte_Init_<InitContainer> (`
	`  void`
	`)`

Service ID [hex]	0x75
Sync/Async	Synchronous
Reentrancy	Non Reentrant
Parameters (in)	None
Parameters (inout)	None
Parameters (out)	None
Return value	None
Description	Rte_Init is intended schedule RunnableEntitys for initialization purpose which are mapped to the related RteInitializationRunnableBatch container.
Available via	Rte.h

D.1.1.2 Rte_Start

[SWS_Rte_91137] Definition of API function Rte_Start_<EcucPartition>

Service Name	Rte_Start_<EcucPartition>	

Syntax	`Std_ReturnType Rte_Start_<EcucPartition> (`
	`  void`
	`)`	

Service ID [hex]	0x70	
Sync/Async	Synchronous	
Reentrancy	Non Reentrant	
Parameters (in)	None	
Parameters (inout)	None	
Parameters (out)	None	
Return value	Std_ReturnType	`RTE_E_OK`: No error occurred. `RTE_E_LIMIT`: An internal limit has been exceeded. The allocation of a required resource has failed.
Description	Rte_Start is intended to allocate and initialize system resources and communication resources used by the RTE in the given partition.	
Available via	Rte.h	

D.1.2 RTE RIPS API Reference

D.1.2.1 Rte_Rips_DataIsUpdated

[SWS_Rte_91119] Definition of API function Rte_Rips_<PlugIn>_DataIsUpdated_<SwcBswI>_<CGI>

Service Name	Rte_Rips_<PlugIn>_DataIsUpdated_<SwcBswI>_<CGI>	
Syntax	`boolean Rte_Rips_<PlugIn>_DataIsUpdated_<SwcBswI>_<CGI> ( void )`	
Service ID [hex]	0xB4	
Sync/Async	Synchronous	
Reentrancy	Reentrant	
Parameters (in)	None	
Parameters (inout)	None	
Parameters (out)	None	
Return value	boolean	The return value is used to indicate if the data has been updated or not.
Description	The Rte_Rips_DataIsUpdated API provides access to the update flag for an explicit receiver	
Available via	Rte_Rips_<PlugIn>_<SwcBswI>.h	

D.1.2.2 Rte_Rips_DRead

[SWS_Rte_91122] Definition of API function Rte_Rips_<PlugIn>_DRead_<SwcBswI>[Partition][_<ExE>]_<CGI>

Service Name	Rte_Rips_<PlugIn>_DRead_<SwcBswI>[Partition][_<ExE>]_<CGI>	
Syntax	`<return> Rte_Rips_<PlugIn>_DRead_<SwcBswI>[Partition][_<ExE>]_<CGI> ( void )`	
Service ID [hex]	0xFF	
Sync/Async	Synchronous	
Reentrancy	Reentrant	
Parameters (in)	None	
Parameters (inout)	None	
Parameters (out)	None	
Return value	<return>	Return value provides access to the data value of the Variable DataPrototype. For details of the <return> value definition see section 5.2.6.6.
Description	Rte_Rips_DRead Performs an "explicit" read on a sender-receiver communication data element typed by a primitive data type.	
Available via	Rte_Rips_<PlugIn>_<SwcBswI>.h	

D.1.2.3 Rte_Rips_DataIsUpdated_EventActivation

[SWS_Rte_91000] Definition of API function Rte_Rips_<PlugIn>_DataIsUpdated EventActivation_<SwcBswI>_<DR>_<CGI>

Service Name	Rte_Rips_<PlugIn>_DataIsUpdatedEventActivation_<SwcBswI>_<DR>_<CGI>	
Syntax	`boolean Rte_Rips_<PlugIn>_DataIsUpdatedEventActivation_<SwcBsw I>_<DR>_<CGI> ( void )`	
Service ID [hex]	0xB5	
Sync/Async	Synchronous	
Reentrancy	Reentrant	
Parameters (in)	None	
Parameters (inout)	None	
Parameters (out)	None	
Return value	boolean	The return value is used to indicate if the Runnable shall be activated or not.
Description	The Rte_Rips_DataIsUpdated_EventActivation API indicates the RTE to activate the Runnable Entity triggered by DataReceivedEvent when the related VariableDataPrototype has been updated	
Available via	Rte_Rips_<PlugIn>.h	

D.1.2.4 Rte_Rips_Feedback

[SWS_Rte_91121] Definition of API function Rte_Rips_<PlugIn>_Feedback_[<SwcBswI>][Partition]_<CGI>

Service Name	Rte_Rips_<PlugIn>_Feedback_[<SwcBswI>][Partition]_<CGI>	
Syntax	`Std_ReturnType Rte_Rips_<PlugIn>_Feedback_[<SwcBswI>][Partition]_<CGI> ( void )`	
Service ID [hex]	0xB6	
Sync/Async	Synchronous	
Reentrancy	Reentrant	
Parameters (in)	None	
Parameters (inout)	None	
Parameters (out)	None	
Return value	Std_ReturnType	The return value is used to pass error notifications.
Description	The Rte_Rips_Feedback API provides access to acknowledgment notifications for explicit and implicit sender-receiver communication and to pass error notification to senders in a Software Cluster	
Available via	Rte_Rips_<PlugIn>_<SwcBswI>.h	

D.1.2.5 Rte_Rips_Invoke

[SWS_Rte_89022] Definition of API function Rte_Rips_<PlugIn>_Invoke_<SwcBswI>_<CGI>

Service Name	Rte_Rips_<PlugIn>_Invoke_<SwcBswI>_<CGI>	

Syntax	`Std_ReturnType Rte_Rips_<PlugIn>_Invoke_<SwcBswI>_<CGI> (`
	`  [IN|IN/OUT|OUT] <data_1>,`
	`  [IN|IN/OUT|OUT] ...,`
	`  [IN|IN/OUT|OUT] <data_n>,`
	`  [Std_TransformerError transformerError]`
	`)`	

Service ID [hex]	0xEC	
Sync/Async	Synchronous	
Reentrancy	Reentrant	
Parameters (in)	<data_1>	The Rte_Rips_Invoke API includes zero or more IN, IN/OUT and OUT parameters according [SWS_Rte_01102] and none in case of triggers
Parameters (inout)	...	The Rte_Rips_Invoke API includes zero or more IN, IN/OUT and OUT parameters according [SWS_Rte_01102] and none in case of triggers
Parameters (out)	<data_n>	The Rte_Rips_Invoke API includes zero or more IN, IN/OUT and OUT parameters according [SWS_Rte_01102] and none in case of triggers
	transformerError	The OUT parameter transformerError contains the transformer error which occurred during execution of the transformer chain.
Return value	Std_ReturnType	The return value is used to indicate communication errors.
Description	Rte_Rips_Invoke performs a transformer or cross cluster invocation for clients or trigger sources.	
Available via	Rte_Rips_<PlugIn>_<SwcBswI>.h	

D.1.2.6 Rte_Rips_InvocationHandler

[SWS_Rte_89015] Definition of API function <name of the Invocation Handler>

Service Name	<name of the Invocation Handler>

Syntax	`void <name of the Invocation Handler> (`
	`  void`
	`)`

Service ID [hex]	0xEE
Sync/Async	Synchronous
Reentrancy	Conditional Reentrant
Parameters (in)	None
Parameters (inout)	None
Parameters (out)	None
Return value	None
Description	Performs invocation of server runnables, hard error runnables, ASCR runnables and triggered runnables via a transformer".
Available via	Rte_Rips_<PlugIn>.h

D.1.2.7 Rte_Rips_Prm

[SWS_Rte_91116] Definition of API function Rte_Rips_<PlugIn>_Prm_<CGI>

Service Name	Rte_Rips_<PlugIn>_Prm_<CGI>	

Syntax	`<return> Rte_Rips_<PlugIn>_Prm_<CGI> (`
	`  void`
	`)`	

Service ID [hex]	0x0100	
Sync/Async	Synchronous	
Reentrancy	Reentrant	
Parameters (in)	None	
Parameters (inout)	None	
Parameters (out)	None	
Return value	<return>	For primitive data types, the Rte_Rips_Prm API returns the parameter value. For composite data types, the Rte_Rips_Prm API returns a reference (in C, a pointer) to the constant parameter.
Description	The Rte_Rips_Prm API provides access to a parameter provided by another Software Cluster	
Available via	Rte_Rips_<PlugIn>_<SwcBswI>.h	

D.1.2.8 Rte_Rips_Read

[SWS_Rte_89020] Definition of API function Rte_Rips_<PlugIn>_Read_[<SwcBswI>][Partition][_<ExE>]_<CGI>

Service Name	Rte_Rips_<PlugIn>_Read_[<SwcBswI>][Partition][_<ExE>]_<CGI>	

Syntax	`Std_ReturnType Rte_Rips_<PlugIn>_Read_[<SwcBswI>][Partition][_<ExE>]_<CGI> (`
	`  OUT <data>,`
	`  [Std_TransformerError transformerError]`
	`)`	

Service ID [hex]	0xEA	
Sync/Async	Synchronous	
Reentrancy	Reentrant	
Parameters (in)	None	
Parameters (inout)	None	
Parameters (out)	<data>	The OUT parameter <data> pass back the received data.
	transformerError	The OUT parameter transformerError contains the transformer error which occurred during execution of the transformer chain.
Return value	Std_ReturnType	The return value is used to indicate communication errors.
Description	Rte_Rips_Read Performs an "explicit" read on a sender-receiver communication data element.	
Available via	Rte_Rips_<PlugIn>_<SwcBswI>.h	

D.1.2.9 Rte_Rips_ReturnResult

[SWS_Rte_89023] Definition of API function Rte_Rips_<PlugIn>_ReturnResult_<SwcBswI>_<CGI>

Service Name	Rte_Rips_<PlugIn>_ReturnResult_<SwcBswI>_<CGI>	

Syntax	`Std_ReturnType Rte_Rips_<PlugIn>_ReturnResult_<SwcBswI>_<CGI> (`
	`  [IN/OUT|OUT] <param_1>,`
	`  [IN/OUT|OUT] <param_n>,`
	`  [Std_TransformerError transformerError]`
	`)`	

Service ID [hex]	0xED	
Sync/Async	Synchronous	
Reentrancy	Reentrant	
Parameters (in)	None	
Parameters (inout)	<param_1>	The Rte_Rips_ReturnResult API includes zero or more IN/OUT and OUT parameters according [SWS_Rte_01111].
Parameters (out)	<param_n>	The Rte_Rips_ReturnResult API includes zero or more IN/OUT and OUT parameters according [SWS_Rte_01111].
	transformerError	The OUT parameter transformerError contains the transformer error which occurred during execution of the transformer chain.
Return value	Std_ReturnType	The return value is used to indicate communication errors
Description	Rte_Rips_ReturnResult get the server results of a performed a transformer or cross cluster invocation for clients.	
Available via	Rte_Rips_<PlugIn>_<SwcBswI>.h	

D.1.2.10 Rte_Rips_Start

[SWS_Rte_89017] Definition of API function Rte_Rips_<PlugIn>_Rte_Start

Service Name	Rte_Rips_<PlugIn>_Rte_Start

Syntax	`void Rte_Rips_<PlugIn>_Rte_Start (`
	`  void`
	`)`

Service ID [hex]	0xF1
Sync/Async	Synchronous
Reentrancy	Non Reentrant
Parameters (in)	None
Parameters (inout)	None
Parameters (out)	None
Return value	None
Description	Rte_Rips_Rte_Start initializes those RTE Implementation Plug-In parts which are relevant for the RTE related operation.
Available via	Rte_Rips_<PlugIn>.h

D.1.2.11 Rte_Rips_Stop

[SWS_Rte_89018] Definition of API function Rte_Rips_<PlugIn>_Rte_Stop

Service Name	Rte_Rips_<PlugIn>_Rte_Stop

Syntax	`void Rte_Rips_<PlugIn>_Rte_Stop (`
	`  void`
	`)`

Service ID [hex]	0xF2
Sync/Async	Synchronous
Reentrancy	Non Reentrant
Parameters (in)	None
Parameters (inout)	None
Parameters (out)	None
Return value	None
Description	Rte_Rips_Rte_Stop deinitializes those RTE Implementation Plug-In parts which are relevant for the RTE related operation.
Available via	Rte_Rips_<PlugIn>.h

D.1.2.12 Rte_Rips_SchM_Deinit

[SWS_Rte_89019] Definition of API function Rte_Rips_SchM_Deinit

Service Name	Rte_Rips_SchM_Deinit

Syntax	`void Rte_Rips_SchM_Deinit (`
	`  void`
	`)`

Service ID [hex]	0xF3
Sync/Async	Synchronous
Reentrancy	Non Reentrant
Parameters (in)	None
Parameters (inout)	None
Parameters (out)	None
Return value	None
Description	Rte_Rips_SchM_Deinit deinitializes those RTE Implementation Plug-In parts which are relevant for the SchM related operations.
Available via	Rte_Rips_<PlugIn>.h

D.1.2.13 Rte_Rips_SchM_Init

[SWS_Rte_89016] Definition of API function Rte_Rips_<PlugIn>_SchM_Init

Service Name	Rte_Rips_<PlugIn>_SchM_Init

Syntax	`void Rte_Rips_<PlugIn>_SchM_Init (`
	`  void`
	`)`

Service ID [hex]	0xF0
Sync/Async	Synchronous
Reentrancy	Non Reentrant
Parameters (in)	None
Parameters (inout)	None
Parameters (out)	None
Return value	None
Description	Rte_Rips_SchM_Init initializes those RTE Implementation Plug-In parts which are relevant for the SchM related operations.
Available via	Rte_Rips_<PlugIn>.h

D.1.2.14 Rte_Rips_SwitchNotificationStatusType

[SWS_Rte_91113] Definition of datatype Rte_Rips_SwitchNotificationStatusType

Name	Rte_Rips_SwitchNotificationStatusType		
Kind	Type		
Derived from	uint8		
Range	RTE_SWITCH_ NOTIFICATION_SKIP	0x00	mode switch notification cannot be dequeued
	RTE_SWITCH_ NOTIFICATION_ ENQUEUED_FIRST	0x01	mode switch notification is enqueued into an empty mode queue
	RTE_SWITCH_ NOTIFICATION_ ENQUEUED_NOT_FIRST	0x02	mode switch notification is enqueued into a non empty mode queue
	RTE_SWITCH_ NOTIFICATION_ ENQUEUE_FAILED	0x03	enqueue operation into a non empty mode queue failed
	RTE_SWITCH_ NOTIFICATION_ DEQUEUED_LAST	0x04	last mode switch notification was enqueued from mode queue
	RTE_SWITCH_ NOTIFICATION_ DEQUEUED_NOT_LAST	0x05	mode switch notification was enqueued from mode queue, further mode switch notifications are in the queue
Description	Status of the en- and dequeue operation on a mode queue		
Available via	Rte_Type.h		

D.1.2.15 Rte_Rips_Switch

[SWS_Rte_91114] Definition of API function Rte_Rips_<PlugIn>_Switch_<BswSwcI>_<MMI>

Service Name	Rte_Rips_<PlugIn>_Switch_<BswSwcI>_<MMI>	

Syntax	`void Rte_Rips_<PlugIn>_Switch_<BswSwcI>_<MMI> (`
	`  Rte_Rips_SwitchNotificationStatusType switchNotificationStatus,`
	`  uint32 previousmode,`
	`  uint32 nextmode`
	`)`	

Service ID [hex]	0xB0	
Sync/Async	Synchronous	
Reentrancy	Reentrant	
Parameters (in)	switchNotificationStatus	Status of the enqueue operation
	previousmode	The value of the ModeDeclaration of the mode being left
	nextmode	The value of the ModeDeclaration of the mode being entered
Parameters (inout)	None	
Parameters (out)	None	
Return value	None	
Description	Rte_Rips_StartModeSwitch notifies the RTE Implementation Plug-In about an enqueue operation in a mode queue.	
Available via	Rte_Rips_<PlugIn>.h	

D.1.2.16 Rte_Rips_DequeueModeSwitch

[SWS_Rte_91115] Definition of API function Rte_Rips_<PlugIn>_DequeueModeSwitch_<MMI>_<OsTask>

Service Name	Rte_Rips_<PlugIn>_DequeueModeSwitch_<MMI>_<OsTask>	

Syntax	`Rte_Rips_SwitchNotificationStatusType Rte_Rips_<PlugIn>_DequeueMode Switch_<MMI>_<OsTask> (`
	`  void`
	`)`	

Service ID [hex]	0xB1	
Sync/Async	Synchronous	
Reentrancy	Reentrant	
Parameters (in)	None	
Parameters (inout)	None	
Parameters (out)	None	
Return value	Rte_Rips_Switch NotificationStatusType	The return value is used indicate the status of the dequeue operation in a mode queue
Description	Rte_Rips_DequeueModeSwitch dequeues a mode switch notification from the mode queue when it is called after the last on-entry ExecutableEntity terminated.	
Available via	Rte_Buffers.h	

D.1.2.17 Rte_Rips_Trigger

[SWS_Rte_91117] Definition of API function Rte_Rips_<PlugIn>_Trigger_<BswSwcI>_<MMI>

Service Name	Rte_Rips_<PlugIn>_Trigger_<BswSwcI>_<MMI>

Syntax	`void Rte_Rips_<PlugIn>_Trigger_<BswSwcI>_<MMI> (`
	`  void`
	`)`

Service ID [hex]	0xB2
Sync/Async	Synchronous
Reentrancy	Reentrant
Parameters (in)	None
Parameters (inout)	None
Parameters (out)	None
Return value	None
Description	Rte_Rips_Trigger notifies the RTE Implementation Plug-In about a raised trigger.
Available via	Rte_Rips_<PlugIn>.h

D.1.2.18 Rte_Rips_Write

[SWS_Rte_89021] Definition of API function Rte_Rips_<PlugIn>_Write_[<SwcBswI>][Partition][_<ExE>]_<CGI>

Service Name	Rte_Rips_<PlugIn>_Write_[<SwcBswI>][Partition][_<ExE>]_<CGI>	

Syntax	`Std_ReturnType Rte_Rips_<PlugIn>_Write_[<SwcBswI>][Partition][_<ExE>]_<CGI> (`
	`  IN <data>,`
	`  [Std_TransformerError transformerError]`
	`)`	

Service ID [hex]	0xEB	
Sync/Async	Synchronous	
Reentrancy	Reentrant	
Parameters (in)	<data>	The IN parameter <data> pass the received data.
Parameters (inout)	None	
Parameters (out)	transformerError	The OUT parameter transformerError contains the transformer error which occurred during execution of the transformer chain.
Return value	Std_ReturnType	The return value is used to indicate communication errors.
Description	Rte_Rips_Write Performs an "explicit" write on a sender-receiver communication data element.	
Available via	Rte_Rips_<PlugIn>_<SwcBswI>.h	

D.1.3 RTE API Reference

See document [9]:

- `Rte_Read`
- `Rte_DRead`

- Rte_IRead
- Rte_Write
- Rte_Call
- Rte_Switch
- Rte_Trigger

D.2 OS

See document [10] and [11] as reference for Os.

- TASK
- ActivateTask
- ChainTask
- TerminateTask
- GetResource
- ReleaseResource
- SuspendOSInterrupts
- ResumeOSInterrupts
- GetSpinlock
- ReleaseSpinlock
- GetApplicationID
- StartScheduleTable
- StopScheduleTable
- Schedule
- DisableAllInterrupts
- EnableAllInterrupts
- SuspendAllInterrupts
- ResumeAllInterrupts
- CallTrustedFunction
- GetCoreID

D.2.1 OS API Reference

D.2.1.1 SwCluC_BManif_GetHandle

[SWS_SwCluC_10020] Definition of API function SwCluC_BManif_GetHandle_<ResourceEntryGroup>_<ResourceEntry>_<Handle>

Service Name	SwCluC_BManif_GetHandle_<ResourceEntryGroup>_<ResourceEntry>_<Handle>	
Syntax	`<handleType> SwCluC_BManif_GetHandle_<ResourceEntryGroup>_<ResourceEntry>_<Handle> ( SwCluC_BManif_HandleIndexType notifierSetIndex )`	
Service ID [hex]	0x10	
Sync/Async	Synchronous	
Reentrancy	Reentrant	
Parameters (in)	notifierSetIndex	Optional parameter for the notifier set index in the range 0.. SWCLUC_BMANIF_MAX_NO_OF_NOTIFIER_ SETS_<Resource Entry Group>_<Resource Entry> -1 It exists if for a notifier handle of a provided resource multiple notifier sets are supported
Parameters (inout)	None	
Parameters (out)	None	
Return value	<handleType>	Pointer or value stored in Binary Manifest for this handle
Description	Returns a handle of a Resource Entry in a Resource Entry Group	
Available via	SwCluC_BManif.h	